STATE OF WISCONSIN
Department of Safety and Professional Services
1400 East Washington Avenue
Madison WI 53703

Governor Scott Walker **Secretary Dave Ross**

Mail to:
PO Box 8368
Madison WI 53708-8368

E-mail: dsps@wisconsin.gov
Web: http://dsps.wi.gov
Phone: 608-266-2112

UNIFORM DWELLING CODE COUNCIL MEETING
Room 121A, 1400 East Washington Avenue, Madison
Contact: Jeff Grothman (608) 266-2112
March 10, 2015

The following agenda describes the issues that the Council plans to consider at the meeting. At the time of the meeting, items may be removed from the agenda. Please consult the resulting meeting minutes for a description of the recommendations of the Council.

AGENDA

9:00 A.M.

CALL TO ORDER – ROLL CALL

A) Adoption of Agenda (1)

B) Approval of Minutes of February 13, 2015 (2-8)

C) Department Update

D) Presentation On Crawl Space Ventilation by Wayne Allen of Sure-Dry Basement Systems, Inc. (9-35)

E) Final Walk-Through of Proposed Draft Rules Based on the July 2014 Dwelling Code Council Report (36-65)

F) Review Prescriptive Deck Standards Draft Rules (66-106)
1. **Discuss comments submitted by Deck Sub-Committee (107)**

G) Council Approval of Proposed Draft of Deck Rules

H) Public Comments

I) Future Business

J) Adjournment

UNIFORM DWELLING COUNCIL
MEETING MINUTES
February 13, 2015

PRESENT: Amy Bliss, Michael Coello, Abe Degnan, Steven Gryboski, Jesse Jerabek, Peter Krabbe, Mike Marthaler, Scott Satula, Mary Schroeder, Brian Wert

EXCUSED: David Dolan-Wallace

STAFF: Jeff Grothman, Policy Director; Dan Smith, Rules Coordinator; Steve Dobratz, Integrated Services Section Chief; Duane Hubeler, UDC Engineering Consultant; and Kimberly Wood, Bureau Assistant

CALL TO ORDER

Michael Coello, Chair, called the meeting to order at 10:03 a.m. A quorum of ten (10) members was confirmed.

ADOPTION OF AGENDA

MOTION: Amy Bliss moved, seconded by Michael Coello, to adopt the agenda as published. Motion carried unanimously.

APPROVAL OF MINUTES

MOTION: Mary Schroeder moved, seconded by Jesse Jerabek, to approve the minutes of May 12, 2014 as published. Motion carried unanimously.

ELECTION OF CHAIRPERSON AND VICE CHAIRPERSON

COUNCIL CHAIR

NOMINATION: Mary Schroeder nominated Michael Coello for the Office of Council Chair.

Jeff Grothman called for nominations three (3) times.

Michael Coello was elected as Chair by unanimous consent.

VICE CHAIR

NOMINATION: Jesse Jerabek nominated Mary Schroeder for the Office of Vice Chair.

Jeff Grothman called for nominations three (3) times.

Mary Schroeder was elected as Vice Chair by unanimous consent.

DRAFT

OVERVIEW OF PROPOSED DRAFT RULES BASED ON THE JULY 2014 DWELLING CODE COUNCIL REPORT WITH COUNCIL DISCUSSION

SPS 320: Administration and Enforcement

MOTION: Mary Schroeder moved, seconded by Amy Bliss, to approve the language in the proposed draft rules pertaining to recommendation 320/1 from the report. Motion carried unanimously.

MOTION: Mary Schroeder moved, seconded by Brian Wert, to approve the language in the proposed draft rules pertaining to recommendation 320/2, except that the word "guard" should be used instead of "guardrail" wherever it occurs in the draft rules. Motion carried unanimously.

MOTION: Mary Schroeder moved, seconded by Mike Marthaler, to approve the recommendation to amend the definition of "stairway" in SPS 320.07 (66) to read: "Stair," "stairs" or "stairway" means one or more risers and necessary treads to form a continuous flight from one elevation to another. Multiple stairways may be connected by use of platforms or landings. Motion carried unanimously.

MOTION: Mary Schroeder moved, seconded by Brain Wert, to approve the language in the proposed draft rules pertaining to recommendation 320/4 with the exception that "platforms or landings connecting them" be removed from SPS 320.07 (66) and that a sentence be added to the end of that subsection reading "Multiple stairways can be connected by platforms and landings". Motion carried unanimously.

MOTION: Jesse Jerabek moved, seconded by Amy Bliss, to approve the language in the proposed draft rules pertaining to recommendation 320/5 with the exception that the phrase "shall include" in SPS 320.09 (5) (b) 2. d. be changed to read "may consist of the Wall Bracing Compliance Worksheet or." Motion carried. Opposed: Scott Satula, Brian Wert

MOTION: Mary Schroeder moved, seconded by Jesse Jerabek, to approve the portion of the proposed draft rules updating the physical and website addresses, but to table all remaining discussion of changes to the standards outlined in recommendation 320/6. Motion carried. Opposed: Scott Satula, Brian Wert

SPS 321: Construction Standards

MOTION: Mary Schroeder moved, seconded by Abe Degnan, to approve the language in the proposed draft rules pertaining to recommendation 321/1. Motion carried unanimously.

MOTION: Mary Schroeder moved, seconded by Mike Marthaler, to approve the language in the proposed draft rules pertaining to recommendation 321/2. Motion carried unanimously.

MOTION: Mary Schroeder moved, seconded by Jesse Jerabek, to approve the language in the proposed draft rules pertaining to recommendation 321/3. Motion carried unanimously.

DRAFT

MOTION: Mary Schroeder moved, seconded by Amy Bliss, to approve the language in the proposed draft rules pertaining to recommendation 321/4. Motion carried unanimously.

MOTION: Mike Coello moved, seconded by Mary Schroeder, to recommend amendment of language as follows in SPS 321.03 (1) (h): "One of the exit doors required in par. (a) may be omitted for a dwelling unit that has one or more egress windows on the first floor. If there are bedrooms, each must have a window which complies with sub. (6)." It was agreed that the separation distance between exits should still apply. Motion carried unanimously.

MOTION: Mary Schroeder moved, seconded by Amy Bliss, to approve the language in the proposed draft rules pertaining to recommendation 321/5. Motion carried unanimously.

MOTION: Mary Schroeder moved, seconded by Brian Wert, to approve the language in the proposed draft rules pertaining to recommendation 321/6. Motion carried unanimously.

MOTION: Brain Wert moved, seconded by Amy Bliss, to approve the language in the proposed draft rules pertaining to recommendation 321/7. Motion carried unanimously.

MOTION: Scott Satula moved, seconded by Brian Wert, to approve the language in the proposed draft rules pertaining to recommendation 321/8. Motion carried unanimously.

MOTION: Mary Schroeder moved, seconded by Jesse Jerabek, to approve the language in the proposed draft rules pertaining to recommendation 321/9. Motion carried unanimously.

MOTION: Scott Satula moved, seconded by Jesse Jerabek, to approve the language in the proposed draft rules pertaining to recommendation 321/10. Motion carried unanimously.

MOTION: Brian Wert moved, seconded by Scott Satula, to approve the language in the proposed draft rules pertaining to recommendations 321/11 – 321/15. Motion carried unanimously.

MOTION: Mary Schroeder moved, seconded by Amy Bliss, to approve the language in the proposed draft rules pertaining to recommendation 321/16. Motion carried unanimously.

MOTION: Brian Wert moved, seconded by Mary Schroeder, to approve the language in the proposed draft rules pertaining to recommendation 321/17 but added the recommendation that SPS 321.04 (3) (c) be revised to read: "If the guard is at a stair, the guard shall extend to at least 36 inches above the floor or to the bottom of a handrail meeting the requirements of SPS 321.04 (3) (b).. Motion carried unanimously.

DRAFT

MOTION: Mike Marthaler moved, seconded by Scott Satula, to approve the recommendation to amend language at SPS 321.04 (4) (c) 1. c. to read: "A landing is not required between a sliding glass door or in-swinging glass door and the top of an exterior stairway of 3 or fewer risers.". Motion carried unanimously.

MOTION: Scott Satula moved, seconded by Brian Wert, to approve the language in the proposed draft rules pertaining to recommendation 321/18. Motion carried unanimously.

MOTION: Brian Wert moved, seconded by Mary Schroeder, to approve the language in the proposed draft rules pertaining to recommendation 321/19. Motion carried unanimously.

MOTION: Mary Schroeder moved, seconded by Peter Krabbe, to approve the language in the proposed draft rules pertaining to recommendation 321/20. Motion carried unanimously.

MOTION: Mary Schroeder moved, seconded by Amy Bliss, to approve the language in the proposed draft rules pertaining to recommendation 321/21, but added a recommendation to add diagrams to the commentary relative to this change. Motion carried unanimously.

MOTION: Brian Wert moved, seconded by Jesse Jerabek, to approve the language in the proposed draft rules pertaining to recommendation SPS 321/22, but agreed to discuss at a later date the implications of this when one of the two structures is two stories. Motion carried unanimously.

MOTION: Amy Bliss moved, seconded by Mary Schroeder, to approve the language in the proposed draft rules pertaining to recommendation 321/23. Motion carried unanimously.

MOTION: Mary Schroeder moved, seconded by Amy Bliss, to approve the language in the proposed draft rules pertaining to recommended 321/24. Motion carried unanimously.

MOTION: Brian Wert moved, seconded by Mike Coello, to approve the language in the proposed draft rules pertaining to recommendation 321/25. Motion carried unanimously.

MOTION: Brian Wert moved, seconded by Amy Bliss, to approve the language in the proposed draft rules pertaining to recommendation 321/26. Motion carried unanimously.

MOTION: Mary Schroeder moved, seconded by Brian Wert, to approve the language in the proposed draft rules pertaining to recommendation 321/27. Motion carried unanimously.

MOTION: Peter Krabbe moved, seconded by Jesse Jerabek, to approve the language in the proposed draft rules pertaining to recommendation 321/28. Motion carried unanimously.

DRAFT

MOTION: Mary Schroeder moved, seconded by Jesse Jerabek, to approve the language in the proposed draft rules pertaining to recommendation 321/29. Motion carried unanimously.

MOTION: Mary Schroeder moved, seconded by Mike Marthaler, to approve the language in the proposed draft rules pertaining to recommendation 321/31. Motion carried unanimously.

MOTION: Mary Schroeder moved, seconded by Amy Bliss, to table consideration of recommendation 321/32 until the meeting following when the pending rule draft is submitted to the Legislature. Motion carried unanimously.

MOTION: Mary Schroeder moved, seconded by Peter Krabbe, to approve the language in the proposed draft rules pertaining to recommendation 321/33 except the portion of SPS 321.24 (3) (f) following "into the gutter", and to table discussion of the remainder of this recommendation until the first meeting in April 2015. Motion carried unanimously.

MOTION: Jesse Jerabek moved, seconded by Peter Krabbe, to approve the recommendation authorizing Jesse Jerabek to work with Dan Smith to revise the footnotes in Table SPS 321.25–A to more clearly show that wood-stud heights of more than 10 feet must be designed by structural analysis. Motion carried unanimously.

MOTION: Jesse Jerabek moved, seconded by Mary Schroeder, to approve the language in the proposed draft rules pertaining to recommendation 321/37, except that the footnote being added to Table 321.25-J should also be added to Table 321.25-I. Motion carried unanimously.

SPS 322: Energy Conservation

MOTION: Mary Schroeder moved, seconded by Amy Bliss, to approve the language in the proposed draft rules pertaining to recommendation 322/1. Motion carried unanimously.

MOTION: Mary Schroeder moved, seconded by Jesse Jerabek, to approve the language in the proposed draft rules pertaining to recommendation322/2. Motion carried unanimously.

MOTION: Brian Wert moved, seconded by Mike Marthaler, to approve the language in the proposed draft rules pertaining to recommendation 322/3. Motion carried. Opposed: Jesse Jerabek

MOTION: Mary Schroeder moved, seconded by Abe Degnan, to recommend that the discussion of recommendation 322/4 be tabled until April 2015. Motion carried unanimously.

MOTION: Mary Schroeder moved, seconded by Peter Krabbe, to approve the language in the proposed draft rules pertaining to recommendation 322/5. Motion carried. Opposed: Abe Degnan

MOTION: Jesse Jerabek moved, seconded by Mary Schroeder, to approve the language in the proposed draft rules pertaining to recommendation 322/6. Motion carried unanimously.

MOTION: Mary Schroeder moved, seconded by Jesse Jerabek, to revise the language in the proposed draft rules pertaining to recommendation 322/7 by changing the words "vertical surface in" in SPS 322.32 (9) (b) to read: "vertical and flared walls of" and to add a sentence to the end of paragraph (b) reading: "Tube skylights shall be insulated per the manufacturer's recommendations". Motion carried unanimously.

MOTION: Jesse Jerabek moved, seconded by Scott Satula, to approve the language in the proposed draft rules pertaining to recommendation 322/8. Motion carried unanimously.

MOTION: Jesse Jerabek moved, seconded by Mike Coello, to withdraw the motion approving recommendation 8 and to authorize Mary Schroeder to work with Dan Smith to work on recommendations for items 8 and 9 with review at the March 2015 meeting. Motion carried unanimously.

MOTION: Brian Wert moved, seconded by Mike Marthaler, to approve the language in Section 106. Motion carried unanimously.

MOTION: Mary Schroeder moved, seconded by Jesse Jerabek, to approve the language in the proposed draft rules pertaining to recommendation 322/10. Motion carried unanimously.

MOTION: Brian Wert moved, seconded by Jesse Jerabek, to approve the language in the proposed draft rules pertaining to recommendation 322/11. Motion carried unanimously.

MOTION: Jesse Jerabek moved, seconded by Scott Satula, to approve the language in the proposed draft rules pertaining to recommendation 322/12. Motion carried unanimously.

SPS 323: Heating, Ventilating and Air Conditioning

MOTION: Mary Schroeder moved, seconded by Steve Gryboski, to approve the language in the proposed draft rules pertaining to recommendation 323/1. Motion carried unanimously.

MOTION: Peter Krabbe moved, seconded by Amy Bliss, to table consideration of recommendation 322/2 until the meeting following when the pending rule draft is submitted to the Legislature. Motion carried. Opposed: Scott Satula, Brian Wert

MOTION: Brian Wert moved, seconded by Jesse Jerabek, to approve the language in the proposed draft rules pertaining to recommendation 323/3. Motion carried unanimously.

MOTION: Scott Satula moved, seconded by Brian Wert, to approve the language in the proposed draft rules pertaining to recommendation 323/4. Motion carried unanimously.

DRAFT

MOTION: Amy Bliss moved, seconded by Mary Schroeder, to table consideration of the recommendation 323/5 until the meeting following when the pending rule draft is submitted to the Legislature. Motion carried unanimously.

MOTION: Brian Wert moved, seconded by Amy Bliss, to approve the language in the proposed draft rules pertaining to recommendation 323/6. Motion carried unanimously.

MOTION: Jesse Jerabek moved, seconded by Scott Satula, to approve the language in the proposed draft rules pertaining to recommendation 323/7. Motion carried unanimously.

MOTION: Abe Degnan moved, seconded by Mike Marthaler, to recommend that SPS 323.14 (2) A. 1. be revised to read: All venting for clothes dryers, including for electric dryers, shall be rigid and smooth-walled. The connection to the dryer shall be per manufacturer's requirements. Motion carried unanimously.

MOTION: Jesse Jerabek moved, seconded by Brian Wert, to approve the language in the proposed draft rules pertaining to 323/9. Motion carried unanimously.

SPS 325: Plumbing

MOTION: Brian Wert moved, seconded by Amy Bliss, to approve the language in the proposed draft rules pertaining to recommendations 325/1 to 325/3. Motion carried unanimously.

ADJOURNMENT

MOTION: Mary Schroeder moved, seconded by Peter Krabbe, to adjourn the meeting. Motion carried unanimously.

The meeting adjourned at 2:51 p.m.

DRAFT

© 2006 Building Science Press All rights of reproduction in any form reserved.

Conditioned Crawl Space Construction, Performance and Codes

Building America Report - 0401

2004-11-02 by Joseph Lstiburek, Building Science Corporation

Abstract:

Conditioned crawl spaces perform better than vented crawl spaces in terms of safety, health, comfort, durability and energy consumption. Conditioned crawl spaces also do not cost more to construct than vented crawl spaces. Existing vented crawl spaces are experiencing serious moisture and mold problems and are costing builders and homeowners significant resources to repair. Despite the obvious problems with existing vented crawl spaces and the obvious benefits of conditioned crawl spaces there is not a significant trend towards the construction of conditioned crawlspaces. One of the reasons typically cited by builders and designers is "the code does not allow me to build unvented crawl spaces". This is both generally correct and misleading. The model codes do not allow the construction of "unvented" crawl spaces – except in very limited circumstances, but they do allow the construction of "conditioned" crawl spaces. The distinction is important and necessary. Four conditioned crawl spaces were constructed and monitored over a 12-month period. The data is presented and used to support the current code requirements for the construction of conditioned crawl spaces.

BUILDING AMERICA

SYSTEMS ENGINEERING APPROACH TO DEVELOPMENT OF ADVANCED RESIDENTIAL BUILDINGS

5.C.2.4 CONDITIONED CRAWL SPACE CONSTRUCTION, PERFORMANCE AND CODES

RE: TASK ORDER NO. KAAX-3-32443-4, 5, AND 6
UNDER
TASK ORDERING AGREEMENT NO. KAR-8-18412-00

MIDWEST RESEARCH INSTITUTE,
NATIONAL RENEWABLE ENERGY LABORATORY DIVISION,
1617 COLE BOULEVARD,
GOLDEN, CO
80401-3393

BUILDING SCIENCE CONSORTIUM
CONSORTIUM LEADER:

BUILDING SCIENCE CORPORATION
70 MAIN STREET, WESTFORD, MA
(978) 589-5100
CONTACT: BETSY PETTIT, AIA

CONSORTIUM MEMBERS:
PULTE/DEL WEBB CORPORATION
DAVID WEEKLEY HOMES
ARTISTIC HOMES
CENTEX HOMES
TECHNICAL OLYMPIC
APRIL-AIRE, INC.
CARRIER
GREENFIBER
DOW CHEMICAL COMPANY
MASCO
CERTAINTEED
FORTIFIBER

NOVEMBER 2, 2004

Conditioned Crawlspace Construction, Performance and Codes

Table of Contents

Abstract....2
Background....2
Constructing Conditioned Crawl Spaces....2
Conditioned Crawl Space Performance....9
Code Language....15
2003 International Mechanical Code....15
2003 International Building Code....15
2004 Supplement to the IECC....16
2004 Supplement To The IRC....16
2003 International Residential Code....17

Abstract

Conditioned crawl spaces perform better than vented crawl spaces in terms of safety, health, comfort, durability and energy consumption. Conditioned crawl spaces also do not cost more to construct than vented crawl spaces. Existing vented crawl spaces are experiencing serious moisture and mold problems and are costing builder's and homeowners significant resources to repair. Despite the obvious problems with existing vented crawl spaces and the obvious benefits of conditioned crawl spaces there is not a significant trend towards the construction of conditioned crawlspaces. One of the reasons typically cited by builders and designers is "the code does not allow me to build unvented crawl spaces". This is both generally correct and misleading. The model codes do not allow the construction of "unvented" crawl spaces – except in very limited circumstances, but they do allow the construction of "conditioned" crawl spaces. The distinction is important and necessary. Four conditioned crawl spaces were constructed and monitored over a 12 month period. The data is presented and used to support the current code requirements for the construction of conditioned crawl spaces.

Background

Crawl space venting is generally viewed as good practice despite the obvious moisture problems that occur when outside air with a dew point higher than interior crawl space surface temperature is permitted to enter a crawl space. Unvented, conditioned crawl spaces with insulation on the perimeter solve this problem. Unvented, conditioned crawl spaces with insulation on the perimeter perform better in terms of safety and health (pest control), comfort (warm floors, uniform temperatures), durability (moisture) and energy consumption than passively vented crawl spaces with sub floor insulation.

Perimeter insulation rather than floor insulation performs better in all climates from an energy conservation perspective. The crawl space temperatures, dew points and relative humidities track that of the house. Crawl spaces insulated on the perimeter are warmer and drier than crawl spaces insulated between the crawl space and the house. Cold surfaces that can condense water are minimized when crawl spaces are conditioned.

Wintertime ventilation makes crawl spaces colder and increases the heat loss from the home – venting crawl spaces wastes energy, and can lead to freezing pipes and uncomfortable floors.

Crawl spaces should be designed and constructed as mini-basements, part of the house – within the conditioned space. They should be insulated on their perimeters and should have a continuous sealed ground cover such as taped polyethylene. They should have perimeter drainage just like a basement when the crawl space ground level is below the ground level of the surrounding grade.

Constructing Conditioned Crawl Spaces

Crawl spaces should be designed and constructed to be dry. A dry crawl space is less likely to have pests and termites and mold. A dry crawl space is therefore safer and healthier than a wet crawl space. Crawl spaces must control rainwater, groundwater and provide drainage for potential plumbing leaks or flooding incidents (Figure 1).

Crawl spaces must always have a drying mechanism. One of the most effective ways to provide a drying mechanism to a crawl space is to condition a crawl space by heating and cooling the crawl space as if the crawl space is included as part of the home. Air must be supplied to the crawl space from the home in order to provide this conditioning. This air can be returned back to the home or it can be exhausted (Figure 2, Figure 3, Figure 4 and Figure 5). Crawl spaces can also be included as part of the home (conditioning them) by connecting them to conditioned basements (Figure 6 and Figure 7).

Crawl spaces must always have a ground cover that prevents evaporation of ground moisture into the crawl space. There are many ways to provide a durable ground cover or liner. The option used depends on the resources available, the frequency of people entering the crawl space to either store possessions or to maintain equipment. One of the

most effective is 6 mil sheet polyethylene that has taped/sealed joints and that is attached to the crawl space perimeter walls. This ground cover must be continuous through piers and supports (Figure 8).

Crawl space perimeter walls should also be insulated. The perimeter walls can be insulated either internally or externally (Figure 9, Figure 10 and Figure 11). When insulating crawl spaces internally (as well as basements) it is important to not leave concrete or masonry exposed in order to control condensation – this is particularly important at perimeter foundation wall "steps" or changes in height (Figure 12). It is similarly necessary to control condensation at rim joist areas. This is best done using rigid insulation installed either externally to the rim joist or internally against the rim joist.

Air permeable insulation such as fiberglass batts, fiberglass blankets or spray applied cellulose should be avoided when insulating crawl space perimeters and rim joist assemblies. The air permeance characteristics of these types of insulations do not prevent moisture laden air from accessing surfaces that may be cold enough to condense water.

Where radon gas is a concern, a soil gas ventilation system can be installed under the ground cover (Figure 13).

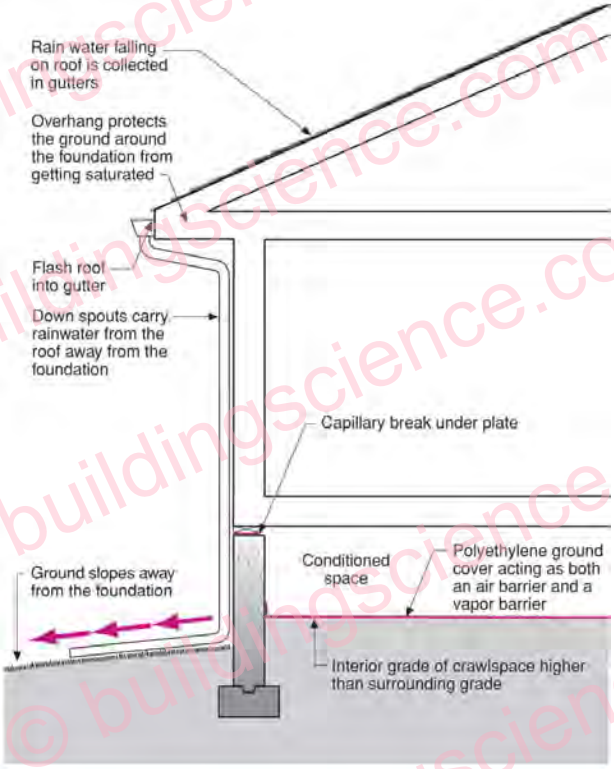

Figure 1
Groundwater Control with Crawlspaces

- Keep rain water away from the foundation perimeter
- If the interior crawlspace is lower than the exterior grade, a sub-grade perimeter footing drain is necessary as in a basement foundation
- The crawlspace in this configuration is conditioned space; it is part of the "interior" of the building and should be heated, cooled and ventilated as part of the building's heating, cooling and ventilating strategy

© buildingscience.com

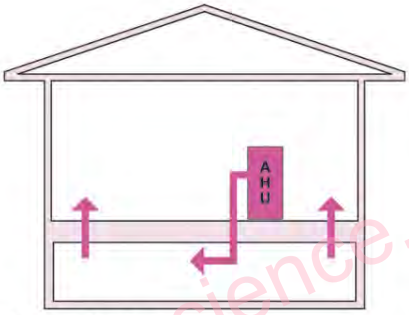

A: Supply air to crawlspace

- Minimum 2-4"x8" transfer grilles **to** house
- 20 cfm of flow per 1,000ft² of crawlspace
- Air handler cycled at 5 minutes per hour

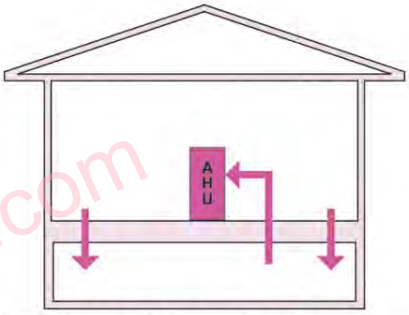

C: Return air from crawlspace

- Minimum 2-4"x8" transfer grilles **from** house
- 20 cfm of flow per 1,000ft² of crawlspace
- Air handler cycled at 5 minutes per hour

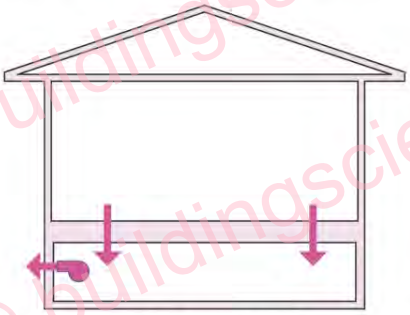

B: Exhaust fan in crawlspace

- Transfer air **from** house
- 20 cfm of flow per 1,000ft² of crawlspace
- Fan sized at ASHRAE 62.2 whole house flow rates:
  7.5 cfm/person + 0.01 cfm/ft² of conditioned area
- For a 2,000ft² 3 bedroom house with 4 occupants:
  4 x 7.5 cfm = 30 cfm
  2,000ft² x 0.01 cfm = 20 cfm
  30 cfm + 20 cfm = 50 cfm (i.e. 50 cfm exhaust fan)
- Fan runs continuously

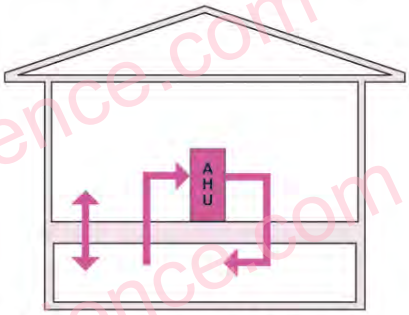

D: Supply and return to crawlspace

- Minimum 2-4"x8" transfer grilles **from** house through floor to equalize air pressure
- 20 cfm of flow per 1,000ft² of crawlspace
- Air handler cycled at 5 minutes per hour

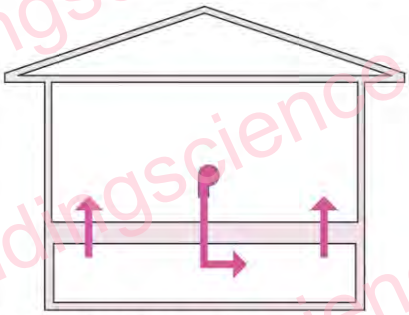

E: Supply air to crawlspace

- Minimum 2-4"x8" transfer grilles **to** house
- 20 cfm of flow per 1,000ft² of crawlspace

Figure 2
Conditioning Crawlspaces

© buildingscience.com

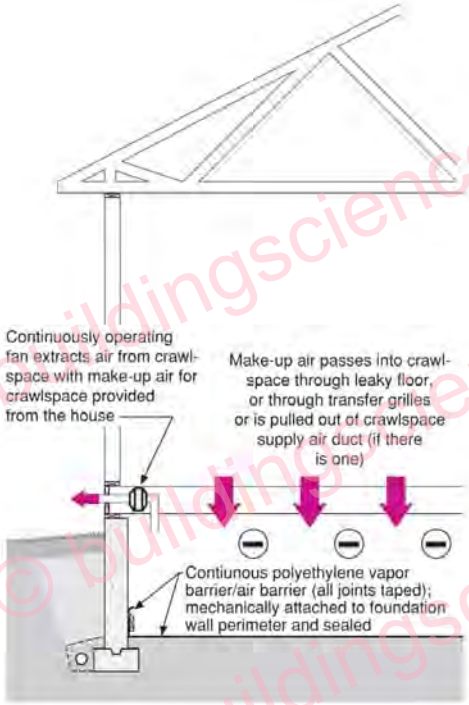

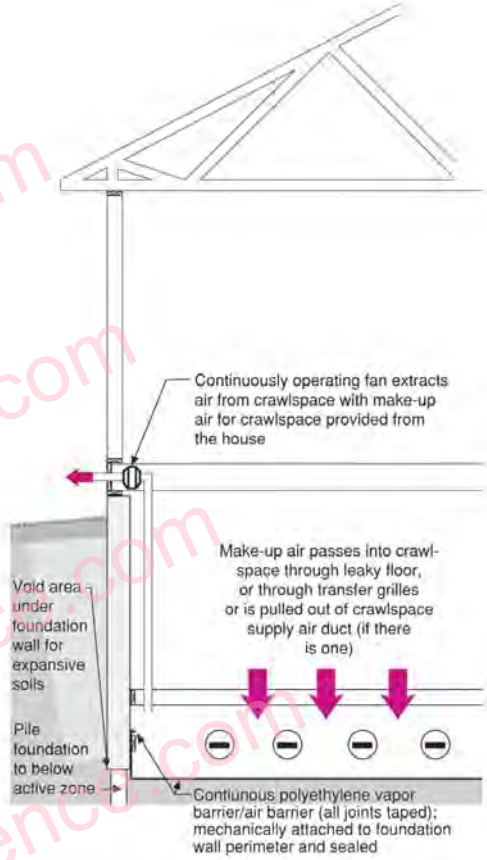

Figure 3
Controlled Mechanical Ventilation, Soil Gas and Crawlspace Ventilation System

- Crawlspace is conditioned (heated during the winter, cooled during the summer) either by make-up air pulled from the house or by a supply HVAC system duct
- Depressurization of crawlspace is facilitated by continuous exhaust from the crawlspace with make-up air for the crawlspace provided from the house common area
- Crawlspace ground cover is tighter than subfloor
- Crawlspace ventilation and house ventilation is provided by a single fan

Figure 4
Combined Controlled Ventilation, Soil Gas and Crawlspace Ventilation System

- Crawlspace is conditioned (heated during the winter, cooled during the summer) either by make-up air pulled from the house or by a supply HVAC system duct
- In regions with expansive soils and suspended wood basement floors over crawlspaces, depressurization of crawlspace can be facilitated by continuous exhaust from the crawlspace with make-up air for the crawlspace provided from the house common area
- Crawlspace ground cover is tighter than subfloor
- Crawlspace ventilation and house ventilation is provided by a single fan

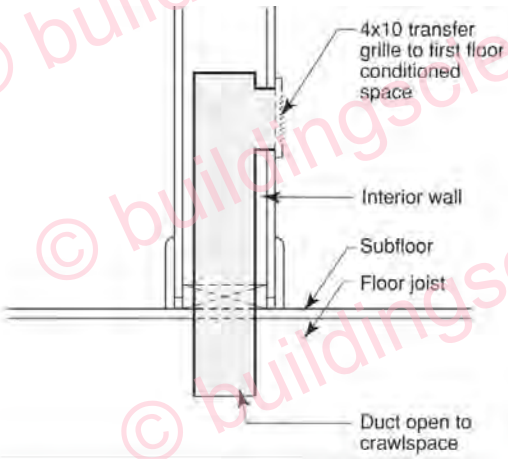

Figure 5
Transfer Grille to Crawlspace

© buildingscience.com

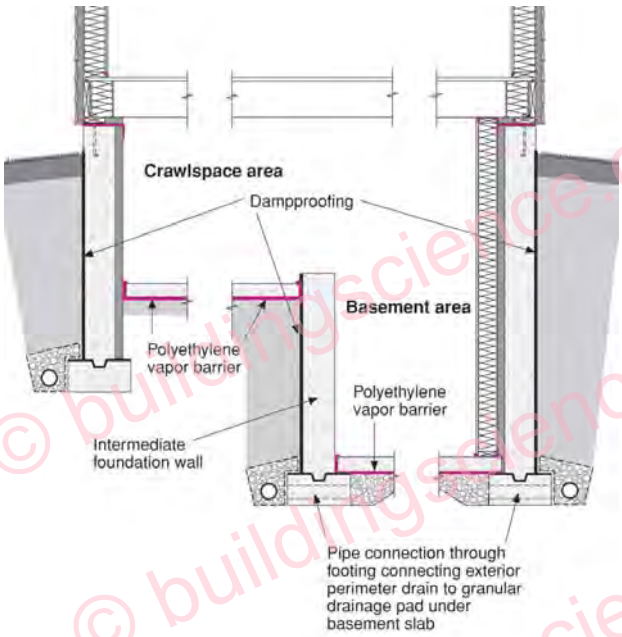

Figure 6
Connecting Crawlspace and Basement

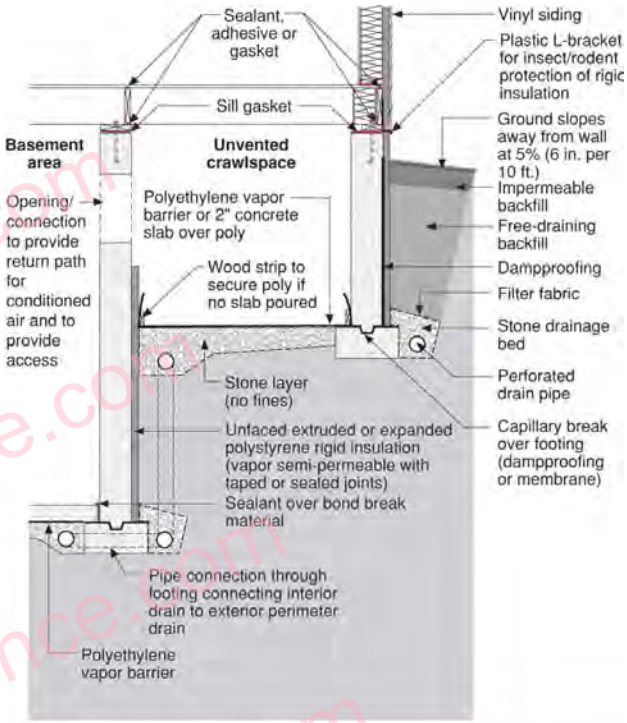

Figure 7
Connecting Crawlspace and Basement

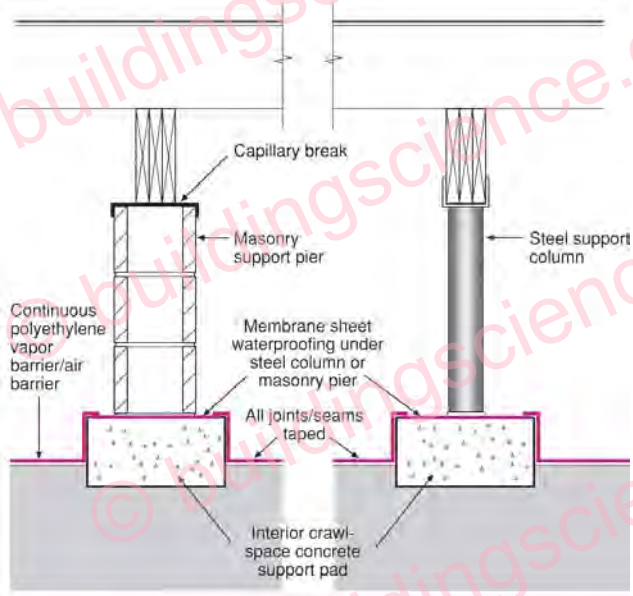

Figure 8
Air Barrier Continuity at Piers

- All joints and seams in polyethylene are taped
- Polyethylene ground cover taped to membrane sheet waterproofing at columns and piers

© buildingscience.com

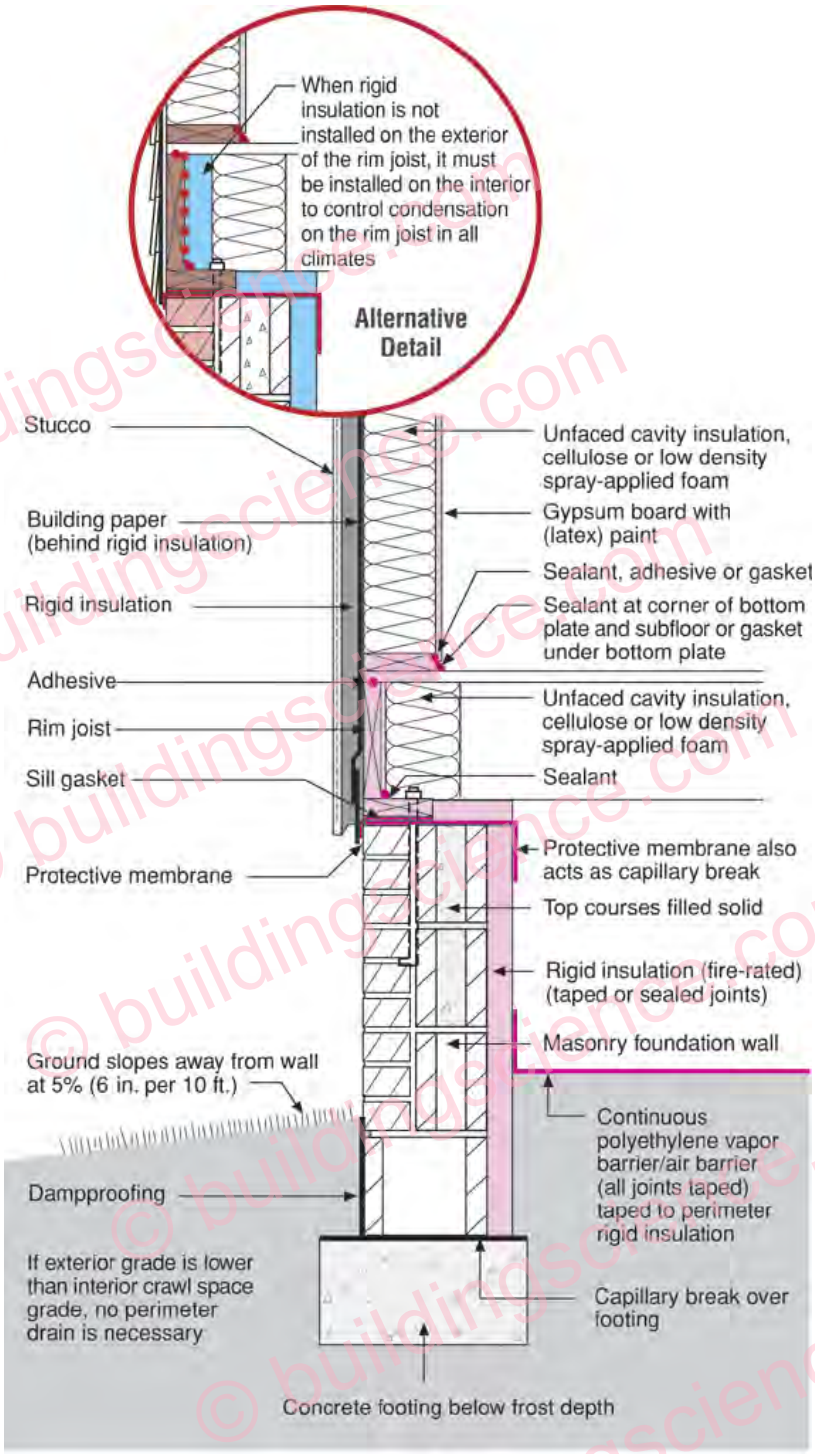

Figure 9
Internally Insulated Concrete Crawlspace with Stucco Wall Above

- Masonry wall can dry to exterior
- Protective membrane acts as termite barrier
- Rigid insulation must be fire-rated if it is left exposed on the interior
- Building paper installed shingle fashion acts as drainage plane located behind rigid insulation

© buildingscience.com

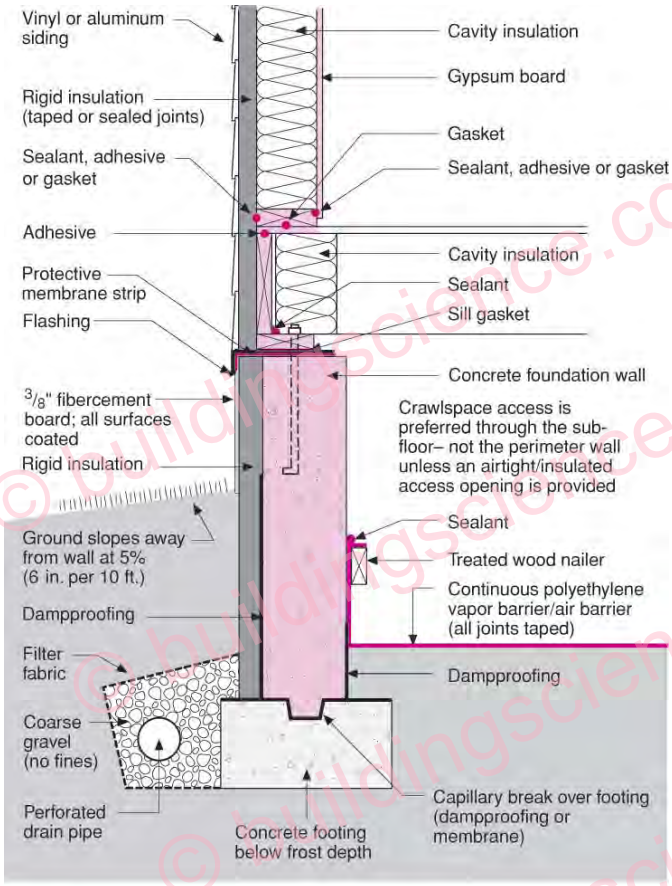

Figure 10
Externally Insulated Concrete Crawlspace with Vinyl or Aluminum Siding Above

- Concrete wall warm, can dry to the interior; extremely low likelihood of mold
- Protective membrane acts as termite barrier
- Perimeter drain is necessary since interior grade is lower than exterior grade
- Protective membrane can be adhesive-backed roll roofing, below grade sheet waterproofing or an ice-dam protection membrane

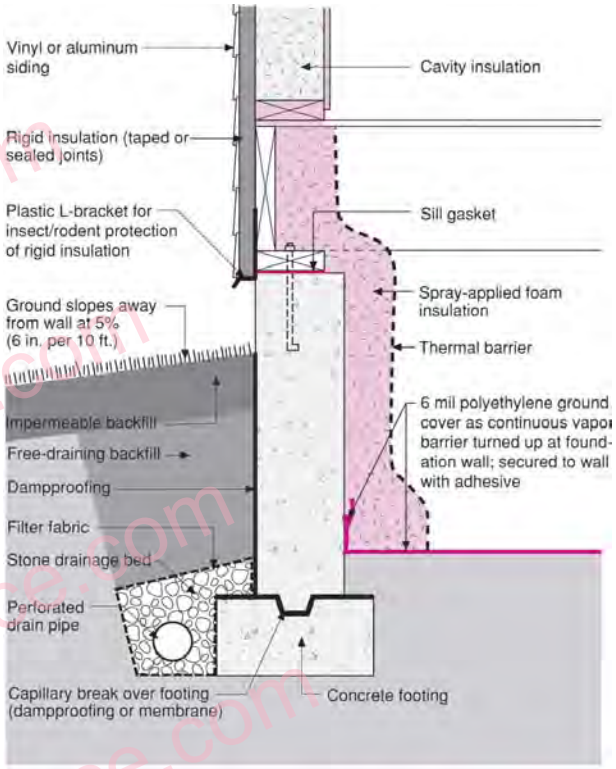

Figure 11
Internally Insulated Concrete Crawlspace with Spray Foam

- A thermal barrier must be installed over spray foam insulations in crawlspaces

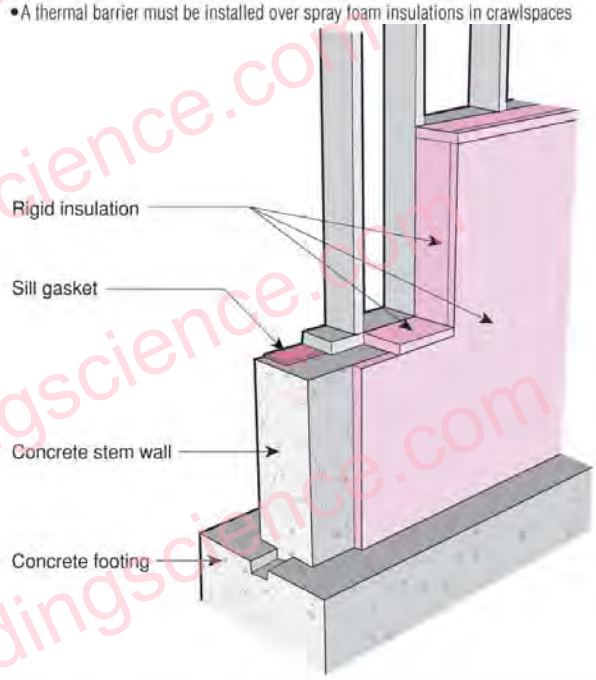

Figure 12
Step Down Foundation Wall

- In basement assemblies and conditioned crawlspace assemblies that are internally insulated, it is important that rigid insulation "wraps" around exposed concrete/block assemblies at "step downs" in order to control condensation, particularly during summer months

© buildingscience.com

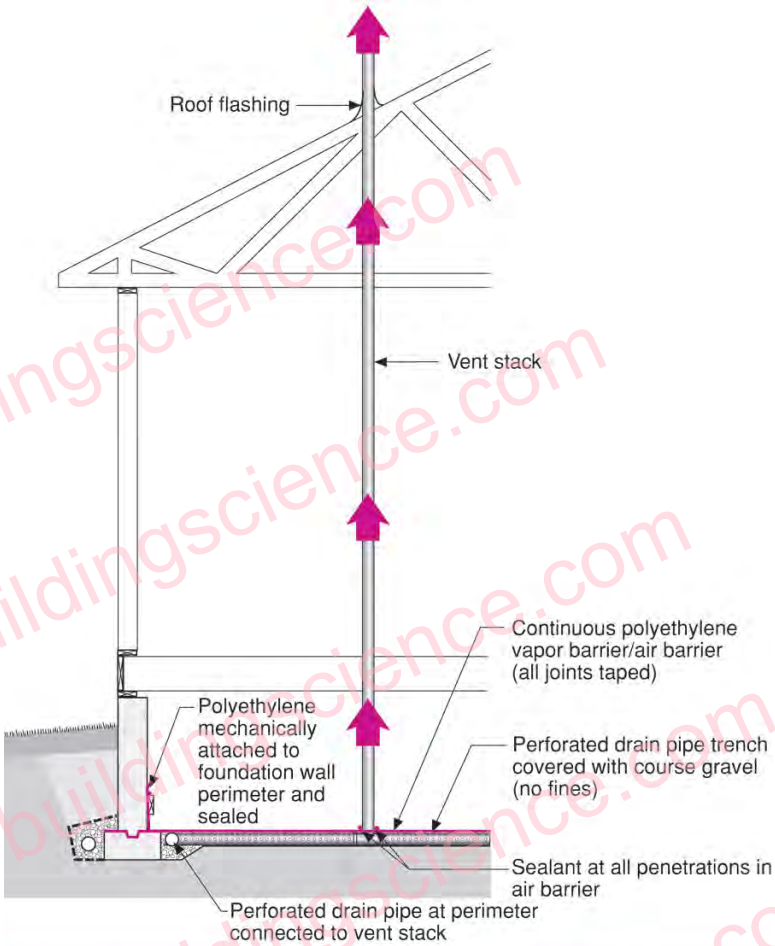

Figure 13
Soil Gas Ventilation System — Crawlspace Construction

- Perforated drain pipe in trenches covered with coarse gravel create depressurized zones under air barrier due to active fan located in attic or by passive stack action of warm vent stack located inside heated space
- Crawlspace is conditioned (heated during the winter, cooled during the summer) by a supply HVAC system duct
- Perforated drain pipe may not be necessary with tightly sealed polyethylene and coarse gravel
- Perimeter trench connected to centrally located vent stack

Conditioned Crawl Space Performance

Three conditioned crawl spaces were constructed in Ohio (one in Cleveland, two in Columbus) and one conditioned crawl space was constructed in Albuquerque, New Mexico. The crawl spaces were monitored over a twelve-month period.

The Cleveland House plots of indoor, outdoor and crawl space temperature are presented in Graph 1. Note how closely the crawl space temperature tracks the indoor temperature. The Cleveland House has an active supply duct providing conditioned air to the crawl space. Transfer grilles provide a return path to the indoor space above the crawl space.

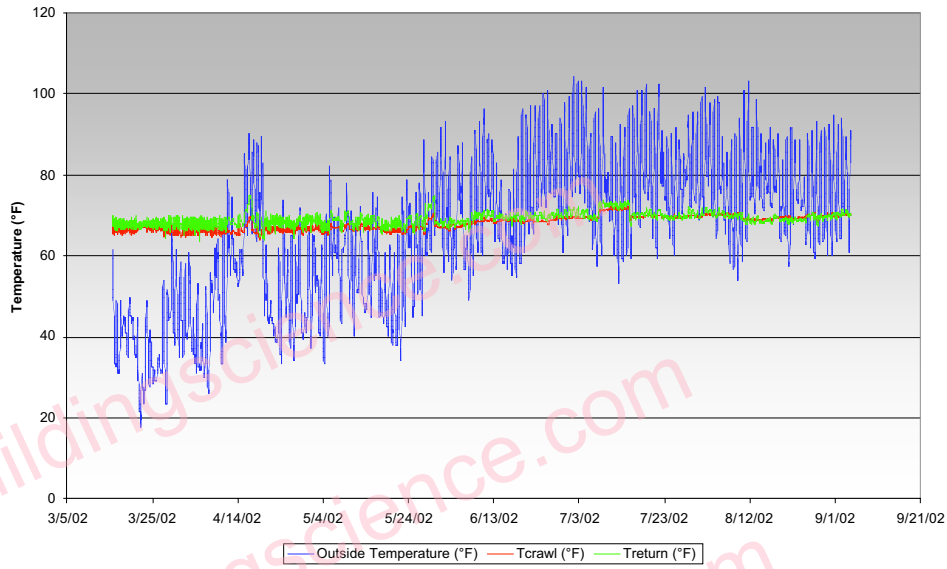

Graph 1: Cleveland House Indoor, Outdoor, and Crawlspace Temperatures

The Cleveland House plots of indoor, outdoor and crawl space dew point temperature are presented in Graph 2. Again note how closely the crawl space dew point tracks the indoor dew point.

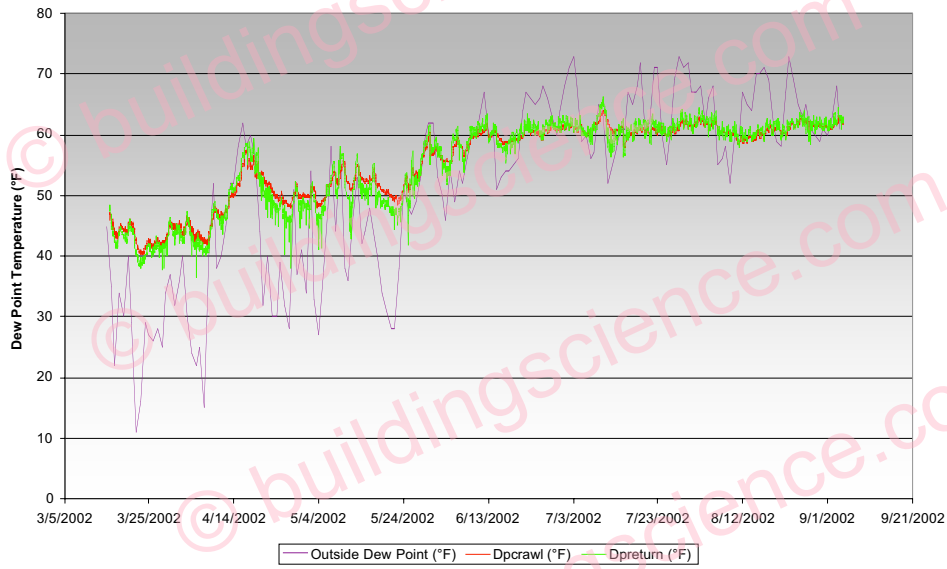

Graph 2: Cleveland House Indoor, Outdoor, and Crawlspace Dew Point Temperatures

The Cleveland House plots of indoor relative humidity and crawl space relative humidity are presented in Graph 3. The crawl space relative humidity again closely tracks the indoor relative humidity.

© buildingscience.com

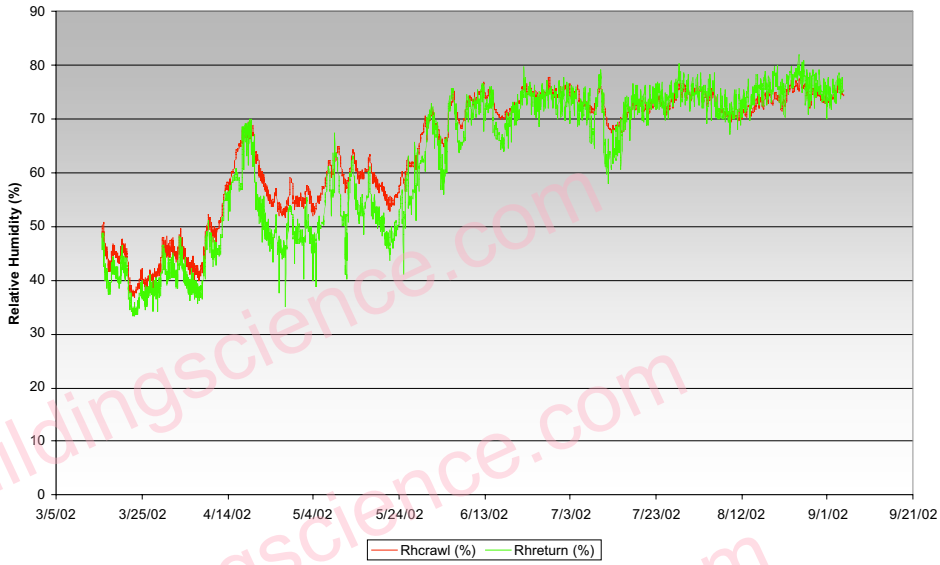

Graph 3: Cleveland House Indoor and Crawlspace Relative Humidity

The Gates House (Columbus) plots of indoor, outdoor and crawl space temperature are presented in Graph 4. In this home, the crawl space is somewhat cooler than the indoor temperature by 5 to 10 degrees. The Gates house crawl space is "passively" connected to the interior with transfer grilles only (no supply duct was provided to the crawl space).

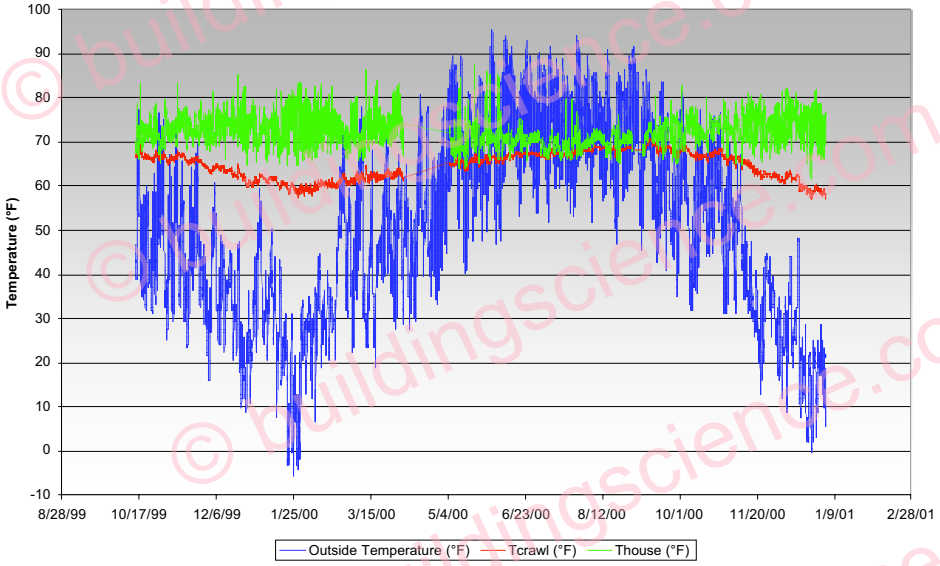

Graph 4: Gates House (Columbus) Indoor, Outdoor, and Crawlspace Temperatures

The Gates House (Columbus) plots of indoor, outdoor and crawl space dew point temperature are presented in Graph 5. The crawl space dew point is consistently higher than the indoor dew point. Again, however, the crawl space dew point does track the indoor dew point.

© buildingscience.com

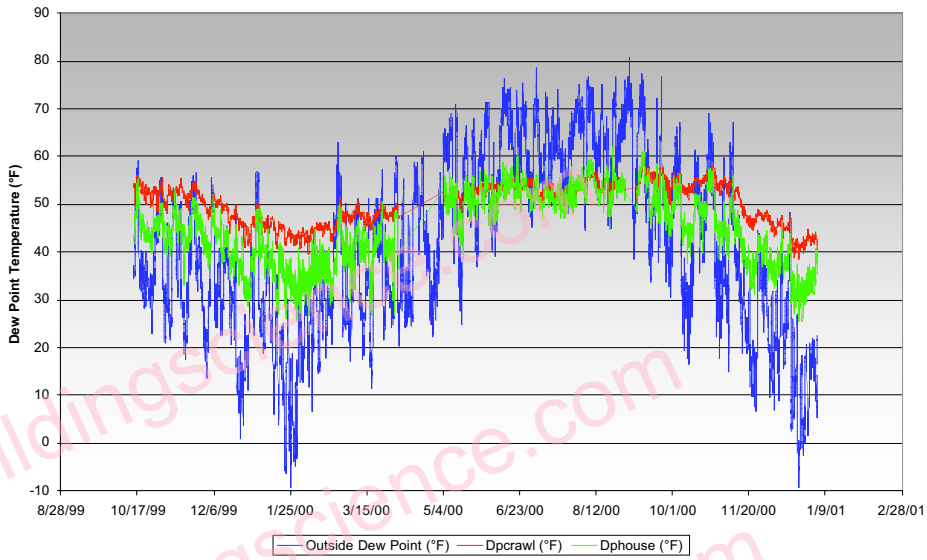

Graph 5: Gates House (Columbus) Indoor, Outdoor, and Crawlspace Dew Point Temperatures

The Gates House (Columbus) plots of indoor relative humidity and crawl space relative humidity are presented in Graph 6. The crawl space relative humidity is consistently higher than the house relative humidity – as would be expected from the previous temperature plots and dew point plots.

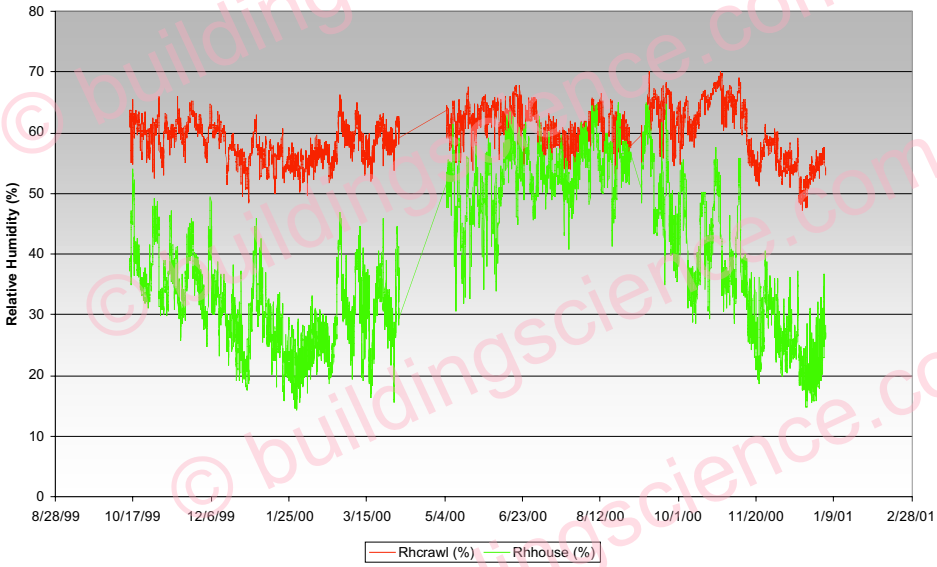

Graph 6: Gates House (Columbus) Indoor and Crawlspace Relative Humidity

The Meeder House (Columbus) plots of indoor, outdoor and crawl space temperature are presented in Graph 7. The crawl space temperature closely tracks the indoor temperature. Like the Cleveland House, the Meeder House has an active supply duct providing conditioned air to the crawl space and transfer grilles providing a return path to the indoor space above the crawl space.

© buildingscience.com

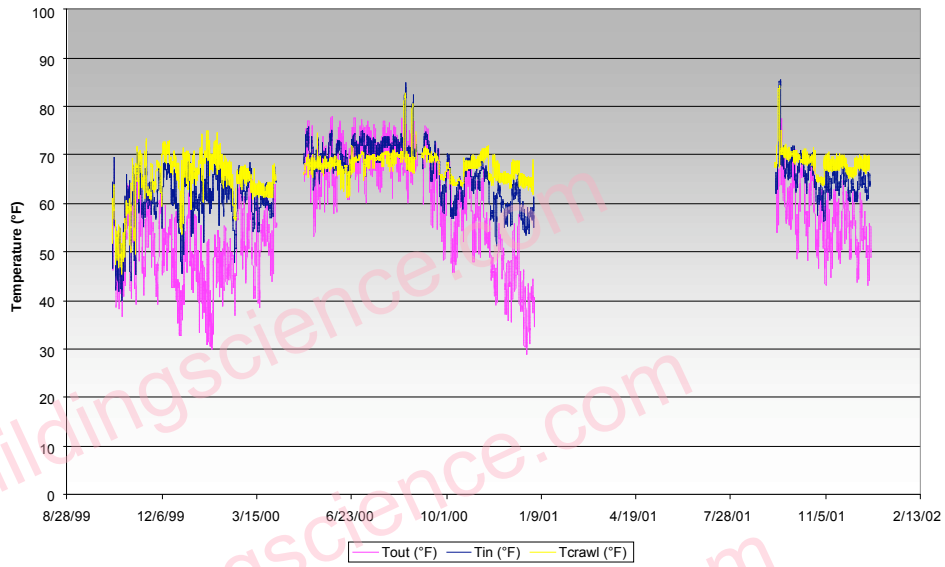

Graph 7: Meeder House (Columbus) Indoor, Outdoor, and Crawlspace Temperatures

The Meeder House (Columbus) plots of indoor, outdoor and crawl space dew point temperature are presented in Graph 8. Again note how closely the crawl space dew point tracks the indoor dew point.

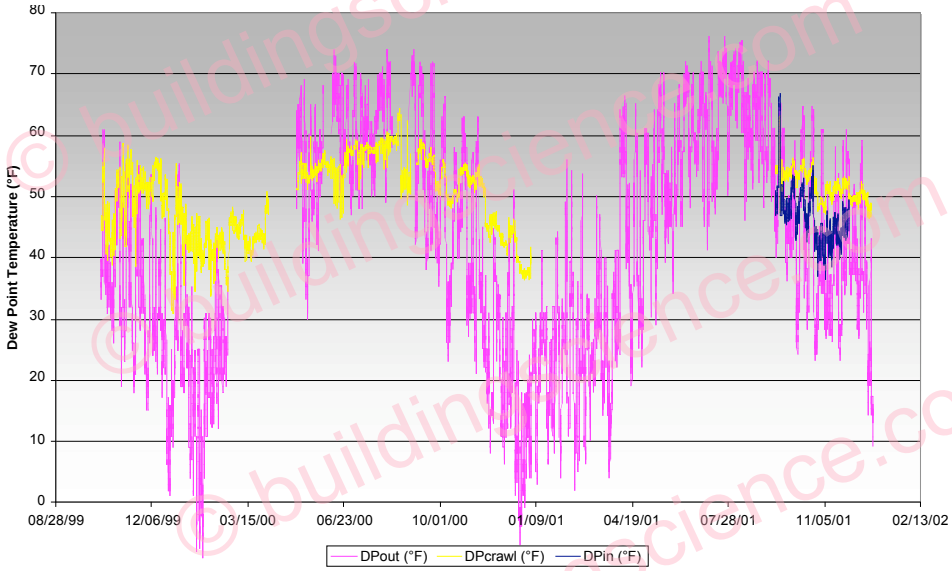

Graph 8: Meeder House (Columbus) Indoor, Outdoor, and Crawlspace Dew Point Temperatures

The Meeder House (Columbus) plots of indoor relative humidity and crawl space relative humidity are presented in Graph 9. The crawl space relative humidity again tracks the indoor relative humidity.

© buildingscience.com

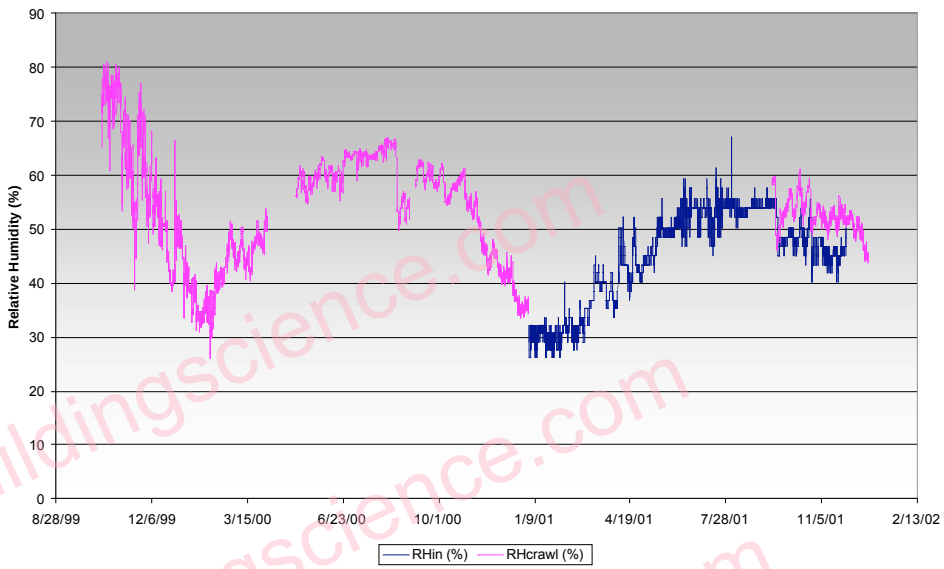

Graph 9: Meeder House (Columbus) Indoor and Crawl Space Relative Humidity

The Albuquerque House plot of crawl space temperature is presented in Graph 10, the Albuquerque House plot of crawl space dew point temperature is presented in Graph 11 and the Albuquerque House plot of crawl space relative humidity is presented in Graph 12. Note how steady, consistent and "flat" the plots are for temperature, dew point and relative humidity. The Albuquerque House crawl space contains an active supply duct providing conditioned air to the crawl space. Transfer grilles provide a return path to the indoor space above the crawl space.

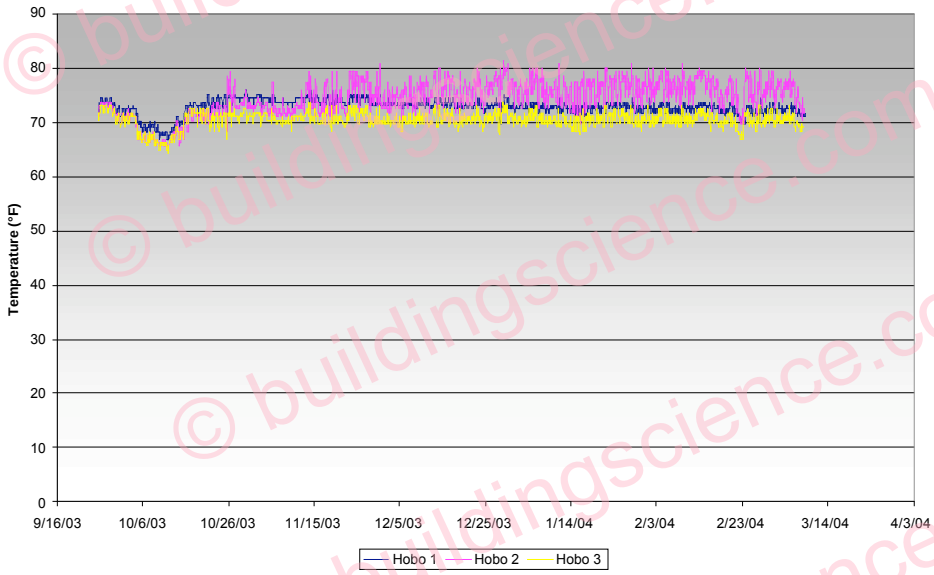

Graph 10: Albuquerque House Crawlspace Temperature

© buildingscience.com

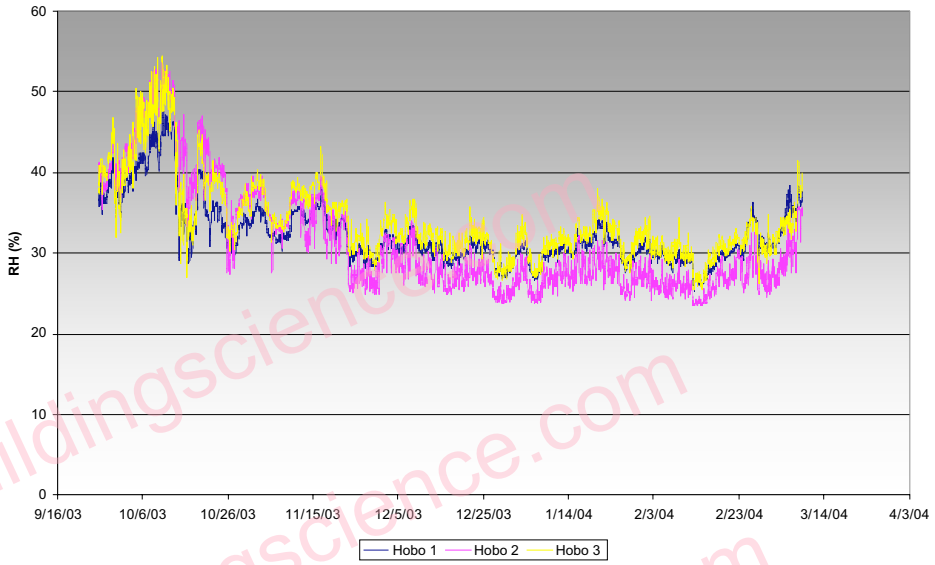

Graph 12: Albuquerque House Crawlspace Relative Humidity

The differences between the crawl spaces that are "actively" conditioned (the Cleveland House, the Meeder House and the Albuquerque House) versus the crawl space that is "passively" conditioned (Gates House) are quite significant. Active conditioning, as can be expected, does a much better job of controlling conditions in the crawl space. As will be noted later, in the Code discussion, the model codes require "active conditioning". Based on the monitored data, this appears to be a good idea. As can be expected, there will always be situations where "active" conditioning is unnecessary – such as dry climates and where small crawl spaces are well connected to conditioned basement spaces.

Code Language

The 2003 International Mechanical Code (IMC), the 2003 International Building Code (IBC), the 2004 Supplement to the International Energy Conservation Code (IECC) and the 2004 Supplement to the International Residential Code (IRC) are all very explicit regarding crawl spaces, ventilation, ground covers, insulation and conditioning.

Singularly and in combination the model codes require that unventilated crawl spaces (i.e. those without passive crawl space vents connecting the crawl space to the exterior) be constructed with continuous ground covers, have their perimeter walls insulated and the crawl space to be conditioned:

2003 International Mechanical Code
Chapter 4 Ventilation
Section 406 Ventilation of Uninhabited Spaces

406.1 General. Uninhabited spaces, such as crawl spaces and attics, shall be provided with natural ventilation openings as required by the International Building Code or shall be provided with a mechanical exhaust and supply air system. The mechanical exhaust rate shall be not less than 0.02 cfm per square foot (0.00001 m3/s – m2) or horizontal area and shall be automatically controlled to operate when the relative humidity in the space served exceeds 60 percent.

The 2003 IMC tells you that unvented crawls spaces must be provided with a mechanical exhaust and supply air system and sets the rate and the conditions of operation (i.e. a relative humidity limit is set).

2003 International Building Code
Chapter 12 Interior Environment

1203.3 Under-Floor Ventilation.

1203.3.1 Openings For Under-Floor Ventilation.

1203.3.2. Exceptions. The following are exceptions to Sections 1203.3 and 1203.3.1:

1. *Where warranted by climatic conditions, ventilation openings to the outdoors are not required if ventilation openings to the interior are provided.*

2. *Ventilation openings are not required where continuously operated mechanical ventilation is provided at a rate of 1.0 cubic foot per minute (cfm) for each 50 square feet (1.02 L/s for each 10 m2) of crawl space floor area and the ground surface is covered with an approved vapor retarder.*

3. *Ventilation openings are not required when the ground surface is covered with an approved vapor retarder, the perimeter walls are insulated and the space is conditioned in accordance with the International Energy Conservation Code.*

2004 Supplement to the IECC
IECC, Section 402, Building Thermal Envelope

402.2.8 Crawl Space Walls. As an alternative to insulating floors over crawl spaces, crawl space walls shall be permitted to be insulated when the crawl space is not vented to the outside. Crawl space wall insulation shall be permanently fastened to the wall and extend downward from the floor to the finished grade level and then vertically and/or horizontally for at least an additional 24 inches (610 mm). Exposed earth in unvented crawl space foundations shall be covered with a continuous vapor retarder. All joints of the vapor retarder shall overlap by 6 inches (153 mm) and be sealed or taped. The edges of the vapor retarder shall extend at least 6 inches (153 mm) up the stem wall and shall be attached to the stem wall.

2004 Supplement To The IRC
IRC, Section R408.3, Unvented Crawl Space

R408.3 Unvented Crawl Space. Ventilation openings in under-floor spaces specified in Sections R408.1 and R408.2 shall not be required where:

1. *Exposed earth is covered with a continuous vapor retarder. All joints of the vapor retarder shall overlap by 6 inches (153 mm) and be sealed or taped. The edges of the vapor retarder shall extend at least 6 inches (153 mm) up the stem wall and shall be attached to the stem wall,*

2. *And one of the following is provided for the under-floor space:*

    a. *Continuously operated mechanical exhaust ventilation at a rate equal to 1 cfm (0.47 L/s) for each 50 ft2 (4.7 m2) of crawl space floor area, including an air pathway to the common area (such as a duct or transfer grille), and perimeter walls insulated in accordance with Section N1102.2.8, or*

    b. *Conditioned air supply sized to deliver at a rate equal to 1 cfm (0.47 L/s) for each 50 ft2 (4.7 m2) of under-floor area, including a return air pathway to the common area (such as a duct or transfer grille), and perimeter walls insulated in accordance with Section N1102.2.8, or*

    c. *Plenum complying with Section M1601.4, if under-floor space is used as a plenum.*

The 2003 IBC tells you that ventilation openings are not always required based on the climate if ventilation openings to the interior are provided. It goes on to say that ventilation openings are also not required if mechanical ventilation is provided and it tells you how much to provide. Finally, the 2003 IBC says that ventilation openings are not required if a ground cover is provided and the crawl space perimeter is insulated and the crawl space is conditioned in accordance with the IECC.

The 2004 Supplement to the IECC tells you that you do not have to insulate the floor of a crawl space if you insulate the perimeter of the crawl space, it tells you how much insulation to install and it tells you that a ground cover is required. The 2004 Supplement to the IECC also provides the following definition for a conditioned space:

Conditioned Space. An area or room within a building being heated or cooled, containing uninsulated ducts, or with a fixed opening directly into an adjacent conditioned space.

The 2004 Supplement to the IRC tells you that ventilation openings are not necessary if you have a ground cover and if you provide some form of conditioning. It explicitly allows three approaches to conditioning. The first uses the concept of transfer air where air from the living space (which is a conditioned space) is pulled into the crawl space via a duct or transfer grille due to the exhaust action of a fan that pulls air out of the crawl space and exhausts it to the exterior. The size of the fan is also specified. The second uses the concept of supply air and a return air pathway – an approach similar to that of providing conditioning to a bedroom or a basement. The quantity of conditioning air is also specified. The third uses the concept of the crawl space as a supply plenum. In this plenum approach to conditioning additional specific requirements are required and are referenced in Section M1601.4:

2003 International Residential Code
Chapter 16 Duct Systems

M1601.4 Under Floor Plenums. An under-floor space used as a supply plenum shall conform to the requirements of this section. Fuel gas lines and plumbing waste cleanouts shall not be located within the space.

M1601.4.1 General. The space shall be cleaned of loose combustible materials and scrap, and shall be tightly enclosed. The ground surface of the space shall be covered with a moisture barrier having a minimum thickness of 4 mils (0.102 mm).

M1601.4.2 Materials. The under-floor space, including the sidewall insulation, shall be formed by materials having flame-spread ratings not greater than 200 when tested in accordance with ASTM E 84.

M1601.4.3 Furnace Connections. A duct shall extend from the furnace supply outlet to not less than 6 inches (152 mm) below the combustible framing. This duct shall comply with the provisions of Section M1601.1. A noncombustible receptacle shall be installed below any floor opening into the plenum in accordance with the following requirements:

1. *The receptacle shall be securely suspended from the floor members and shall not be more than 18 inches (457 mm) below the floor opening.*
2. *The area of the receptacle shall extend 3 inches (76 mm) beyond the opening on all sides.*
3. *The perimeter of the receptacle shall have a vertical lip of at least 1 inch (25.4 mm) high at the open sides.*

M1601.4.4 Access. Access to an under-floor plenum shall be provided through an opening in the floor with minimum dimensions of 18 inches by 24 inches (457 mm by 610 mm).

M1601.4.5 Furnace Controls. The furnace shall be equipped with an automatic control that will start the air-circulating fan when the air in the furnace bonnet reaches a temperature not greater than 150 degrees F (66 degrees C). The furnace shall additionally be equipped with an approved automatic control that limits the outlet air temperature to 200 degrees F (93 degrees C).

This section is also quite specific. It only applies when the crawl space is used as a plenum. In other words when using R408.3, 2, (c) not when using R408.3.2, (a) or R408.3.2 (b). Many builders and many building code officials erroneously interpret the code to require that the provisions of Section M1601.4 apply to all conditioned crawl spaces and not just to crawl spaces that are used as supply plenums.

A plenum is defined in the 2003 IRC as:

Plenum. A chamber that forms part of an air-circulation system other than the occupied space being conditioned.

A conditioned crawl space is by definition the space that is being conditioned when air is supplied to it via a supply duct or via a transfer grille or opening. It is therefore not a plenum. A crawl space is only a plenum when the crawl space is supplying air to the space above (or adjacent to it) for the purpose of conditioning the space above (or adjacent to it).

The issue is some what muddied when it is argued that the requirements do not apply to crawl spaces if it is interpreted that a crawl space is not an "occupied space". If the crawl space is considered a utility space or storage

space or simply a conditioned space and these types of spaces are also considered "occupied space" then the issue is moot. The 2003 IRC is not helpful as it defines occupied space as follows:

Occupied Space. The total area of all buildings or structures on any lot or parcel of ground projected on a horizontal plane, excluding permitted projections as allowed by this code.

This definition was clearly not intended to apply to this particular issue although if this language is strictly and literally interpreted the matter once again becomes moot as under this definition a crawl space is "occupied space" regardless of whether it is vented or not, conditioned or not.

The 2003 International Mechanical Code (IMC) defines a plenum as follows:

Plenum. An enclosed portion of the building structure, other than an occupiable space being conditioned, that is designed to allow air movement, an thereby serve as part of an air distribution system.

This is somewhat different than the definition in the 2003 IRC. The term occupiable space is used rather than occupied space. The 2003 IMC does not define occupiable space. For the definition of occupiable space we have to go to the 2003 IBC:

Occupiable Space. A room or an enclosed space designed for human occupancy in which individuals congregate for amusement, educational or similar purposes or in which occupants are engaged at labor, and which is equipped with a means of egress and light and ventilation facilities meeting the requirements of this code.

Under this definition, a conditioned crawl space clearly does not meet the definition of occupiable space. Also, equally clearly, the issue of conditioned crawl spaces was not considered when this particular definition was established. Although you could argue that sometimes people go into crawl spaces for amusement or education purposes – and we do typically provide light in a conditioned crawl space (a light bulb and switch) and ventilation via provisions for supplying and returning or exhausting air and therefore a conditioned crawl space is an occupiable space. Of course, this type or augment is ridiculous in the extreme and is as weak as to the augment used by some individuals to include conditioned crawl spaces in the definition of plenums since the existing plenum definitions contain references to occupied space or occupiable space.

The 2004 Supplement to the IRC clearly intended to treat conditioned crawl spaces differently than crawl spaces that are designed to be used as plenums since a separate requirement/provision was provided for crawl spaces used as plenums in the code language. The definitions section of the code needs to be cleared up to make this explicitly clear. Until this happens there will continue to be individuals using the occupiable space definition as a club to require the provisions of Section M1601.4 to apply to all conditioned crawl spaces.

An extremely simple way to clear up the confusion is to alter the definition of a plenum by deleting the word "occupied" from the existing definition in the 2003 IRC. The new definition would read as follows:

Plenum. A chamber that forms part of an air-circulation system other than the space being conditioned.

In the 2003 IMC the definition of plenum should also be altered by deleting the words "an occupiable" and replacing them with the word "the" so that the new definition would read as follows:

Plenum. An enclosed portion of the building structure, other than the space being conditioned, that is designed to allow air movement, an thereby serve as part of an air distribution system.

Alternatively, a definition of "occupiable space" could be provided for the 2003 IRC and the word "occupied" in the definition of "plenum" be changed to "occupiable". The definintion of "occupiable space" for the 2003 IRC could read as follows:

Occupiable Space: Any room or enclosed space intended for human activities, including but not limited to, all bedrooms, kitchens, dining rooms, bathrooms, toilets, closets, halls, storage and utility areas, laundry areas and conditioned crawl spaces and conditioned attic spaces.

The bottom line is that crawl space ventilation is not required by the model codes if:

- a ground cover is provided
- the perimeter walls are insulated
- the crawl space is conditioned

Based on the field testing and experience, these are good requirements. However, the issue of plenum definition still needs to be clarified so that the explicit language of the model codes meets the obvious intent of the model codes regarding conditioned crawl spaces.

About this Report

This report was prepared for the US Department of Energy's Building America Program (see Building America cover page for more information). The report is freely available to the public at www.buildingamerica.gov.

About the Author

Joseph Lstiburek, Ph.D., P.Eng., is a principal of Building Science Corporation in Westford, Massachusetts. He has twenty-five years of experience in design, construction, investigation, and building science research. Joe is an ASHRAE Fellow and an internationally recognized authority on indoor air quality, moisture, and condensation in buildings. More information about Joseph Lstiburek can be found at www.buildingsciencecorp.com

Direct all correspondence to: Joseph Lstiburek, Building Science Corporation, 70 Main Street, Westford, MA 01886

Limits of Liability and Disclaimer of Warranty:

Building Science documents are intended for professionals. The author and the publisher of this article have used their best efforts to provide accurate and authoritative information in regard to the subject matter covered. The author and publisher make no warranty of any kind, expressed or implied, with regard to the information contained in this article.

The information presented in this article must be used with care by professionals who understand the implications of what they are doing. If professional advice or other expert assistance is required, the services of a competent professional shall be sought. The author and publisher shall not be liable in the event of incidental or consequential damages in connection with, or arising from, the use of the information contained within this Building Science document.

R406.4 Precast concrete foundation system dampproofing. Except where required by Section R406.2 to be waterproofed, precast concrete foundation walls enclosing habitable or useable spaces located below *grade* shall be dampproofed in accordance with Section R406.1.

R406.4.1 Panel joints sealed. Precast concrete foundation panel joints shall be sealed full height with a sealant meeting ASTM C 920, Type S or M, *Grade* NS, Class 25, Use NT, M or A. Joint sealant shall be installed in accordance with the manufacturer's installation instructions.

SECTION R407
COLUMNS

R407.1 Wood column protection. Wood columns shall be protected against decay as set forth in Section R317.

R407.2 Steel column protection. All surfaces (inside and outside) of steel columns shall be given a shop coat of rust-inhibitive paint, except for corrosion-resistant steel and steel treated with coatings to provide corrosion resistance.

R407.3 Structural requirements. The columns shall be restrained to prevent lateral displacement at the bottom end. Wood columns shall not be less in nominal size than 4 inches by 4 inches (102 mm by 102 mm). Steel columns shall not be less than 3-inch-diameter (76 mm) Schedule 40 pipe manufactured in accordance with ASTM A 53 Grade B or *approved* equivalent.

Exception: In Seismic Design Categories A, B and C, columns no more than 48 inches (1219 mm) in height on a pier or footing are exempt from the bottom end lateral displacement requirement within under-floor areas enclosed by a continuous foundation.

SECTION R408
UNDER-FLOOR SPACE

R408.1 Ventilation. The under-floor space between the bottom of the floor joists and the earth under any building (except space occupied by a *basement*) shall have ventilation openings through foundation walls or exterior walls. The minimum net area of ventilation openings shall not be less than 1 square foot (0.0929 m^2) for each 150 square feet (14 m^2) of under-floor space area, unless the ground surface is covered by a Class 1 vapor retarder material. When a Class 1 vapor retarder material is used, the minimum net area of ventilation openings shall not be less than 1 square foot (0.0929 m^2) for each 1,500 square feet (140 m^2) of under-floor space area. One such ventilating opening shall be within 3 feet (914 mm) of each corner of the building.

R408.2 Openings for under-floor ventilation. The minimum net area of ventilation openings shall not be less than 1 square foot (0.0929 m^2) for each 150 square feet (14 m^2) of under-floor area. One ventilation opening shall be within 3 feet (915 mm) of each corner of the building. Ventilation openings shall be covered for their height and width with any of the following materials provided that the least dimension of the covering shall not exceed $^1/_4$ inch (6.4 mm):

1. Perforated sheet metal plates not less than 0.070 inch (1.8 mm) thick.
2. Expanded sheet metal plates not less than 0.047 inch (1.2 mm) thick.
3. Cast-iron grill or grating.
4. Extruded load-bearing brick vents.
5. Hardware cloth of 0.035 inch (0.89 mm) wire or heavier.
6. Corrosion-resistant wire mesh, with the least dimension being $^1/_8$ inch (3.2 mm) thick.

Exception: The total area of ventilation openings shall be permitted to be reduced to $^1/_{1,500}$ of the under-floor area where the ground surface is covered with an *approved* Class I vapor retarder material and the required openings are placed to provide cross ventilation of the space. The installation of operable louvers shall not be prohibited.

R408.3 Unvented crawl space. Ventilation openings in under-floor spaces specified in Sections R408.1 and R408.2 shall not be required where:

1. Exposed earth is covered with a continuous Class I vapor retarder. Joints of the vapor retarder shall overlap by 6 inches (152 mm) and shall be sealed or taped. The edges of the vapor retarder shall extend at least 6 inches (152 mm) up the stem wall and shall be attached and sealed to the stem wall or insulation; and
2. One of the following is provided for the under-floor space:
   - 2.1. Continuously operated mechanical exhaust ventilation at a rate equal to 1 cubic foot per minute (0.47 L/s) for each 50 square feet (4.7m^2) of crawlspace floor area, including an air pathway to the common area (such as a duct or transfer grille), and perimeter walls insulated in accordance with Section N1103.2.1 of this code;
   - 2.2. *Conditioned air* supply sized to deliver at a rate equal to 1 cubic foot per minute (0.47 L/s) for each 50 square feet (4.7 m^2) of under-floor area, including a return air pathway to the common area (such as a duct or transfer grille), and perimeter walls insulated in accordance with Section N1102.2 of this code;
   - 2.3. Plenum in existing structures complying with Section M1601.5, if under-floor space is used as a plenum.

R408.4 Access. Access shall be provided to all under-floor spaces. Access openings through the floor shall be a minimum of 18 inches by 24 inches (457 mm by 610 mm). Openings through a perimeter wall shall be not less than 16 inches by 24 inches (407 mm by 610 mm). When any portion of the

through-wall access is below *grade*, an areaway not less than 16 inches by 24 inches (407 mm by 610 mm) shall be provided. The bottom of the areaway shall be below the threshold of the access opening. Through wall access openings shall not be located under a door to the residence. See Section M1305.1.4 for access requirements where mechanical *equipment* is located under floors.

R408.5 Removal of debris. The under-floor *grade* shall be cleaned of all vegetation and organic material. All wood forms used for placing concrete shall be removed before a building is occupied or used for any purpose. All construction materials shall be removed before a building is occupied or used for any purpose.

R408.6 Finished grade. The finished *grade* of under-floor surface may be located at the bottom of the footings; however, where there is evidence that the groundwater table can rise to within 6 inches (152 mm) of the finished floor at the building perimeter or where there is evidence that the surface water does not readily drain from the building site, the *grade* in the under-floor space shall be as high as the outside finished *grade*, unless an *approved* drainage system is provided.

R408.7 Flood resistance. For buildings located in flood hazard areas as established in Table R301.2(1):

1. Walls enclosing the under-floor space shall be provided with flood openings in accordance with Section R322.2.2.
2. The finished ground level of the under-floor space shall be equal to or higher than the outside finished ground level on at least one side.

   Exception: Under-floor spaces that meet the requirements of FEMA/FIA TB 11-1.

Proposed Draft Rules Based on the July 2014 Dwelling Code Council Report

SECTION 1. SPS 320.02 (1) (d) to (h) are renumbered SPS 320.02 (1) (g) to (k).

SECTION 2. SPS 320.02 (1) (d) to (f) and (Notes) are created to read:

SPS 320.02 (1) (d) A one- or 2-family dwelling built on or after the effective dates under s. SPS 320.03, that is used as a foster home or group home, or as a residential care center for children and youth which has a capacity for 8 or fewer children, all as defined in s. 48.02, Stats. Where such a home or center is operated in each dwelling unit of a 2-family dwelling, the capacity limit for each unit is independent of the other unit only if the two operations are independent of each other.

Note: The definitions in section 48.02 of the Statutes limit foster homes to no more than 4 children unless the children are siblings, and limit group homes to no more than 8 children. Where permitted by the Department of Children and Families, a group home or a residential care center for children and youth that has a capacity for 8 or fewer children may be located in a one- or 2-family dwelling as a community living arrangement, as defined in section 46.03 (22) of the Statutes.

(e) A one- or 2-family dwelling built on or after the effective dates under s. SPS 320.03, in which a public or private day care center for 8 or fewer children is located. Where such a day care center is operated in each dwelling unit of a 2-family dwelling, the capacity limit for each unit is independent of the other unit only if the two operations are independent of each other.

Note: Chapter DCF 250, as administered by the Department of Children and Families, defines a "family child care center" as being "a facility where a person provides care and supervision for less than 24 hours a day for at least 4 and not more than 8 children who are not related to the provider." Chapter DCF 250 applies various licensing and other requirements to these centers, including for fire protection and other aspects of the physical plant.

(f) 1. Any portion of or space within a one- or 2-family dwelling built on or after the effective dates under s. SPS 320.03, in which a home occupation is located.

2. In this paragraph, "home occupation" means any business, profession, trade or employment conducted in a person's dwelling unit, that may involve the person's immediate family or household and a maximum of one other unrelated person, but does not involve any of the following:

a. Explosives, fireworks or repair of motor vehicles.

b. More than 25% of the habitable floor area of the dwelling unit.

Note: See chapters SPS 361 to 366 for buildings that are beyond the scope of this code.

(From: Report recommendation SPS 320/1 – and motion 6 on 5.12.14)

SECTION 3. SPS 320.02 (5) is renumbered SPS 321.02 (4) and amended to read:

SPS 321.02 (4) ~~INNOVATIVE DWELLINGS~~ ALTERNATE MATERIALS AND STANDARDS. No part of this code is intended to prohibit or discourage use of alternate, equivalent materials or standards; or the construction of innovative dwellings such as a dwelling built below ground, a geodesic dome, a concrete house, a ~~fiber-glass~~ fiberglass house or any other nonconventional structure.

(From: Report recommendation 321/2)

SECTION 4. SPS 320.02 (6) is renumbered SPS 320.02 (5).

(From: Report recommendation 321/2)

SECTION 5. SPS 320.07 (34f) is amended to read:

SPS 320.07 (34f) "Flight" means a continuous series of ~~steps~~ risers and treads, with no intermediate landings.

SECTION 6. SPS 320.07 (34m) is repealed.

(From: Editorial clarification, moved to SPS 321.05 (1) and (2))

SECTION 7. SPS 320.07 (36r) and (37m) are created to read:

SPS 320.07 (36r) "Guard" means a barrier erected to prevent a person from falling to a lower level.

(37m) "Handrail" means a horizontal or sloping rail intended for grasping by a hand, for guidance or support or preventing a fall down a stair.

SECTION 8. SPS 320.07 (47), (50), (62) (intro.), and (66) are amended to read:

SPS 320.07 (47) "Landing" means the level portion of a stairs located between flights of stairs or located at the top and ~~foot~~ base of a stairs.

(50) "Loft" means an upper room or floor which has at least 50% of the common wall open to the floor below. The opening may be infringed upon by an open ~~guardrail~~ guard constructed in compliance with s. SPS 321.04 (2), but not by a window or half-wall ~~guardrail~~ guard. All habitable rooms of lofts are open to the floor below.

(62) "Shingle" means a unit of ~~roof covering~~ roof-covering material that has been manufactured to specific dimensions and is applied in overlapping fashion. "Shingle" includes all of the following:

(66) ~~A "stairway" is~~ "Stair," "stairs" or "stairway" means one or more ~~flights of steps,~~ risers and the necessary treads, ~~platforms and landings connecting them, to~~ which form a continuous passage from one elevation to another. Multiple stairways can be connected by platforms and landings.

SECTION 9. SPS 320.07 (67) and (67m) are repealed.

(From: Report recommendations 320/2 to 4, motions 8 and 9 on 5.12.14, motions 2 and 4 on 2.13.15, editorial correction, and repeals storm water provisions that have transferred to the Department of Natural Resources)

SECTION 10. SPS 320.085 is repealed.

(Repeals storm water provisions that have transferred to the Department of Natural Resources)

SECTION 11. SPS 320.09 (5) (b) 2. d. is amended to read:

SPS 320.09 (5) (b) 2. d. The location and construction details of wall bracing on each building side and floor level. The details may consist of the Wall Bracing Compliance Worksheet or a legend showing which wall-bracing method is used and the lengths or number of braced wall panels – and demarcation of the circumscribed rectangles if more than one is used.

(From: Report recommendation 320/5 and motion 5 on 2.13.15)

SECTION 12. SPS 320.09 (5) (d) is repealed.

SECTION 13. SPS 320.09 (6) (d) is amended to read:

SPS 320.09 (6) (d) The name of the initial downstream receiving water of the state from the dwelling shall be identified, regarding erosion and sediment control ~~and storm water management~~.

(Deletes storm water provisions that have transferred to the Department of Natural Resources)

SECTION 14. SPS 320.24 (2) (Note) is amended to read:

SPS 320.24 (2) Note: Copies of the adopted standards are on file in the offices of the department and the legislative reference bureau. Copies of the standards may be purchased, or are available for free, through the respective organizations or other information listed in Tables 320.24-1 to 320.14-13.

SECTION 15. SPS 320.24 (2) Heading, Table 320.24–1 to Heading, Table 320.24-13 are amended to read:

SPS 320.24 (2) Table 320.24–1
(Partial Table)

ACI	American Concrete Institute P.O. Box 9094 Farmington Hills, MI 48333 www.concrete.org

Table 320.24-2
(Partial Table)

AF&PA	American Forest & Paper Association 1111 19th Street, N.W., Suite 800 Washington, D.C. 20036 www.afandpa.org

Table 320.24-3
(Partial Table)

AISC	American Institute of Steel Construction One ~~E.~~ East Wacker Drive, Suite ~~3100~~ 700 Chicago, IL 60601 www.aisc.org

Table 320.24-4
(Partial Table)

ASTM	~~American Society for Testing and Materials~~ ASTM International ~~1916 Race Street~~ ~~Philadelphia,~~ 100 Barr Harbor Drive PO Box C700 West Conshohocken, PA ~~19103~~ 19428-2959 www.astm.org

Table 320.24-5
(Partial Table)

ASCE	American Society of Civil Engineers 1801 Alexander Bell Drive Reston, VA 20191 www.asce.org

Table 320.24-6
(Partial Table)

ASHRAE	American Society of Heating, Refrigerating, and Air-conditioning Engineers, Inc.

	1791 Tullie Circle, N.E. Atlanta, GA 30329 www.ashrae.org

Table 320.24-7
(Partial Table)

ICC	The International Code Council 500 New Jersey Avenue, NW, 6th Floor Washington, D.C. 20001 www.iccsafe.org

Table 320.24-8
(Partial Table)

ILBA	International Log Builders' Association PO Box 775 Lumby, BC Canada VOE 2G0 www.logassociation.org

Table 320.24-9
(Partial Table)

NAIMA	North American Insulation Manufacturers Association ~~44~~ 11 Canal Canter Plaza, Suite ~~310~~ 103 Alexandria, VA 22314 www.naima.org

Table 320.24-10
(Partial Table)

NFPA	National Fire Protection Association 1 Batterymarch Park Quincy, MA 02269 www.nfpa.org

Table 320.24-11
(Partial Table)

NIST	National Institute of Standards and Technology U.S. Department of Commerce Washington, D.C. 20234 http://catalog.hathitrust.org/Record/009487395

Table 320.24-12
(Partial Table)

SMACNA	Sheet Metal and Air Conditioning ~~Contractors~~ Contractors' National Association 4201 Lafayette Center Drive Chantilly, VA ~~20151-1209~~ 20151-1219 www.smacna.org

Table 320.24-13
(Partial Table)

TPI	Truss Plate Institute, Inc. 218 North Lee Street, Suite 312 Alexandria, VA 22314 www.tpinst.org

(From: Report recommendation 320/6 – updating the standards tables in chapter SPS 320 and motion 6 on 2.13.15)

SECTION 16. SPS 321.02 (1) (d), (title), and (Note) are renumbered SPS 321.02 (3) (h) (title), 1., and (Note), and SPS 321.02 (3) (h) 1. and (Note), as renumbered, are amended to read:

SPS 321.02 (3) (h) 1. All building components shall be fastened to withstand the dead load, live load, snow load, and wind load.

Note: Other fastening methods may be allowed if engineered under s. SPS 321.02 (3).

SECTION 17. SPS 321.02 (3) (h) 2. is created to read:

SPS 321.02 (3) (h) 2. Fasteners shall comply with the schedule listed in Table 321.02-2.

SECTION 18. SPS 320 to 325 Appendix, Minimum Fastener Schedule Table is renumbered SPS 321.02 (3) (h) Table 321.02-2 and amended to read:

SPS 321.02 (2) (h) Table 321.02-2
MINIMUM FASTENER SCHEDULE TABLE
(Partial Table)

Other interior and exterior panel products and finishes installed per manufacturer requirements.
For engineered connectors, use manufacturer's specified fasteners.

Description of Building Materials/Connection	Number and Type of Fastener[1 2 3]
Floor Framing	
Joist to joist, face nailed over support	~~2−12d~~ 3−8d
Joist to sill or girder, toe nail	~~2−16d,~~ 3−8d
Wall Framing	
Stud to sole plate, toe nail	~~4−8d~~ 3−8d or ~~3−16d~~ 2–16d
Doubled studs, face nail	~~16d~~ 10d at 24" o.c.
Doubled top plates, face nail	~~16d~~ 10d at ~~16"~~ 24" o.c.
Doubled top plates, minimum 24-inch offset of end joints, face nail in lapped area	8–16d
Top plates, laps and intersections, face nail	~~2−16d~~ 2–10d
Built-up corner studs	~~16d at 30" o.c., 16d~~ 10d at 24" o.c.
Roof/Ceiling Framing	
Ceiling joists to plate, toe nail	~~2−16d,~~ 3−8d
Ceiling joist, laps over partitions, face nail	~~3−16d~~ 3–10d
Rafter to plate, toe nail (maximum 6 rafter span, engineered connector	2−16d~~, 3−8d~~

for longer)

(From: Report recommendation 321/1 and editorial correction)

SECTION 19. SPS 321.02 (4) (Note) is created to read:

SPS 321.02 (4) Note: Examples of materials addressed by this subsection include structural insulated panels that are used in accordance with the manufacturer's instructions or structural analysis, and cold-formed steel framing complying with AISI S230 *Standard for Cold-Formed Steel Framing – Prescriptive Method for One and Two Family Dwellings*.

(From: Report recommendation 321/2)

SECTION 20. SPS 321.03 (1) (b) (Note) is created to read:

SPS 321.03 (1) (b) **Note:** Under this paragraph, only one of the two exit doors that are addressed in par. (a) is required to exit directly to grade.

SECTION 21. SPS 321.03 (1) (c) and (d) are amended to read:

SPS 321.03 (1) (c) ~~An additional~~ Any exit that does not comply with par. (b) may discharge to an outside balcony that complies with sub. (8).

(d) ~~An additional~~ Any exit that does not comply with par. (b) may discharge into an attached garage provided the garage has an exit door that discharges to grade. An overhead garage door may not be used as an exit door.

(From: Editorial clarification)

SECTION 22. SPS 321.03 (1) (h) 3. is created to read:

SPS 321.03 (1) (h) 3. One of the exit doors required in par. (a) may be omitted for a dwelling unit that has one or more egress windows on the first floor. If there are bedrooms, each must have a window which complies with sub. (6).

(From: Report recommendation 321/4 and motion 11 on 2.13.15)

SECTION 23. SPS 321.03 (2) (a) to (c) and (6) (d) 5. and (e) 4. and 5. a. are amended to read:

SPS 321.03 (2) (a) At least 2 exits shall be provided from the second floor. ~~One~~ At least one of the exits shall be a stairway or ramp and lead to the first floor or discharge to grade. The second exit may be via a stairway or ramp ~~which~~ that discharges to grade, or ~~may discharge~~ to a

balcony which complies with sub. (8), or to a deck which complies with s. SPS 321.225 and which is no more than 15 feet above the grade below.

(b) ~~Except as provided in par. (c), windows~~ Windows which comply with sub. (6) may be provided in each second floor bedroom – or in another location on the second floor if there are no bedrooms on that floor – in lieu of the second exit from ~~the~~ that floor.

(c) Where the second floor of a building is the lowest floor level in a dwelling unit, as in an up-and-down duplex, ~~windows may not be provided as the second exit from the floor~~ no exit from the unit may go through another dwelling unit or other party's occupancy on the first floor.

(6) (d) 5. A ~~Step~~ stair used for the sole purpose of reaching the top of the platform or fixture is exempt from the requirements of s. SPS 321.04.

(e) 4. If the bottom of the areaway is more than 46 inches below adjacent grade or the top of the areaway enclosure, the areaway shall be provided with a ladder or ~~at least one additional step~~ stair to aid egress. ~~Steps~~ Stairs used to comply with this section are exempt from the requirements of s. SPS 321.04.

5. a. Ladders or other ~~steps~~ stairs used to comply with subd. 4. may infringe on the required area of the areaway by a maximum of 6 inches.

(From: Report recommendations 321/5 to 7 and 320/3 and 4 – and motions 8 and 9 on 5.12.14)

SECTION 24. SPS 321.03 (6) (f) and (Note) are created to read:

SPS 321.03 (6) (f) An egress window under a deck or porch shall discharge through a clear path of at least 36 inches in height and 36 inches in width, and no more than 15 feet in length, to a yard or open space.

Note: Under this paragraph, there is no maximum height above grade, for an egress window. Similarly, egress windows are not prohibited from discharging to a roof, regardless of the slope of the roof.

(From: Report recommendation 321/8 – and motion 16 on 5.12.14)

SECTION 25. SPS 321.03 (7) (a) 4. and (8) (b), and (c) 1. and 3. are amended to read:

SPS 321.03 (7) (a) 4. Where sliding doors are used as a required exit, the clear opening shall be at least ~~30~~ 29 inches wide and be at least 76 inches high.

(8) (b) Balconies shall be provided with ~~guardrails~~ guards in accordance with s. SPS 321.04 (3).

(c) 1. The balcony ~~guardrail~~ guard shall terminate no more than 46 inches above the floor level of the balcony.

3. The floor of the balcony shall have minimum dimensions of 3 feet by 3 feet. The ~~guardrail~~ guard and its supports may infringe on the dimensions of the required area.

(From: Report recommendation 321/9 – and motion 2 on 2.13.15)

SECTION 26. SPS 321.03 (11) is created to read:

SPS 321.03 (11) EXITS TO COURTYARDS. No exit may discharge to a courtyard having a perimeter that is entirely enclosed by exterior building walls or other obstructions that prevent pedestrian passage.

(From: Report recommendation 321/3)

SECTION 27. SPS 321.04 (1) (a) 2., (2) (a) 1. and (c) 4. a. and b., and (3) (Title) to (a) 5. are amended to read:

SPS 321.04 (1) (a) 2. Tub access ~~steps~~ stairs, unless they are an integral part of an approved plumbing product.

(From: Report recommendations 320/3 and 4 – and motions 8 and 9 on 5.12.14)

(2) (a) 1. Except for spiral staircases under subd. 2., stairways shall measure at least 36 inches in width. Handrails and associated trim may project a maximum of 4.5 inches into the required width at each side of the stairway. The minimum clear width at and below the handrail, including at treads and landings, may not be less than 31.5 inches where a handrail is installed on one side, and 27 inches where handrails are provided on both sides.

(From: Report recommendation 321/10)

(c) 4. a. An individual winder tread may be placed between rectangular treads or at the end of a flight of rectangular treads provided the tread depth is at least 9 inches, when measured at a ~~point~~ distance of 12 inches from the narrow end~~, is equal to the tread depth of the rectangular steps in the flight~~ of the tread or from the inside face of the wall.

(From: Report recommendation 321/11)

b. There may be more than one individual winder tread in a stairway ~~or in a flight of stairs~~.

(3) HANDRAILS AND ~~GUARDRAILS~~ GUARDS. (a) General. 1. ~~Stair flights~~ A flight of stairs with more than 3 risers shall be provided with at least one handrail for the full length of the ~~stair~~ flight.

2. ~~Handrails or guardrails~~ Guards shall be provided on all open sides of ~~stair flights~~ stairs consisting of more than 3 risers and on all open sides of areas that are elevated more than 24 inches above the floor or exterior grade.

Note: A handrail provided at 30 to 38 inches above the tread nosing meets the height requirement for a ~~guardrail~~ guard on a stairway.

3. a. Except as provided in subd. 3. b., ~~handrails and guardrails~~ guards shall be constructed to prevent the through-passage of a sphere with a diameter of 4 3/8 inches ~~or larger~~, when applying a force of 4 pounds.

b. The triangular area formed by the tread, riser and bottom rail shall have an opening size that prevents the through-passage of a sphere with a diameter of 6 inches ~~or larger~~, when applying a force of 4 pounds.

(From: Report recommendations 320/2 to 4 and 321/12 to 14, motions 8 and 9 on 5.12.14 and motion 2 on 2.13.15)

c. Rope, cable or similar materials used in ~~handrail or guardrail~~ guard infill shall be strung with maximum openings of 3½ inches with vertical supports a maximum of 4 feet apart.

4. a. Handrails and ~~guardrails~~ guards shall be designed and constructed to withstand a 200 pound load applied in any direction.

b. Handrail or ~~guardrail~~ guard infill components, balusters and panel fillers shall withstand a horizontally applied perpendicular load of 50 pounds on any one-foot-square area.

c. Glazing used in handrail or ~~guardrail~~ guard assemblies shall be safety glazing.

5. Exterior handrails and ~~guardrails~~ guards shall be constructed of metal, decay resistant or pressure-treated wood, or shall be protected from the weather.

(From: Report recommendations 320/2 and 321/1 – and motion 2 on 2.13.15)

SECTION 28. SPS 321.04 (3) (b) 1. is renumbered SPS 321.04 (3) (b) 1. a and amended to read:

SPS 321.04 (3) (b) 1. a. Handrails shall be located at least 30 inches, but no more than 38 inches above the nosing of the treads, except as provided in subds. 1. b. to d. Measurement shall be taken from the hard structural surface beneath any finish material to the top of the rail. Variations in uniformity are allowed only when a rail contacts a wall or newel post or where a turnout or volute is provided at the bottom ~~step~~ tread.

SECTION 29. SPS 321.04 (3) (b) 1. b. to d. are created to read:

SPS 321.04 (3) (b) 1. b. A volute, turnout or starting easing that does not comply with subd. 1. a. may extend over the lowest tread.

c. Transition fittings on handrails may extend above the 38-inch height limit

d. Where handrail fittings or bendings are used to provide a continuous transition between flights, or at winder treads, or from a handrail to a ~~guardrail~~ guard, or at the start of a flight, the height at the fittings or bendings may exceed 38 inches.

(From: Report recommendations 320/2 and 3 and 321/15, motions 8 and 9 on 5.12.14 and motion 2 on 2.13.15)

SECTION 30. SPS 321.04 (3) (b) 3. a. and b., and (c) (Title) to 1. a. are amended to read:

SPS 321.04 (3) (b) 3. 'Winders.' a. Except as provided under subd. 3. b., the required handrail on winder ~~steps~~ stairs shall be placed on the side where the treads are wider.

b. Where all winder ~~steps~~ treads in a flight have a ~~tread~~ depth of at least 9 inches from nosing to nosing measured at a point 12 inches from the narrow end of the tread, the required handrail may be located on either side of the stairway.

(c) ~~Guardrails~~ Guards. 1. 'Application' a. All openings between floors, and open sides of landings, platforms, balconies or porches that are more than 24 inches above grade or a floor shall be protected with ~~guardrails~~ guards.

(From: Report recommendations 320/3 and 4, motions 8 and 9 on 5.12.14 and motion 2 on 2.13.15)

SECTION 31. SPS 321.04 (3) (c) 1. d. is created to read:

SPS 321.04 (3) (c) 1. d. This paragraph does not apply to window wells, egress wells, and retaining walls.

(From: Report recommendation 321/16)

SECTION 32. SPS 321.04 (3) (c) 2. and 3. and (4) (a) 2. and (b) are amended to read:

SPS 321.04 (3) (c) 2. 'Height.' ~~Guardrails~~ Guards shall ~~be located~~ extend to at least 36 inches above the floor or to the underside of a stair handrail complying with s. SPS 321.04 (3) (b). Measurement shall be taken from the hard structural surface beneath any finish material to the top of the ~~rail~~ guard.

3. 'Opening size.' ~~Guardrails~~ Guards shall be constructed to prevent the through-passage of a sphere with a diameter of 4 3/8 inches ~~or larger~~, when applying a force of 4 pounds.

(4) (a) 2. Intermediate landings that connect 2 or more straight flights of stairs, or 2 flights of stairs at a right angle, shall be at least as wide as the ~~stairway~~ treads and shall measure at least 36 inches in the direction of travel.

(b) *Landings at the top and base of stairs.* A level landing shall be provided at the top and base of every stairs except as provided in par (d). The landing shall be at least as wide as the ~~stairs~~ treads and shall measure at least 3 feet in the direction of travel.

(From: Report recommendations 320/2 to 4 and 321/13, 14 and 17, motions 8 and 9 on 5.12.14 and motions 2 and 20 on 2.13.15)

SECTION 33. SPS 321.04 (4) (c) 2. is renumbered SPS 321.04 (4) (d) 1. and amended to read:

SPS 321.04 (4) (d) 1. The exterior landing, platform or sidewalk at an exterior doorway shall be located a maximum of 8 inches below the interior floor elevation, be sloped away from the doorway at a minimal rate that ensures drainage, and ~~shall~~ have a length of at least 36 inches in the direction of travel out of the dwelling.

SECTION 34. SPS 321.04 (4) (c) 1. and a. to c. are renumbered SPS 321.04 (4) (c) and 1. To 3., and SPS 321.04 (4) (c) (intro.) and 3., as renumbered, are amended to read:

SPS 321.04 (4) (c) *Doors at landings.* Except as provided in ~~subd.~~ subds. 1. ~~a.~~ to ~~c.~~ 3. and par. (d), level landings shall be provided on each side of any door located at the top or base of a stairs, regardless of the direction of swing. In the following exceptions, ~~stairways to~~ a stairway between a dwelling and an attached ~~garages~~ garage, ~~carports~~ carport or ~~porches are~~ porch is considered to be an interior stair~~s~~:

3. A landing is not required between a sliding glass door or an in-swinging glass door and the top of an exterior stairway of 3 or fewer risers.

SECTION 35. SPS 321.04 (4) (d) (title) and 2. are created to read:

SPS 321.04 (4) (d) (title) *Exterior landings.*

2. The landing at the base of an exterior stair~~s~~ shall be sloped away from the stair~~s~~ at a minimal rate that ensures drainage.

(From: Report recommendation 321/17 and motion 21 on 2.13.15)

SECTION 36. SPS 321.045 (4) (c) is renumbered SPS 321.045 (4) (c) 1. and amended to read:

SPS 321.045 (4) (c) 1. Open-sided ramps shall have the area below the handrail protected by intermediate rails or an ornamental pattern to prevent the passage of a sphere with a diameter of 4 3/8 inches ~~or larger~~ when applying a force of 4 pounds, except as provided in subd. 2.

SECTION 37. SPS 321.045 (4) (c) 2. is created to read:

SPS 321.045 (4) (c) 2. This paragraph does not apply to ramps having a walking surface that is less than 24 inches above adjacent grade, if a toe-kick or side rail is provided to 4 inches above the walking surface, and a mid-rail is provided between there and the handrail.

(From: Report recommendation 321/18)

SECTION 38. SPS 321.05 (1) (intro.) is amended to read:

SPS 321.05 (1) NATURAL LIGHT. ~~All~~ Each habitable ~~rooms~~ room shall be provided with natural light by means of glazed openings. The area of the glazed openings shall be at least 8% of the net floor area, except under the following circumstances:

(From: Editorial clarification)

SECTION 39. SPS 321.05 (1m) ~~(c)~~ is created to read:

SPS 321.05 (1m) NET FLOOR AREA. For the purposes of subs. (1) and (2), "net floor area" does not include any area with a ceiling height of less than 5 feet.

SECTION 40. SPS 321.05 (2) (a) is renumbered SPS 321.05 (2) (a) 1. and amended to read:

SPS 321.05 (2) (a) 1. Natural ventilation shall be provided to ~~all~~ each habitable ~~rooms~~ room by means of openable doors, skylights or windows. The net area of the openable doors, skylights or windows shall be at least 3.5% of the net floor area of the room, except as provided in subd. 2. Balanced mechanical ventilation may be provided in lieu of openable exterior doors, skylights or windows provided the system is capable of providing at least one air change per hour of fresh outside air while the room is occupied. Infiltration may not be considered as make-up air for balancing purposes.

SECTION 41. SPS 321.05 (2) (a) 2. is created to read:

SPS 321.05 (2) (a) 2. Any area with a ceiling height of less than 5 feet may be excluded from the net floor area.

(From: Report recommendation 321/20)

SECTION 42. SPS 321.05 (3) (intro.) to (d) and (e) are renumbered SPS 321.05 (3) (a) and (b), and SPS 321.05 (3) (a) (intro.) and 1. (intro.) and a., and (b), as renumbered, are amended to read:

SPS 321.05 (3) (a) Except as provided in par. ~~(e)~~ (b), glazing shall consist of safety glass meeting the requirements of ~~CPSC~~ either 16 CFR~~,~~ Part 1201 or ANSI Z97.1 when installed in any of the following locations:

1. In any sidelight or glazing adjacent to a door, that meets all of the following:

a. The nearest point of the glazing is within 2 feet of the door when the door is in the closed position.

(b) Safety glass is not required where ~~the size of an individual pane of glass is 8 inches or less in the least dimension~~ glazing meets any of the following:

1. Where the size of an individual pane of glass is 8 inches or less in the least dimension.

2. The safety glass is required by subd. (3) (a) 1. and the only door within 2 feet of the glazing is the fixed panel of a patio door.

3. The safety glass is required by subd. (3) (a) 1. and there is an intervening wall or other permanent barrier between the door and the glazing.

SECTION 43. SPS 321.04 (3) (a) 4. c. is renumbered SPS 321.05 (3) (a) 5. and amended to read:

SPS 321.05 (3) (a) 5. ~~Glazing used in handrail or~~ In ~~guardrail~~ guard assemblies ~~shall be safety glazing~~.

(From: Report recommendation 321/19 and motion 2 on 2.13.15)

SECTION 44. SPS 321.06 is amended to read:

SPS 321.06 Ceiling height. All habitable rooms, kitchens, hallways, bathrooms and corridors shall have a ceiling height of at least 7 feet~~. Habitable rooms~~, except as follows:

(1) (a) Rooms may have ceiling heights of less than 7 feet provided at least 50% of the room's floor area has a ceiling height of at least 7 feet. Any area with a ceiling height of less than 5 feet may be ignored in this calculation.

(b) The 50% limit in par. (a) does not apply to subs. (3) to (6).

(2) Beams and girders or other projections ~~shall not~~ may project to no more than 8 inches below the required ceiling height.

SECTION 45. SPS 321.06 (3) to (6) are created to read:

SPS 321.06 (3) The ceiling height extending back from the front edge of a water closet may slope to below 7 feet, but may not go below 5 feet until beyond the back of the water closet.

(4) The ceiling height extending back from the front edge of a lavatory may be less than 7 feet, but may not go below 5 feet until beyond the back of the lavatory.

(5) A ceiling height of less than 7 feet may be provided between the rear rim of a bathtub and a wall of the room abutting that rim, or between the side rim and a room wall abutting that rim.

(6) A ceiling height of less than 7 feet may be provided between the rear wall of a shower stall and a wall of the room abutting that rear wall, or between the side wall of a shower and a room wall abutting that side wall.

Note: Section SPS 384.20 (5) (o) 4. establishes minimum horizontal clearances for water closets, and reads as follows: "A water closet may not be located closer than 15 inches from its center to any side wall, partition, vanity, or other obstruction, nor closer than 30 inches center to center, between water closets. There shall be at least 24 inches clearance in front of a water closet to any wall, fixture or door."

Note: See ch. SPS 384 Appendix for further explanatory material.

(From: Report recommendations 321/20 and 21 – and motion 10 on 5.12.14)

SECTION 46. SPS 321.08 Table 321.08 is amended to read:

SPS 321.08 Table 321.08
(Partial Table)

Between Dwelling And:	**Distance Between Objects[1]**	**Fire Rated Construction[2,5]**
Detached garage, accessory building, or other dwelling on same property	5 to 10 feet	3/4-hour wall[3] ~~No requirement on openings~~ 1/3-hour door or window[3]

(From: Report recommendation 321/22)

SECTION 47. SPS 321.08 (3) (c) is created to read:

SPS 321.08 (3) (c) *Plastic Piping*. Penetrations of a required separation by plastic pipe shall be protected by a penetration firestop system approved by the department and installed as tested in accordance with ASTM E 814 or UL 1479, with a minimum positive pressure differential of 0.01 inch of water (3 pa) and shall have an F rating of not less than the required fire-resistance rating of the assembly penetrated.

(From: Unresolved topics list dated 12/29/14, item 16)

SECTION 48. SPS 321.09 (2) (a) (Note) is created to read:

SPS 321.09 (2) (a) **Note:** Wireless interconnectivity is permitted under this paragraph.

(From: Report recommendation 321/23)

SECTION 49. SPS 321.10 (2) (f) is renumbered SPS 321.10 (2) (f) 1.

SECTION 50. SPS 321.10 (2) (f) 2. is created to read:

SPS 321.10 (2) (f) 2. Siding and sheathing in contact with concrete or masonry and within 2 inches above an impervious surface.

(From: Report recommendation 321/24 and motion 11 on 11/6/13)

SECTION 51. SPS 321.12 is renumbered SPS 321.12 (1) and amended to read:

SPS 321.12 (1) GRADE. The finished grade of the soil shall slope away from the dwelling at a rate of at least ½~~-~~inch per foot for ~~a minimum distance of~~ at least 10 feet~~, or to the lot line, whichever is less~~ except as provided in subs. (2) and (3).

SECTION 52. SPS 321.12 (title), (2), and (3) are created to read:

SPS 321.12 (title) **Drainage.**

(2) OTHER SURFACES. Where the finished surface is impervious, it shall slope away from the dwelling for at least 10 feet at a rate that ensures equivalent drainage.

(3) OBSTRUCTIONS. Where lot lines, walls, slopes or other barriers prevent having the 10-foot distance in sub. (2) or (3), swales or other means shall be provided to ensure equivalent drainage away from the dwelling.

(From: Report recommendation 321/25)

SECTION 53. SPS 321.125 (3) (a) 2. is amended to read:

SPS 321.125 (3) (a) 2. Seven and a half tons per acre per year where silt, silty clay loam or silt loam textures are exposed.

(Adds missing word)

SECTION 54. SPS 321.125 (3) (a) 2. (Note) and (b) are repealed.

SECTION 55. SPS 321.125 (3) (c) is renumbered SPS 321.125 (3) (b).

SECTION 56. SPS 321.126 is repealed.

(Repeals erosion control and storm-water provisions that have transferred to the Department of Natural Resources)

SECTION 57. SPS 321.15 (1) (e) is renumbered SPS 321.15 (1) (e) 1. and amended to read:

SPS 321.15 (1) (e) 1. Structures supported on floating slabs or similar shallow foundations may not be physically attached to structures that are supported by footings ~~that~~ which extend below the frost line unless an isolation joint is used between the structures, except as provided in subd. 2. This isolation shall extend for the full height of the structure.

SECTION 58. SPS 321.15 (1) (e) 2. is created to read:

SPS 321.15 (1) (e) 2. Exterior ramps are not required to comply with subd. 1.

SECTION 59. SPS 321.16 (1) (a) and (2) (a) are amended to read:

SPS 321.16 (1) (a) ~~Except as allowed under sub. (2), footings~~ Footings and foundations, including those for ~~ramps~~ landings and stoops, shall be placed below the frost penetration level or at least 48 inches below adjacent grade, whichever is deeper, except as allowed under sub. (2).

(2) (a) Frost protected shallow foundations shall be designed in accordance with ASCE–32 as adopted in Table ~~320.24-5~~ 320.24-4.

SECTION 60. SPS 321.16 (2) (d) is created to read:

SPS 321.16 (2) (d) Subsection (1) (a) does not apply to the footing for a ramp and its handrail posts unless the ramp abuts a frost-protected stoop or landing, in which case only the footing for that abutting end of the ramp is required to have the frost protection under sub. (1) (a), such as by bearing onto the stoop or landing, so that a tripping hazard is not created.

(From: Report recommendation 321/26, and updating the standards tables in chapter SPS 320)

SECTION 61. SPS 321.18 (1) (c) 3. a. and (d) 1. c. are amended to read:

SPS 321.18 (1) (c) 3. a. Structural steel anchor bolts, at least ½ inch in diameter, embedded at least 7 inches into the ~~[~~concrete or~~]~~ grouted masonry with a maximum spacing of 72 inches and located within 18 inches of wall corners.

(d) 1. c. Fastening of the blocking or bridging shall be in accordance with structural analysis or the fastener ~~table printed~~ schedule in ~~the appendix to this code~~ Table 321.02-2.

(From: Editorial correction)

SECTION 62. SPS 321.18 (1) (c) 3. d. and SPS 321.18 (1) (d) 2. c. (Note) are created to read:

SPS 321.18 (1) (c) 3. d. Alternate foundation anchorage, designed and spaced in accordance with structural analysis and as required to provide equivalent anchorage to the requirements of subd. 3a. is allowable.

(From: Report recommendation 321/27)

SPS 321.18 (1) (d) 2. c. **Note:** The floor-framing elements required in this section are intended to provide lateral support to the top of the foundation wall. See s. SPS 321.22 (9) for further requirements relating to floor framing, including for bridging of floor framing to provide restraint against rotation or lateral displacement of the floor framing.

(From: Editorial clarification)

SECTION 63. SPS 321.18 (4) is amended to read:

SPS 321.18 (4) WOOD FOUNDATIONS. Wood foundations shall be designed and constructed in accordance with the wood-foundation standard adopted in Table 320.24-2.

(From: Editorial correction, and updating the standards tables in chapter SPS 320)

SECTION 64. SPS 321.22 (9) (a) (Note) and (b) (Note) and (10) are created to read:

SPS 321.22 (9) (a) **Note:** This 4:1 ratio means bridging is required for wood-framed floors having nominal 2X10 or deeper solid-sawn-lumber joists, to provide restraint against rotation or lateral displacement.

(b) **Note:** See s. SPS 321.18 (1) (d) for further requirements relating to floor framing, including for bridging or blocking of floor framing to provide lateral support to the top of foundation walls.

(From: Report recommendation 321/28, and editorial clarifications)

(10) SILL PLATES. All of the following requirements apply to a sawn-lumber sill plate with uniform loading that is partially extended beyond the load-bearing surface of a foundation wall in order to put the exterior surface of an upper-lying wall flush with or beyond the exterior surface of insulation which is placed on the outside of the foundation wall:

(a) The center of any anchor bolt shall be set back from the side edge of the sill plate by a distance of at least 4 times the diameter of the bolt.

(b) The thickness of the concrete or mortar cover around any anchor bolt shall comply with ACI 318 section 7.7.

Note: Under ACI 318 section 7.7, the minimum cover for a 5/8-inch-diameter or smaller bolt is 1 1/2 inches.

(c) With wood floor joists that are parallel to the foundation wall, the sill plate may not extend beyond the load-bearing surface of the wall by more than one-half of the nominal thickness of the joist that bears on the sill plate.

Note: As used throughout this chapter and in the standards that the chapter incorporates by reference, the shorter side of the cross-sectional area of a wood member is the thickness of the member. The longer side of the cross-sectional area is the depth, when the longer side is vertical; and it is the width when the longer side is horizontal.

Note: Under subsection (6), wood floor joists that are perpendicular to the foundation wall can extend beyond the foundation wall by a distance of up to the depth of the joist.

Note: Subsection (1) (d) requires a full-width sill plate for floor joists over open-core masonry units.

(From: Report recommendation 321/29)

SECTION 65. SPS 321.24 (3) (e) and (Note) and (f) and (Note) are created to read:

SPS 321.24 (3) (e) For a roof that intersects with an upper-lying head wall and rake wall, such as where a dormer is provided, the vertical metal flashing along the rake wall shall extend down the roof at least one-half inch past the vertical flashing on the head wall.

Note: A head wall as addressed in this paragraph intersects a sloping roof at a horizontal line along the top of a roof segment. A rake wall intersects a sloping roof along the side of a roof segment.

(From: Report recommendation 321/31)

(f) For a roof eave that intersects with a sidewall, the end of the roof flashing shall be installed so that it diverts water away from the sidewall and onto the roof or into the gutter.

(From: Report recommendation 321/33)

Note: See s. SPS 321.26 (8) for further requirements relating to flashing for masonry.

(From: Editorial clarification)

SECTION 66. SPS 321.25 (2m) is created to read:

SPS 321.25 (2m) BOTTOM PLATES. (a) *Masonry foundation walls with open top course.* 1. Where a masonry foundation wall has an open top course, a bottom plate at least as wide as the foundation wall shall be fastened to the foundation.

2. Where anchor bolts are used on a masonry foundation wall with an open top course, the minimum width of an individual piece making up the bottom plate shall be at least 5.5 inches.

Note: A sill plate can be made of multiple pieces to achieve the full width.

(b) *Extension beyond the bearing surface.* All of the following requirements apply to a sawn-lumber sill plate with uniform loading that is partially extended beyond the load-bearing surface of a foundation wall in order to put the exterior surface of an upper-lying wall flush with or beyond the exterior surface of insulation which is placed on the outside of the foundation wall:

1. The center of any anchor bolt shall be set back from the side edge of the sill plate by a distance of at least 4 times the diameter of the bolt.

2. The thickness of the concrete or mortar cover around any anchor bolt shall comply with ACI 318 section 7.7.

Note: Under ACI 318 section 7.7, the minimum cover for a 5/8-inch-diameter or smaller bolt is 1 1/2 inches.

3. Where a stud wall bears directly on a double bottom plate, the plate may not extend more than 1 1/2 inches beyond the load-bearing surface of the foundation wall.

4. Where a stud wall bears directly on a single bottom plate, the plate may not extend more than 1 inch beyond the load-bearing surface of the foundation wall.

(From: Report recommendation 321/29)

SECTION 67. SPS 321.25 (3) (intro.), (a), and (b) are renumbered SPS 321.25 (3) (a) to (c).

SECTION 68. SPS 321.25 (3) (a) (title) is created to read:

SPS 321.25 (3) (a) (title) *Headers.*

(From: Editorial correction)

SECTION 69. SPS 321.25 Table 321.25–A footnote d, Table 321.25–I (title), and Table 321.25–J (title) are amended to read:

SPS 321.25 Table 321.25–A footnote [d]~~Unless supported by structural analysis, use~~ Use of stud heights that range from over 10 feet to 12 feet ~~is limited to where all of the following conditions are met: snow loads do not exceed 25 psf; tributary dimensions for floors and roofs do not exceed 6 feet; spans for floors and roofs do not exceed 12 feet; eave projections do not exceed 2 feet; the bending modulus of elasticity is at least 1,600,000 lbf per square inch; the allowable fiber stress in bending for the wood is not less than 1310 psi as determined by multiplying the AF&PA NDS tabular base design value by the repetitive use factor, and by the size factor for all species except southern pine; utility, standard, stud, and No. 3 grade lumber of any species is not used; and the~~ for bearing and exterior nonbearing walls is prohibited unless supported by structural analysis. The allowable deflection ~~does~~ may not exceed whichever of the following are applicable:

Interior walls and partitions — span height/180.
Exterior walls with plaster or stucco finish — span height/360.
Exterior walls with other brittle finishes — span height/240.
Exterior walls with flexible finishes — span height/120.
Exterior walls with interior gypsum wallboard finish — span height/180.
Any manufacturer-specified limits for any included windows or doors.

(From: Report recommendation 321/34, and updating the standards tables in chapter SPS 320 and motion 37 on 2.13.15)

Table 321.25–I (Title)
REQUIRED NUMBER OF BRACED WALL PANELS ON WALLS PARALLEL TO EACH RECTANGLE SIDE AT EACH FLOOR LEVEL[a,b,c,d,e,f,g,h,i,j]

Table 321.25–J (Title)
REQUIRED LENGTH OF CONTINUOUS BRACING ON WALLS PARALLEL TO EACH RECTANGLE SIDE AT EACH FLOOR LEVEL[a,b,c,d,e,f,g,h,i,j]

SECTION 70. SPS 321.25 Table 321.25–I footnote j and Table 321.25–J footnote j are created to read:

SPS 321.25 Table 321.25–I footnote [j]Any floor, habitable or otherwise, that is contained wholly within the roof rafters or roof trusses is exempt from being considered a floor for purposes of determining wall bracing if the top-of-wall-to-ridge height does not exceed 20 feet and if no opening in the roof exceeds 48 inches in height.

Table 321.25–J footnote [j]Any floor, habitable or otherwise, that is contained wholly within the roof rafters or roof trusses is exempt from being considered a floor for purposes of determining wall bracing if the top-of-wall-to-ridge height does not exceed 20 feet and if no opening in the roof exceeds 48 inches in height.

(From: Report recommendation 321/37 and motion 38 on 2.13.15)

SECTION 71. SPS 321.25 (8) (a) (Note) [2] is created to read:

SPS 321.25 (8) (a) **(Note)** [2]: For a walk-out basement where some of the walls are concrete and other walls or portions thereof are wood-framed, the Department considers a minimum 8-inch-nominal-thickness poured-in-place concrete basement wall as being equivalent in lateral load and shear resistance to any of the allowable wood-framed wall bracing materials. To determine the required bracing for a walk-out basement, first draw a rectangle around the entire floor plan and projections as if all of the walls are wood-framed. Determine the required bracing amounts per the chosen bracing material and method and then locate the bracing to meet the requirements of Figure

321.25-C. Any required braced wall panel locations that occur on a wall or portion of a wall that is actually of poured-in-place concrete construction is considered equivalent, and that amount of bracing will count towards the minimum required amount and will not need to be provided in another location on that rectangle side.

SECTION 72. SPS 321.26 (8) (Note) is created to read:

SPS 321.26 (8) Note: See s. SPS 321.24 (3) for further requirements relating to flashing for masonry.

(From: Editorial clarifications)

SECTION 73. SPS 321.27 (4) (d) is amended to read:

SPS 321.27 (4) (d) *Bearing.* The required bearing for wood rafters shall be in accordance with the NDS adopted in Table 320.24-2, except in no case shall the bearing be less than 1½ inches on wood or metal or less than 3 inches on masonry or concrete.

SECTION 74. SPS 321.28 (3) (a) 2. is amended to read:

SPS 321.28 (3) (a) 2. Each shingle package shall be labeled by the manufacturer to indicate conformance to the applicable ASTM standard for each type of shingle or the exception in par. ~~(c)~~ (b).

SECTION 75. SPS 321.28 (3) (a) 6. is created to read:

SPS 321.28 (3) (a) 6. All fasteners for shingles shall be corrosion-resistant.

SECTION 76. SPS 321.28 (3) (a) (Note) [2] and (b) are repealed

SECTION 77. SPS 321.28 (3) (c) is renumbered SPS 321.28 (3) (b).

(From: Updating the standards tables in chapter SPS 320, and editorial clarifications)

SECTION 78. SPS 321.28 (7) (c) is amended to read:

SPS 321.28 (7) (c) *Flashing of closed valleys.* Where shingles are laced or woven over the valley, the valley shall be flashed with ~~at~~ one of the following:

1. At least one layer of 50-pound roofing, at least 20 inches wide, over a layer of number 15 roofing underlayment.

2. A product labeled as meeting the requirements of ASTM D1970.

(From: Editorial update)

SECTION 79. SPS 322.01 (3) is renumbered SPS 322.01 (3) (a).

SECTION 80. SPS 322.01 (3) (b) is created to read:

SPS 322.01 (3) (b) The vapor retarder requirements under s. SPS 322.38 do not apply to an unheated space, such as an attached, unheated garage.

(From: Report recommendation 322/1)

SECTION 81. SPS 322.01 (3) (Note) is repealed.

(From: Report recommendation 322/2)

SECTION 82. SPS 322.20 (6) is repealed.

(From: Report recommendation 322/3)

SECTION 83. SPS 322.21 (3) (b) is amended to read:

SPS 322.21 (3) (b) The protective covering shall cover the exposed exterior insulation and extend a minimum of ~~6~~ 2 inches below grade, except the covering is not required below a brick ledge.

(From: Report recommendation 322/5)

SECTION 84. SPS 322.31 Table 322.31–4 is amended to read:

SPS 322.31 TABLE 322.31-4
(Partial Table)
COMPONENT DWELLING THERMAL ENVELOPE REQUIREMENTS FOR DWELLINGS USING LOWER EFFICIENCY APPLIANCES[a]

Fenestration U-Factor	Skylight U-Factor	Ceiling R-Value	Wood Frame Wall R-Value	Mass Wall R-Value	Floor R-Value	Basement or Crawl Space Wall R-Value[b]	Heated Slab R-Value[c]	Unheated Slab R-Value[d]
Equivalent U-Factors								

0.30	0.60	~~0.26*~~ 0.026	0.057	0.057	0.033	0.045	0.033	0.047

SECTION 85. SPS 322.31 Table 322.31–4 (Note) is repealed:

(From: Editorial correction)

SECTION 86. SPS 322.32 (1) is renumbered SPS 322.32 (1) (a).

SECTION 87. SPS 322.32 (1) (b) is created to read:

SPS 322.32 (1) (b) An attic-access cover shall be provided either with foam insulation having a thermal resistance of at least R–20 or with fiberglass insulation having a thermal resistance of at least R–38.

(From: Report recommendation 322/6)

SECTION 88. SPS 322.32 (9) is renumbered SPS 322.32 (9) (a).

SECTION 89. SPS 322.32 (9) (b) is created to read:

SPS 322.32 (9) (b) The vertical and flared walls in a skylight shall meet the insulation requirements for walls. Tube skylights shall be insulated per the manufacturer's recommendations.

(From: Report recommendation 322/7 and motion 45 on 2.13.15)

SECTION 90. SPS 322.33 (1) is renumbered SPS 322.33 (1) (a) and amended to read:

SPS 322.33 (1) (a) Any heated or unheated slab floor, the bottom of which is less than 12 inches below adjacent grade, shall be provided with perimeter insulation in accordance with Table 322.31-1 or Table 322.31-4, except as provided in par. (b).

SECTION 91. SPS 322.33 (1) (b) is created to read:

SPS 322.33 (1) (b) At the threshold or the base of any door opening that leads directly to the exterior of the structure, the vertical perimeter insulation shall be at least R-5

(From: Report recommendation 322/9)

SECTION 92. SPS 322.33 (3) (c) is created to read:

SPS 322.33 (3) (c) Insulation on a foundation wall for a basement may terminate at a junction with a foundation wall for an unheated, attached garage.

(From: Report recommendation 322/8)

SECTION 93. SPS 322.34 (2) (d) is amended to read:

SPS 322.34 (2) (d) The edges of the vapor retarder shall extend at least 6 inches up the foundation wall and shall be attached and sealed to the foundation wall or insulation.

(From: Unresolved topics list dated 12/29/14, item #14)

SECTION 94. SPS 322.38 (1) (b) is renumbered SPS 322.38 (1) (b) 1. and amended to read:

SPS 322.38 (1) (b) 1. The vapor retarder shall be continuous. All joints in a vapor retarder consisting of sheet material shall be overlapped 6 inches and taped or sealed, except as provided in subd. 2. Rips, punctures and voids in the vapor retarder shall be patched with vapor retarder materials and taped or sealed. Seams that are not over a framing member shall be sealed or taped.

SECTION 95. SPS 322.38 (1) (b) 2. is created to read:

SPS 322.38 (1) (b) 2. Taping or sealing a vapor retarder is not required around doors and windows, behind bathtub enclosures, and at top and bottom wall plates, if the retarder is held to those materials in an airtight manner by other building components, such as gypsum wallboard.

(From: Report recommendation 322/10)

SECTION 96. SPS 322.38 (2) (c) 4. is amended to read:

SPS 322.38 (2) (c) 4. No vapor retarder is required over cavities that ~~are insulated solely with~~ have at least 50% of the required R-value provided by spray-applied foam having a perm rating of 1.0 or less, unless required by the foam manufacturer.

SECTION 97. SPS 322.38 (2) (c) 4. (Note) is repealed.

(From: Report recommendation 322/12)

SECTION 98. SPS 322.38 (2) (c) 5. is created to read:

SPS 322.38 (2) (c) 5. A vapor retarder for a floor over an open, unheated area may consist of 5/8-inch tongue-and-groove oriented-strand board, or 3/4-inch tongue-and-groove CDX plywood, which is exposure-rated plywood.

(From: Report recommendation 322/11)

SECTION 99. SPS 322.42 (2) is renumbered SPS 322.42 (3).

SECTION 100. SPS 322.42 (2) is created to read.

SPS 322.42 (2) Cooling supply ducts that pass through unconditioned spaces conducive to condensation, such as attics, shall be provided with insulation having a thermal resistance of at least R–8. The exterior of that insulation shall be covered with a vapor retarder which meets the requirements in s. SPS 322.38 (1)

(From: Report recommendation 323/9)

SECTION 101. SPS 323.04 Table 323.04–A footnote 5 is amended to read:

SPS 323.04 Table 323.04–A footnote [5]To combustible material or metal cabinets. If the underside of such combustible material or metal cabinet is protected with asbestos millboard at least 1/4-inch thick covered with sheet metal of not less than No. 28 gauge, the distance may be not less than 24 inches. <u>Also, if the manufacturer of the range, cooktop, or cooking stove specifies a shorter clearance, that clearance may be used instead.</u>

(From: Report recommendation 323/3)

SECTION 102. SPS 323.04 (4) (title) is renumbered SPS 323.04 (title) to (b) and, as renumbered, is amended to read::

SPS 323.04 (4) (title) BOILERS.

<u>(a)</u> Boilers and solid fuel-fired water-heating appliances that serve a one-or 2-family dwelling, whether located inside or outside the dwelling, shall comply with ch. SPS 341, Boilers and Pressure Vessels.

<u>(b) Solid fuel-fired water-heating appliances installed inside one or two family dwellings are exempt from the requirements of SPS 341.49 (3).</u>

(From: Report recommendation 323/1)

SECTION 103. SPS 323.04 (4) (Note) [2] is created to read:

Note [2]: The appliances addressed in this section include non-pressurized solid-fuel-fired water-heating appliances used for space heating.

SECTION 104. SPS 323.045 (5) (a) is renumbered SPS 323.045 (5).

(From: Editorial correction)

SECTION 105. SPS 323.045 (5m) is created to read:

SPS 323.045 (5m) MOUNTING ON THE GROUND. Ground-based solid-fuel-burning appliances shall be installed in accordance with the manufacturer's specifications.

(From: Report recommendation 323/4 and motion 7 on 4.9.14. SPS 323.045 (5) addresses mounting these appliances on combustible floors, in accordance with the manufacturer's instructions.)

SECTION 106. SPS 323.045 (6) (a) (title) is created to read:

SPS 323.045 (6) (a) (title) *General.*

SECTION 107. SPS 323.045 (6) (a) 1. and 2. are renumbered SPS 323.045 (6) (b) and (c).

SECTION 108. SPS 323.045 (6) (a) is amended to read:

SPS 323.045 (6) (a) Solid-fuel-burning appliances shall be installed with clearances not less than specified in Table 323.045-D, except as provided in pars. (b) and (c).

SECTION 109. SPS 323.045 (8) (intro.) is amended to read:

SPS 323.045 (8) (intro.) SUPPLEMENTAL UNITS. Supplemental solid-fuel-burning units connected to a furnace shall be connected to the warm air side of the furnace as illustrated in Figures 323.045-C to E~~.~~, and shall be installed in accordance with all of the following:

(From: Editorial correction)

SECTION 110. SPS 323.06 (1) (d), (e), and (f) are created to read:

SPS 323.06 (1) (d) Listed fireplace stoves are not required to comply with this section if permitted in the manufacturer's instructions.

(e) Masonry fireplaces shall conform to the requirements of s. SPS 321.29.

(f) Listed factory-built fireplaces shall comply with the manufacturer's recommendations and shall conform with the requirements of s. SPS 321.32.

(From: Report recommendation 323/6)

SECTION 111. SPS 323.14 (1) is renumbered SPS 323.14 (1) (a).

SECTION 112. SPS 323.14 (1) (b) is created to read:

SPS 323.14 (1) (b) Plastic pipes and fittings used in venting flue gas shall bear the manufacturer's identification data.

(From: Report recommendation 323/7)

SECTION 113. SPS 323.14 (2) (a) is renumbered SPS 323.14 (2) (a) 2. and amended to read:

SPS 323.14 (2) (a) 2. Gas-fired clothes dryers shall be provided with metal venting ~~that terminates outside the structure~~.

(Repeals duplicating a chapter SPS 322 requirement)

SECTION 114. SPS 323.14 (2) (a) 1. is created to read:

SPS 323.14 (2) (a) 1. All venting for clothes dryers, including for electric dryers, shall be rigid and smooth-walled. The connection to the dryer shall be as per the manufacturer's recommendations.

(From: Report recommendation 323/8 and motion 59 on 5.13.15)

SECTION 115. SPS 323.16 (2) (a) is amended to read:

SPS 323.16 (2) (a) The total oil storage capacity inside any dwelling unit shall be limited to 550 gallons in one tank, or not more than 275 gallons in each of 2 tanks cross−connected to a single burner.

(From: Editorial correction)

SECTION 116. SPS 325.01 is renumbered SPS 325.01 (1) and amended to read:

SPS 325.01 (1) The design, construction and installation of plumbing shall comply with the requirements of the Wisconsin Plumbing Code, chs. SPS 382 to 387, except as provided in this section.

SECTION 117. SPS 325.01 (1) (title) and (2) to (4) are created to read:

SPS 325.01 (title) GENERAL.

(2) TANK-LESS WATER HEATERS. (a) The minimum flow rate of a tank-less type water heater may be obtained by multiplying 0.65 by the calculated hot water gallons per minute demand, as determined by SPS 382 Tables 382.40–1b and 382.40–3, provided the heater will achieve a water temperature of 110 degrees F at the terminal fitting or faucet.

(b) The sizing method in par. (a) may not be used for sizing a water heater serving a high-flow fixture, a hose bibb, a hydrant, or a fixture that is required to have a supply line with a diameter larger than one-half inch.

(c) For the purposes of this subsection, "high-flow fixture" means a fixture with a flow rate of more than 4 gallons per minute, at 80 pounds per square inch, and a water velocity not exceeding 8 feet per second.

(From: Report recommendation 325/1)

(3) LOCAL WASTE PIPING. A trap may be omitted in local waste piping having a length of up to 20 feet.

(From: Report recommendation 325/2)

(4) FLOOR DRAINS FOR GARAGES. (a) A trap may be omitted for a garage-floor drain that discharges to the ground surface.

(b) The sediment trap for a garage-floor drain shall be removable.

(c) The grate for a garage-floor drain may be nonmetallic if it has a thickness and strength that will withstand the anticipated loads.

(From: Report recommendation 325/3)

SECTION 118. EFFECTIVE DATE. The rules adopted in this order shall take effect on the first day of the month following publication in the Wisconsin administrative register, pursuant to s. 227.22 (2) (intro.), Stats.

(END OF TEXT OF RULE)

Dated _____ Agency _____

Dave Ross, Secretary of the
Department of Safety and
Professional Services

File reference: SPS 320-325/Rules From Report 6

Decks

[From motion 4 at the December 2013 UDC Council meeting, and motion 3 at the February 2014 Council meeting]

SECTION 1. SPS 321.225 (intro.) and (1) to (6) are renumbered SPS 321.225 (1) (intro.) and (a) to (f), and SPS 321.225 (1) (intro.) and e. as renumbered, are amended to read:

SPS 321.225 Decks. (1) Decks attached to dwellings and any detached ~~decks which serves~~ deck that serves an exit shall comply with the applicable provisions of ~~this chapter~~ subchs. II to X, including ~~but not limited to~~ all of the following:

e. Stair, handrail and ~~guardrail~~ guard requirements of s. SPS 321.04; and

SECTION 2. SPS 321.225 (2) is created to read:

SPS 321.225 (2) A deck that complies with the standards in Appendix B, and Appendix C if applicable, shall be considered as complying with sub. (1).

SECTION 3. SPS 321.24 (3) (d) 8. and (Note) are created to read:

SPS 321.24 (3) (d) 8. Along the bottom of door openings that are elevated above-grade.

Note: Flashing placed along the bottom of a door opening that is elevated above-grade can subsequently accommodate adding a deck outside the door.

[From motion 9 at the February 2014 UDC Council meeting]

SECTION 4. SPS 324.01 is renumbered SPS 324.01 (1) and amended to read:

SPS 324.01 (1) All electrical wiring, installations, equipment and materials used in the construction of dwellings shall comply with the requirements of the Wisconsin Administrative Electrical Code, Vol. 2., ch. SPS 316, except as provided in sub. (2).

SECTION 5. SPS 324.01 (2) and (Note) are created to read:

SPS 324.01 (2) The requirements in NEC section 210.70(A)(2)(b) do not apply to a stairway for a deck.

Note: A light over the stairs is not required, but a light outside the door is.

SECTION 6. Chapters SPS 320 – 325 Appendix is renumbered Chapters SPS 320 – 325 Appendix A.

SECTION 7. Chapters SPS 320 to 325 Appendix B is created to read:

[Starts on next page, in order to show how the deck rules will look as a stand-alone document.]

Chapters SPS 320 – 325 Appendix B
Prescriptive Deck Standards

CONTENTS

Section		Page
1	GENERAL REQUIREMENTS	1
2	FOOTINGS, AND POST CONNECTIONS	2
3	POSTS AND POST-TO-BEAM CONNECTIONS	4
4	BEAMS	4
5	JOISTS	6
6	JOIST-TO-BEAM CONNECTIONS	8
7	JOIST HANGERS	8
8	LEDGER ATTACHMENTS	9
9	LEDGER-BOARD FASTENERS	11
10	FREE-STANDING DECKS	13
11	LATERAL SUPPORT	13
12	DECKING	16
13	GUARD AND POSTS	16
14	STAIRS	18
15	FRAMING PLAN	21

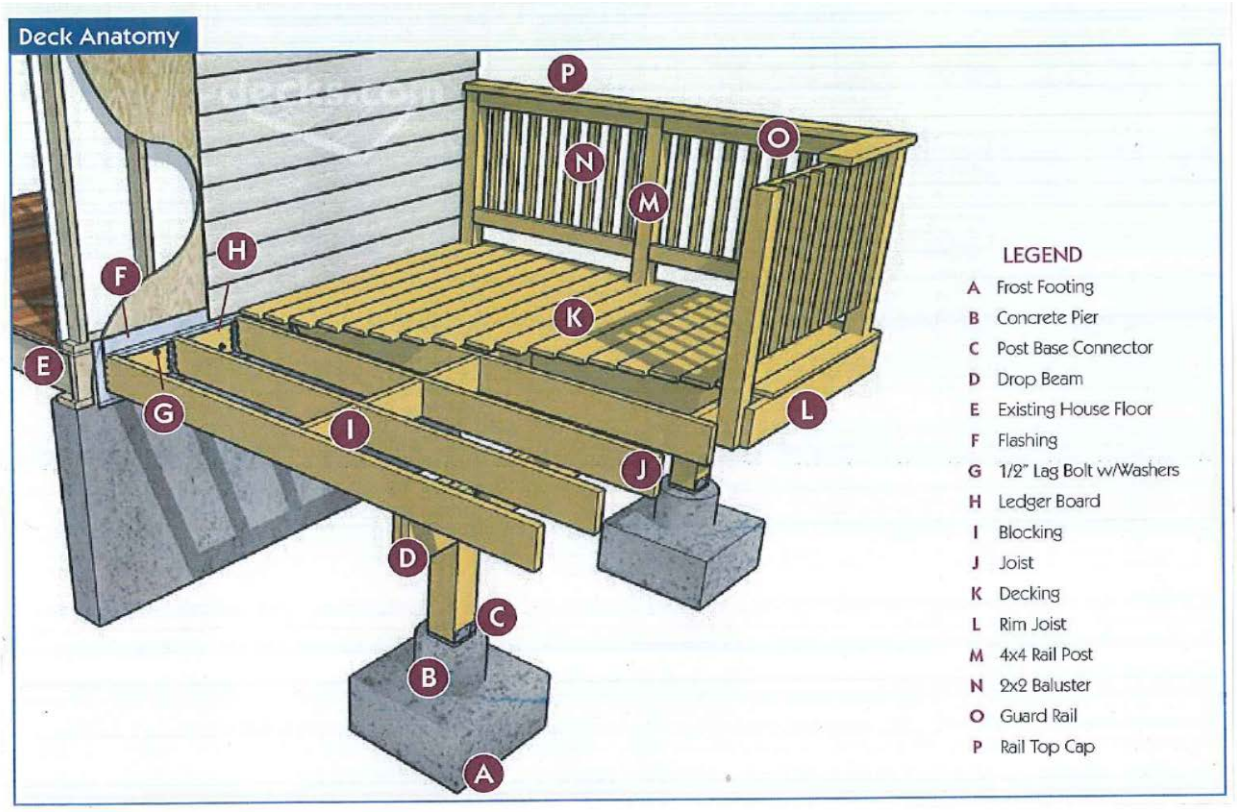

SECTION 1: GENERAL REQUIREMENTS

1. All lumber, including for decking, must be pressure-preservative-treated and must be either douglas fir/larch, hemlock/fir, spruce/pine/fir (SPF), or southern pine, of grade #2 or better – unless a naturally durable species such as a western red cedar is used. Lumber in contact with the ground must be rated as "ground-contact." The lumber must be identified by the grade mark of, or certificate of inspection issued by, a professional lumber-grading or inspection bureau or agency (www.alsc.org).

   Note: Not all treated lumber is rated for ground contact. See Table C-1 in Appendix C for further information.

2. Wood-plastic composites must bear a label indicating their performance criteria and compliance with ASTM D7032.

   Note: Wood-plastic composites are materials composed of wood fibers or powder that is bound with plastic and used typically as decking and elements of a guard or handrail.

   Note: When using a wood-plastic composite, exercise caution as some composite members do not have the same capabilities as their equivalent wood sizes.

3. Nails must be threaded, which includes ring-shanked (annular-grooved) and spiral-grooved.

   Note: A ⅛-inch pilot hole is recommended for all toe-nailing locations.

4. All fasteners must be galvanized steel, stainless steel, or approved for use with preservative-treated lumber.

5. Throughout this document, ½-inch-diameter bolts and lag screws are specified for various connections. Edge distance and spacing requirements are based on ½-inch-diameter fasteners. If larger (or smaller) fasteners are specified, edge distance and spacing need to be adjusted.

6. Carriage-bolts may be substituted where through-bolts are specified, if carriage-bolt washers are installed at the bolt head.

   Note: Carriage-bolt washers have square holes.

7. Hardware, including joist hangers or post anchors, must be galvanized steel with 1.85 ounces of zinc per square foot (G-185 coating), or stainless steel. All fasteners that are used with any hardware must be the same material as the hardware. All hardware must be installed in accordance with any instructions from the manufacturer.

   Note: For galvanized steel, look for product lines such as "Zmax," "Triple Zinc," or "Gold Coat."

   Note: Galvanized steel is not compatible with stainless steel, which can result in rapid corrosion and structural failure.

   Note: Hardware and fasteners that are beneath a hot tub which uses salt-water disinfection should be stainless steel, grade 304 or 316.

8. Every deck must have an electrical outlet along the perimeter of the deck and within 6.5 feet of the floor in accordance with NEC section 210.52(E)(3). See chapter SPS 316 of the Wisconsin Administrative Code for requirements about installing electrical wiring.

9. A deck constructed in accordance with these standards is not approved for concentrated loads that exceed 40 pounds per square foot (psf), such as from privacy screens, planters, built-in seating, hot tubs, stairs for multiple-level decks, or from snow-drift loads or sliding-snow loads. Engineering analysis is needed for these loads.

   Note: Publication *DCA 6* from the American Wood Council is considered equivalent to these standards and can be used to obtain a permit in Wisconsin. Go to awc.org to learn more or to download *DCA 6*.

   Note: See Appendix C for features of a deck which are somewhat uncommon or which have more complexity than is addressed in this Appendix – such as design values for joists consisting of western cedar or red pine, framing details around chimneys and bay windows, or ledger boards for metal-plate-connected wood floor trusses. Appendix C also includes reference material, such as more-detailed specifications for fasteners.

10. Specifications for fasteners and hardware**.** All nails must meet the requirements of ASTM F1667. Wood screws must meet the requirements of ANSI/ASME B18.6.1. Bolts and lag screws must meet the requirements of ANSI/ASME B18.2.1.

    Fasteners to be hot-dipped galvanized must meet the requirements of ASTM A153, *Standard Specification for Zinc Coating (Hot-Dip) on Iron and Steel Hardware*, Class D for fasteners $^{3}/_{8}$" diameter and smaller or Class C for fasteners with diameters over $^{3}/_{8}$".

    Fasteners other than nails and timber rivets may consist of mechanically deposited zinc-coated steel with coating weights in accordance with ASTM B695, Class 55, minimum.

    Hardware to be hot-dipped prior to fabrication must meet ASTM A653, *Standard Specification for Steel Sheet, Zinc-Coated (Galvanized) or Zinc-Iron Alloy-Coated (Galvannealed) by the Hot-Dip Process*, G-185 coating. Hardware to be hot-dipped galvanized

after fabrication must meet ASTM A123, *Specification for Zinc (Hot-Dip Galvanized) Coatings on Iron and Steel Products.*

11. Safety glazing at decks shall be in accordance with the safety glazing requirements of the UDC.

SECTION 2: FOOTINGS, AND POST CONNECTIONS

Footings must comply with all of the following:

1. Concrete must be used and must have a minimum compressive strength of 3,000 pounds per square inch.
2. Footing size and thickness must be in accordance with Table 1. (See sections 4 and 5 for determining post spacing and joist length.)
3. Post attachments must be in accordance with Figure 1 except expansion anchors are also permitted – and any instructions from the manufacturer of the anchor must be followed.
4. Post anchors must include a 1-inch-minimum base plate. Steel plates are not required.
5. Each post must bear directly over the middle one-third of a footing.
6. Footings must bear on solid ground below the frost penetration level or at least 48 inches below finished grade, whichever is deeper. Bearing onto unprepared fill material, organic soil, alluvial soil, or mud is prohibited. The bearing capacity of the soil is presumed to be at least 2000 pounds per square foot (psf), and must be verified by a building inspector prior to placement of concrete.
7. If the edge of a deck footing is closer than 5 feet to an existing house wall, the footing must bear at the same elevation as the existing footing for that wall.
8. Construction of footings over utility lines or any service pipe is prohibited.
   Note: Call the utility provider before digging.

Table 1
FOOTING SIZE (In Inches)[1,2,3]

Joist Length		Post Spacing (Measured Center to Center)										
		4'	5'	6'	7'	8'	9'	10'	11'	12'	13'	14'
6'	Corner Footing	8	9	10	11	11	12	12	13	14	14	15
	Intermediate Footing	10	11	12	13	14	15	15	16	17	17	18
	Footing Thickness	6	6	6	6	6	6	6	6	6	6	8
7'	Corner Footing	9	10	11	11	12	13	13	14	15	15	16
	Intermediate Footing	11	12	13	14	15	16	17	17	18	19	19
	Footing Thickness	6	6	6	6	6	6	6	6	8	8	8
8'	Corner Footing	10	10	11	12	13	14	14	15	15	16	17
	Intermediate Footing	12	13	14	15	16	17	18	19	19	20	21
	Footing Thickness	6	6	6	6	6	6	8	8	8	8	8
9'	Corner Footing	10	11	12	13	14	14	15	16	16	17	18
	Intermediate Footing	12	14	15	16	17	18	19	20	20	21	22
	Footing Thickness	6	6	6	6	6	8	8	8	8	8	8
10'	Corner Footing	10	12	12	13	14	15	16	16	17	18	18
	Intermediate Footing	13	14	15	17	18	19	20	21	21	22	23
	Footing Thickness	6	6	6	6	8	8	8	8	8	8	10
11'	Corner Footing	11	12	13	14	15	16	16	17	18	19	19
	Intermediate Footing	13	15	16	17	19	20	21	22	22	23	24
	Footing Thickness	6	6	6	6	8	8	8	8	8	10	10
12'	Corner Footing	11	12	14	15	15	16	17	18	19	19	20
	Intermediate Footing	14	15	17	18	19	20	21	22	23	24	25
	Footing Thickness	6	6	6	8	8	8	8	8	10	10	10
13'	Corner Footing	12	13	14	15	16	17	18	19	19	20	21
	Intermediate Footing	14	16	17	19	20	21	22	23	24	25	26
	Footing Thickness	6	6	6	8	8	8	8	10	10	10	10
14'	Corner Footing	12	13	15	16	17	18	18	19	20	21	22
	Intermediate Footing	15	17	18	19	21	22	23	24	25	26	27
	Footing Thickness	6	6	8	8	8	8	10	10	10	10	10
15'	Corner Footing	12	14	15	16	17	18	19	20	21	22	22
	Intermediate Footing	15	17	19	20	21	23	24	25	26	27	28
	Footing Thickness	6	6	8	8	8	10	10	10	10	10	12
16'	Corner Footing	13	14	15	17	18	19	20	20	21	22	23
	Intermediate Footing	16	18	19	21	22	23	25	26	27	28	29
	Footing Thickness	6	8	8	8	8	10	10	10	10	12	12

[1]All footing sizes are base diameters[2].

[2]For square footings, insert the diameter (d) into the following formula: $\sqrt{((d/2)^2 \times \pi)}$. This number will give you the square dimension and must be rounded up to the nearest inch.

[3]Joist length is the joist span plus any overhang beyond a beam. See section 5.4.

Figure 1
FOOTINGS

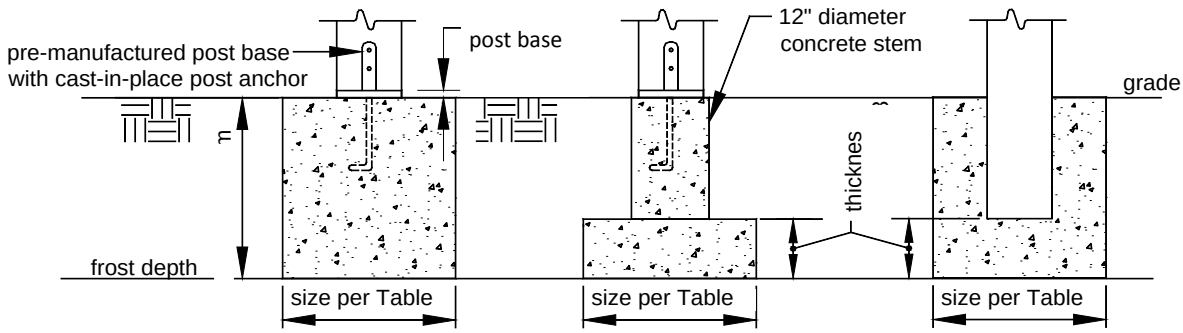

SECTION 3: POSTS AND POST-TO-BEAM CONNECTIONS

Posts must comply with all of the following:

1. The post height, measured from the top of the footing to the underside of the beam, must be in accordance with Table 2.

Table 2
MAXIMUM POST HEIGHT

Post Size	Maximum Height
4x4	6'
4x6	8'
6x6	14'

2. Any post supporting a beam splice must be a minimum of 6x6.
3. Beams must be attached to posts by the appropriate methods shown in Figure 2. Toe-nailing of beams to posts is prohibited.
4. Post caps, as shown in Figure 2, must be specifically designed for 2- or 3-ply beams and the post size used. Attachment must be in accordance with the manufacturer's instructions.
5. It is recommended that cut-ends of posts should be field-treated with a wood preservative. These preservatives can be found in the paint department of most hardware or home-center stores.

Figure 2
POST-TO-BEAM CONNECTIONS

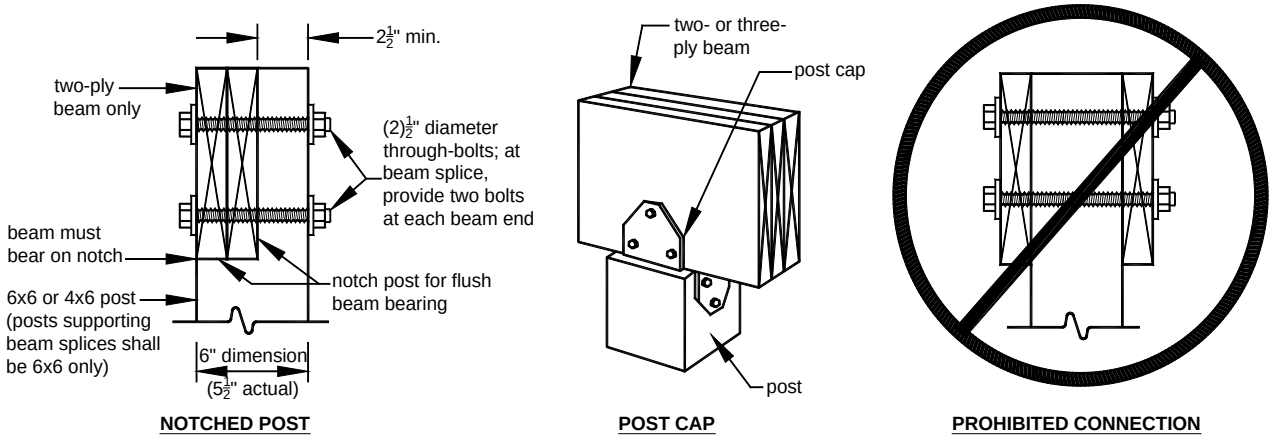

Beams must comply with all of the following:

1. As shown in Figure 3, the beam-span length is measured between the centerlines of two adjacent posts and does not include the overhangs.
2. Beam size is determined using Table 3A or 3B. The depth of flush beams must be greater than or equal to the joist depth.
3. Beams may overhang past the center of the post up to one-fourth of the actual beam span, as shown in Figure 3.
4. Where multiple 2x members are used to assemble a beam, the plies of the beam must be fastened in accordance with Figure 4.
5. Pressure-preservative-treated glulam beams are permissible for spans longer than those shown in Table 3. However, a design and plan submission is required during the permit application process.

Figure 3
BEAM TYPES

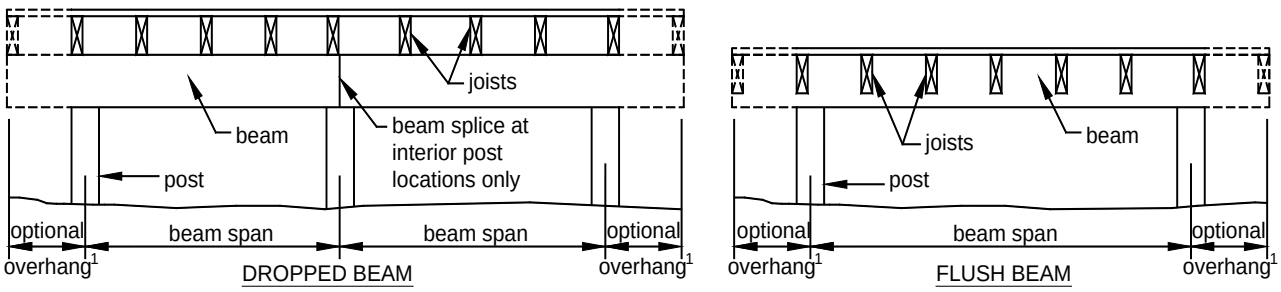

[1]The maximum length of the overhang is equal to one-fourth of the actual beam span length (0.25 x beam span).

Table 3A
MAXIMUM BEAM-SPAN LENGTH[1] FOR DOUGLAS FIR/LARCH[3], HEM/FIR[3], SPRUCE/PINE/FIR (SPF)[3], WESTERN CEDAR, PONDEROSA PINE[4], AND RED PINE[4]

Joist Span	(Number of Plies) Beam Size[2] – Inches											
	3x6 (2)2x6	3x8 (2)2x8	3x10 (2)2x10	3x12 (2)2x12	4x6	4x8	4x10	4x12	(3)2x6	(3)2x8	(3)2x10	(3)2x12
≤ 6'	5'-5"	6'-10"	8'-4"	9'-8"	6'-5"	8'-5"	9'-11"	11'-5"	7'-4"	9'-8"	12'-0"	13'-11"
≤ 8'	4'-8"	5'-11"	7'-3"	8'-5"	5'-6"	7'-3"	8'-7"	9'-11"	6'-8"	8'-6"	10'-5"	12'-1"
≤ 10'	4'-2"	5'-4"	6'-6"	7'-6"	4'-11"	6'-6"	7'-8"	8'-10"	6'-0"	7'-7"	9'-4"	10'-9"
≤ 12'	3'-10"	4'-10"	5'-11"	6'-10"	4'-6"	5'-11"	7'-0"	8'-1"	5'-6"	6'-11"	8'-6"	9'-10"
≤ 14'	3'-6"	4'-6"	5'-6"	6'-4"	4'-2"	5'-6"	6'-6"	7'-6"	5'-1"	6'-5"	7'-10"	9'-1"
≤ 16'	3'-1"	4'-1"	5'-1"	5'-11"	3'-11"	5'-2"	6'-1"	7'-0"	4'-9"	6'-0"	7'-4"	8'-6"
≤ 18'	2'-9"	3'-8"	4'-8"	5'-7"	3'-8"	4'-10"	5'-8"	6'-7"	4'-6"	5'-8"	6'-11"	8'-1"

[1]Spans are based on 40 psf live load, 10 psf dead load, normal loading duration, wet service conditions, and deflections of Δ=L/360 for main span and L/180 for overhang with a 220 lb. point load.

[2]Beam depth must be equal to or greater than joist depth if joist hangers are used (see Figure 8, Option 3).

[3]Incising is assumed.

[4]Design values based on northern species with no incising assumed.

Table 3B
MAXIMUM BEAM-SPAN LENGTH FOR SOUTHERN PINE[1]

Joist Span	(Number of Plies) Beam Size[2] – Inches							
	(2) 2x6	(2) 2x8	(2) 2x10	(2) 2x12	(3) 2x6	(3) 2x8	(3) 2x10	(3) 2x12
≤ 6'	6'-11"	8'-9"	10'-4"	12'-2"	8'-2"	10'-10"	13'-0"	15'-3"
≤ 8'	5'-11"	7'-7"	9'-0"	10'-7"	7'-5"	9'-6"	11'-3"	13'-3"
≤ 10'	5'-4"	6'-9"	8'-0"	9'-5"	6'-8"	8'-6"	10'-0"	11'-10"
≤ 12'	4'-10"	6'-2"	7'-4"	8'-7"	6'-1"	7'-9"	9'-2"	10'-9"
≤ 14'	4'-6"	5'-9"	6'-9"	8'-0"	5'-8"	7'-2"	8'-6"	10'-0"
≤ 16'	4'-3"	5'-4"	6'-4"	7'-6"	5'-3"	6'-8"	7'-11"	9'-4"
≤ 18'	4'-0"	5'-0"	6'-0"	7'-0"	5'-0"	6'-4"	7'-6"	8'-10"

[1]Spans are based on 40 psf live load, 10 psf dead load, normal loading duration, wet service conditions, and deflections of Δ=L/360 for main span and L/180 for overhang with a 220 lb. point load.

[2]Beam depth must be equal to or greater than joist depth if joist hangers are used (see Figure 8, Option 3).

Figure 4
BEAM ASSEMBLY

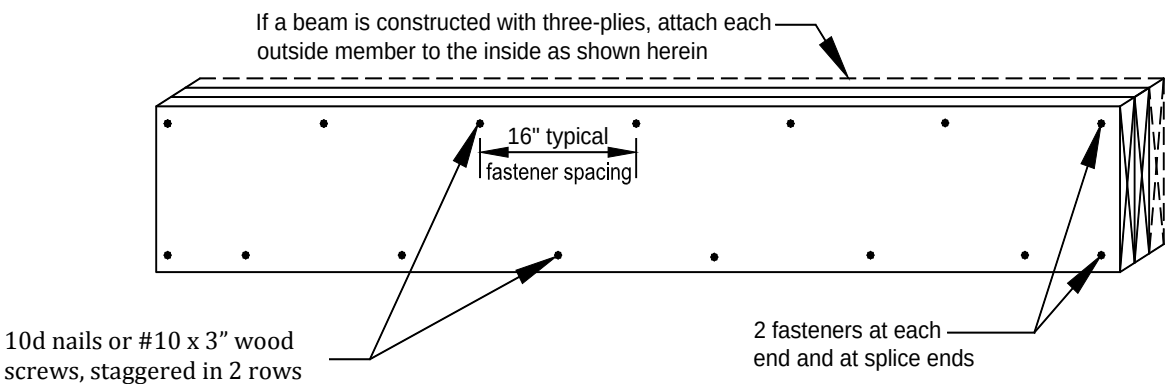

SECTION 5: JOISTS

Joists must comply with all of the following:

1. The joist-span length is measured between the centerline of bearing at each joist-span end and does not include the overhangs. Use Table 4 to determine the joist size based on span length and joist spacing. See section 12.4 for limits on joist spacing if the decking consists of a wood-plastic composite.
2. See Figures 5 through 7 for joist-span types.
3. Joists must bear at least 3 inches nominal onto beams, unless joist hangers are used in accordance with section 7.
4. Joists may overhang past the center of the beam up to one-fourth of the actual joist span.
5. Provide full-depth 2x blocking or bridging for 2x10 or deeper joists at intervals not exceeding 8 feet – except the blocking can be reduced to 60% of the height if placed above a beam, for drainage purposes. Attach the blocking or bridging with (3)10d toe-nails at each end.
6. Attach a continuous rim joist as shown in Figures 5 and 7 unless blocking or bridging is provided for each joist at the beam where a joist overhang begins. Attach the rim joist to the end of each joist with (3)10d nails or (3)#10 by 3-inch wood screws.

Figure 5
JOISTS WITH DROPPED BEAM – DECK ATTACHED AT HOUSE

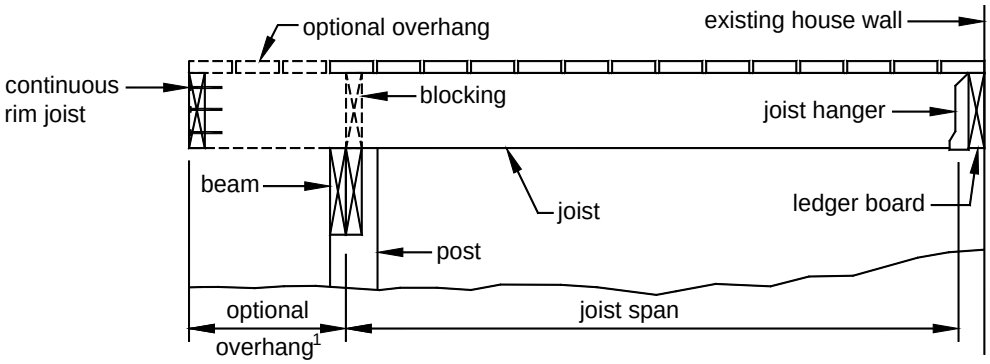

[1]The maximum length of the overhang is equal to one-fourth of the actual joist span length (0.25 x joist span).

Figure 6
JOISTS WITH FLUSH BEAM – DECK ATTACHED AT HOUSE

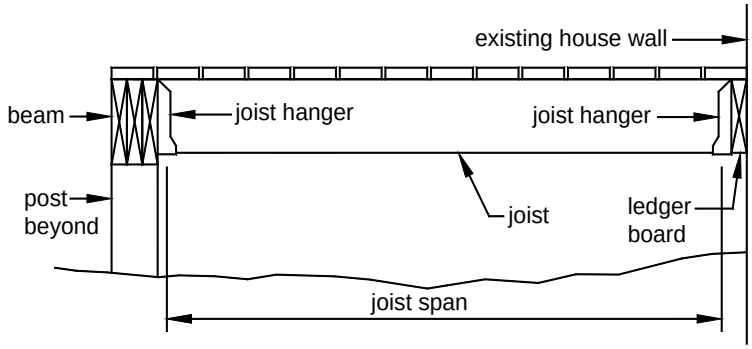

Figure 7
JOISTS WITH TWO DROPPED BEAMS/FREE-STANDING DECK

(See section 10 for more information.)

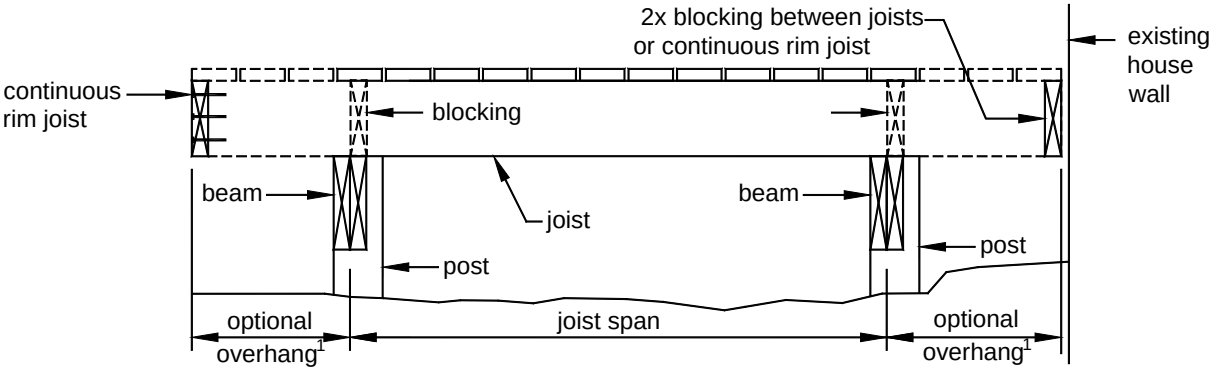

[1]The maximum length of the overhang is equal to one-fourth of the actual joist span length (0.25 x joist span).

Table 4
MAXIMUM JOIST-SPAN LENGTH[1]

Joist Spacing (on center)	Joist Size	Douglas Fir/Larch, Hem/Fir, SPF[2]		Southern Pine	
		Without Overhang	With Overhangs	Without Overhang	With Overhangs
12"	2x6	9'-1"	8'-1"	9'-6"	8'-7"
	2x8	12'-6"	9'-5"	13'-1"	10'-1"
	2x10	15'-8"	13'-7"	16'-2"	14'-6"
	2x12	18'-0"	18'-0"	18'-0"	18'-0"
16"	2x6	8'-3"	8'-0"	8'-7"	8'-7"
	2x8	11'-1"	9'-5"	11'-10"	10'-1"
	2x10	13'-7"	13'-7"	14'-0"	14'-0"
	2x12	15'-9"	15'-9"	16'-6"	16'-6"
24"	2x6	6'-9"	6'-9"	7'-6"	7'-6"
	2x8	9'-1"	9'-1"	9'-8"	9'-8"
	2x10	11'-1"	11'-1"	11'-5"	11'-5"
	2x12	12'-10"	12'-10"	13'-6"	13'-6"

[1]Spans are based on 40 psf live load, 10 psf dead load, normal loading duration, wet service conditions and deflections of Δ=L/360 for main span and L/180 for overhang with a 220 lbs. point load.
[2]Incising is assumed.

SECTION 6: JOIST-TO-BEAM CONNECTIONS

Joists must be attached to beams in accordance with Figure 8 and all of the following:

1. Use Options 1 or 2 if joists bear on a dropped beam.
2. Use Option 3 if joists bear at a flush beam; see section 7 for hanger requirements.
3. Mechanical fasteners or hurricane clips must have a minimum capacity of 100 pounds in both uplift and lateral directions. Installation must be in accordance with the manufacturer's instructions.

Figure 8
JOIST-TO-BEAM CONNECTIONS

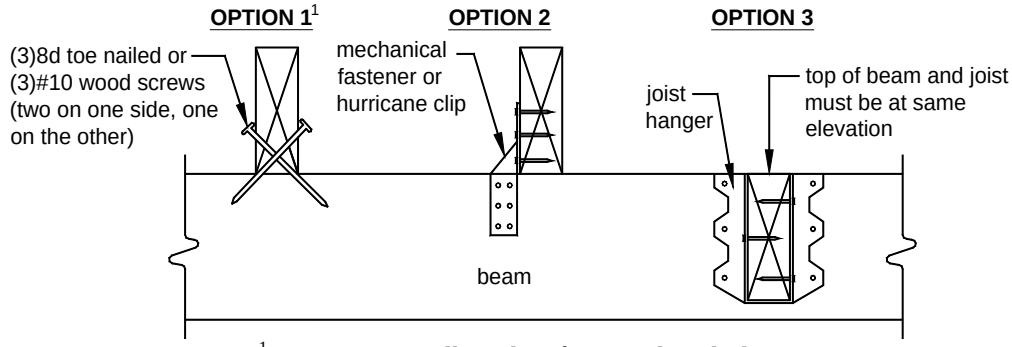

[1]Option 1 is not allowed on free-standing decks.

SECTION 7: JOIST HANGERS

Joist hangers must comply with all of the following:

1. The joist-hanger depth (d, as shown in Figure 9) must be at least 60 percent of the joist depth.
2. The manufactured width of the joist hanger must accommodate the number of plies being carried.
3. Do not bend hanger flanges to accommodate field conditions.

4. For joist hangers that are fastened to a ledger board, screws which are recommended by the manufacturer must be used. All other fasteners are permitted to be nails. The number of fasteners and the manner in which they are used must be as specified by the manufacturer.
5. Use joist hangers with inside flanges if clearances to the edge of the beam or ledger board dictate.
6. Clip-angles or brackets used to support framing members in lieu of joist hangers are prohibited.
7. Joists must not frame in from both sides of the same beam. Engineering analysis is needed if more beams are needed than are shown in Figures 5 to 7.
8. Each joist hanger must have the minimum capacity listed in Table 5.

Figure 9
JOIST HANGERS

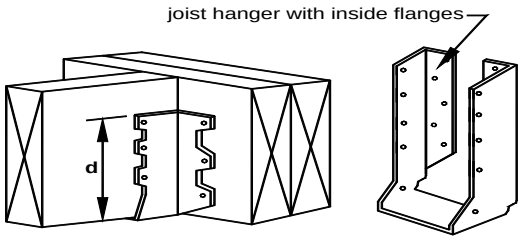

Table 5
JOIST HANGER DOWNLOAD

Joist Size	Minimum Capacity, lbs
2x6	500
2x8	500
2x10	600
2x12	700

SECTION 8: LEDGER ATTACHMENTS

General requirements. Ledger boards must be attached to the existing house in accordance with all of the following and section 9. Compliance is critical to ensure the safety and structural stability of your deck.

1. The ledger-board depth must be greater than or equal to the depth of the deck joists, but not less than a 2x8 – and must be less than or equal to the depth of the band board on the house.
2. The ledger board must be attached in accordance with one of the conditions shown in Figures 11 through 13 – except if metal-plate-connected wood floor trusses were used in the house, see the text below for manufactured wood trusses.
3. The existing band board on the house must be capable of supporting the deck. If this cannot be verified or if existing conditions differ from the details here, then a free-standing deck or an engineered design is required.
4. The top of the ledger board and the top of the deck joists must be at the same elevation.

Wood I-joists. Many homes are constructed with wood I-joists, as shown in Figure 10. Rather than utilize a 2x band board, these systems are often constructed with a minimum 1-inch-thick engineered wood product (EWP) band board capable of supporting a deck. If a minimum 1-inch EWP or 2x band board is not present, then a free-standing deck is required, as addressed in section 10.

Figure 10: WOOD I-JOISTS

Manufactured wood trusses. A metal-plate-connected wood truss (MPCWT) is an engineered, prefabricated structural component that is designed for each specific application. MPCWT systems that are used in residential floors are often installed with a 2x4 lumber "ribbon" board at the ends of the trusses to tie the ends of the trusses together (see Detail 1 in section 7 of Appendix C.). The ribbon board, by itself, is not intended to support the deck ledger and deck. Installing a residential deck where the floor for the house uses a MPCWT system must be in accordance with a standard detail provided by the truss designer, a corresponding detail in section 7 of Appendix C, or a full plan submission – unless the deck is free-standing as addressed in section 10.

Siding and flashing. Flashing must be installed in accordance with all of the following:

1. The exterior finish, such as house siding, must be removed in the area for the ledger board prior to the installation of the ledger board.
2. Continuous flashing with a drip edge, as shown in Figure 11, is required at a ledger board that is attached to wood-framed construction. Caulking is needed with the flashing at a threshold to prevent water intrusion due to splash from the deck or due to melting snow and ice.
3. Flashing must be a corrosion-resistant metal having a minimum nominal 0.019-inch thickness – such as galvanized steel coated with 1.85 ounces of zinc per square foot (G-185 coating), copper (attached using copper nails only), or stainless steel – or must be a UV-resistant plastic recommended by its manufacturer for this use. Do not use aluminum in direct contact with lumber treated with preservatives that contain copper, such as ACQ, copper azole, or ACZA.

Figure 11
ATTACHMENT OF LEDGER BOARD TO BAND BOARD OR BAND JOIST

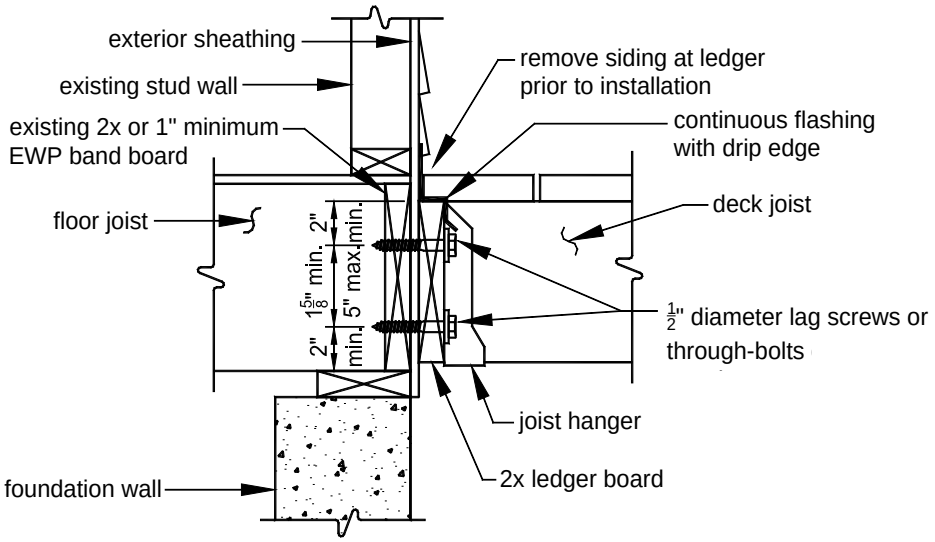

Figure 12
ATTACHMENT OF LEDGER BOARD TO SOLID FOUNDATION

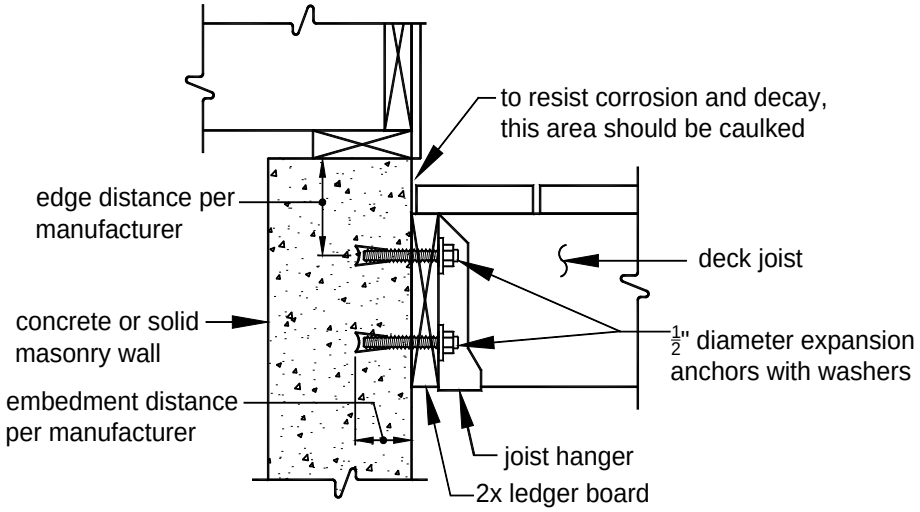

Figure 13
ATTACHMENT OF LEDGER BOARD TO HOLLOW FOUNDATION

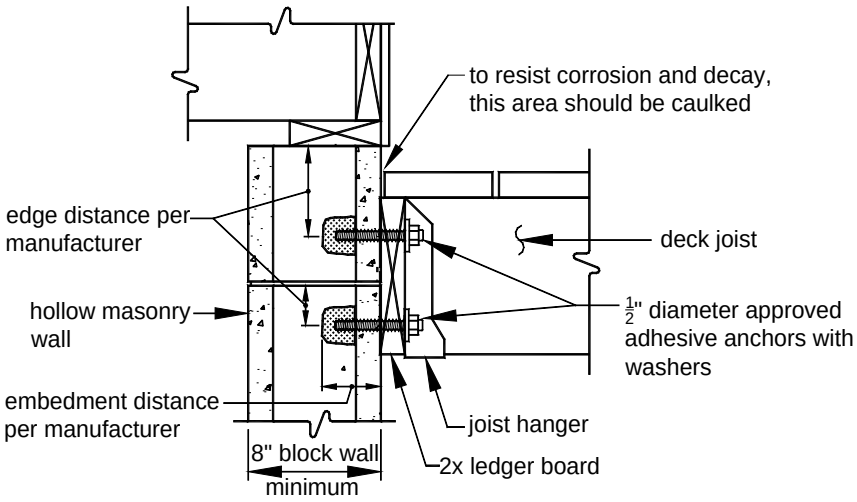

Prohibited ledger attachments. Attaching a ledger board to or through an exterior veneer such as brick or stone, or to or through a masonry chimney, or to a house overhang – as shown below – are prohibited. In such cases, the deck must be free-standing, as addressed in section 10. Attaching a ledger board to a house overhang is allowed if supported by engineering.

Figure 14
PROHIBITED LEDGER ATTACHMENTS

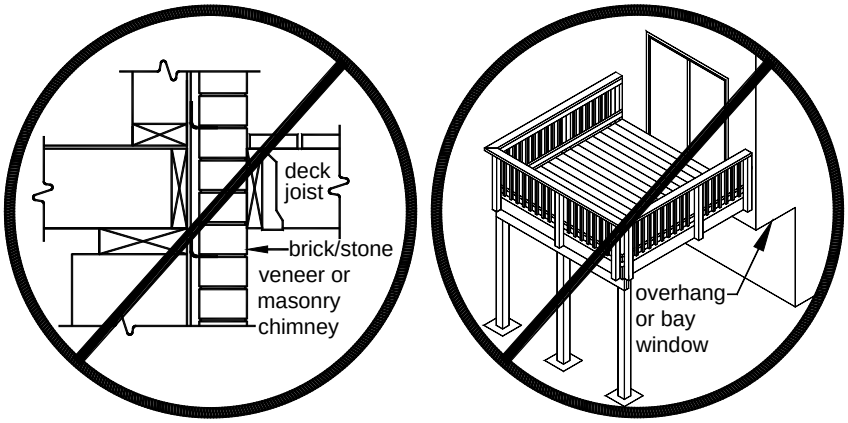

SECTION 9: LEDGER-BOARD FASTENERS

General requirements. Ledger board fasteners must be installed in accordance with this section. Placement and spacing must be in accordance with Figure 15 and Table 6. Only the fastener types listed here are approved for use; lead anchors are prohibited. Adequacy of connections may be verified by local inspectors.

Figure 15
LEDGER BOARD FASTENER SPACING AND CLEARANCES

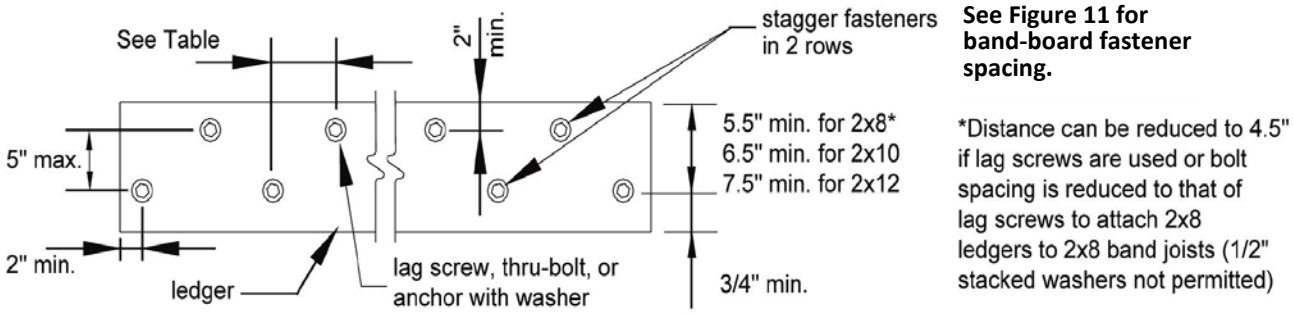

Table 6
LEDGER BOARD FASTENER SPACING, ON CENTER[1,2,3]

Fastener	Band Board	Joist Span: less than or equal to						
		6'	8'	10'	12'	14'	16'	18'
Lag screws	1" EWP	24"	18"	14"	12"	10"	9"	8"
	$1^1/_8$" EWP	28"	21"	16"	14"	12"	10"	9"
	2x Lumber	30"	23"	18"	15"	13"	11"	10"
Through-Bolts	1" EWP	24"	18"	14"	12"	10"	9"	8"
	$1^1/_8$" EWP	28"	21"	16"	14"	12"	10"	9"
	2x Lumber	36"	36"	34"	29"	24"	21"	19"
Through-Bolts with ½" stacked washers[4,5]	2x Lumber	36"	36"	29"	24"	21"	18"	16"
Adhesive anchors	——	32"	32"	32"	24"	24"	16"	16"

[1]These values are valid for deck ledgers consisting of douglas fir/larch, hem/fir, or southern pine; and for band boards consisting of douglas fir-larch, hem-fir, spruce-pine-fir, southern pine, or engineered wood product (EWP).

[2]Where solid-sawn pressure-preservative-treated deck ledgers are attached to engineered wood products (minimum 1" thick wood structural panel band joist or structural composite lumber including laminated veneer lumber), the ledger attachment must be designed in accordance with accepted engineering practice. These tabulated values are in accordance with that practice and are based on 300 lbs and 350 lbs for 1" and $1^1/_8$" EWP rim board, respectively.

[3] The thickness of the sheathing over the band board must not exceed $^{15}/_{32}$".

[4] The maximum gap between the face of the ledger board and face of the wall sheathing is ½".

[5] Wood structural panel sheathing, gypsum board sheathing, or foam sheathing is permitted between the ledger board and the band board. Stacked washers are permitted in combination with wood structural panel sheathing, but are not permitted in combination with gypsum board or foam sheathing. The maximum distance between the face of the ledger board and the face of the band board is 1".

Through-bolts. Through-bolts must have a diameter of ½ inch. Pilot holes for through-bolts must be $^{17}/_{32}$ to $^9/_{16}$ inches in diameter. Through-bolts must be equipped with washers at the bolt head and nut. Bolts should be tightened 6 to 12 months after construction due to drying and wood shrinkage.

Expansion anchors. Expansion or adhesive anchors must be used for attaching a ledger board to a concrete or solid masonry wall, as shown in Figure 12. The bolt or threaded rod of expansion anchors must have a diameter of ½ inch, which in some cases may result in needing a $^5/_8$-inch-diameter anchor. Expansion anchors must be installed in accordance with the manufacturer's instructions and must be equipped with washers.

Adhesive anchors. Approved adhesive anchors with a ½-inch-diameter threaded rod must be used for attaching a ledger board to hollow masonry, as shown in Figure 13. Examples of approved adhesive anchors include the Epcon Acrylic 7 by ITW Ramset/Red Head, and the HY-20 by Hilti. Adhesive anchors are also permitted with concrete or solid masonry installations. Adhesive anchors must be installed in accordance with the manufacturer's instructions and must be equipped with washers. Adhesive cartridges should remain on the jobsite for inspector verification.

Lag screws. The diameter, length, and shank of lag screws must comply with Figure 16. Lag screws must be equipped with washers and be installed in the following sequence:

1. Drill a ½-inch-diameter hole in the ledger board and a $^{5}/_{16}$-inch-diameter pilot hole into the solid-connection material of the existing house.
2. Insert the lag screw through the ledger board and into the pilot hole by turning. Do not drive with a hammer. Use soap or a wood-compatible lubricant if needed to facilitate tightening.
3. Tighten each lag screw snugly, but do not over-tighten so as to cause wood damage.

Figure 16
LAG SCREW

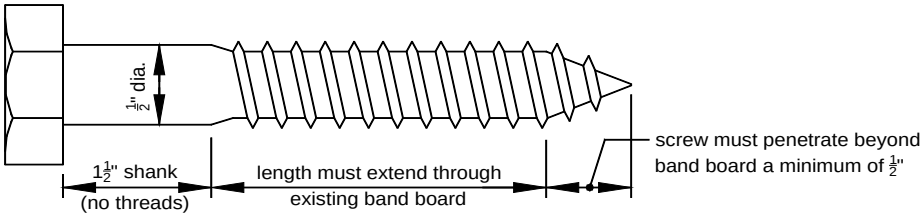

SECTION 10: FREE-STANDING DECKS

A deck that is free-standing does not utilize the exterior wall of the existing house to support vertical loads. Instead, an additional beam is provided at or offset from the existing house wall, as shown in Figure 17. If the edge of a deck footing is closer than 5 feet to an existing exterior house wall, the footing must bear at the same elevation as the existing wall footing as shown in Figure 17. For a house with a basement, a cylindrical footing (caisson) is recommended to minimize required excavation at the basement wall.

Figure 17
FREE-STANDING DECK

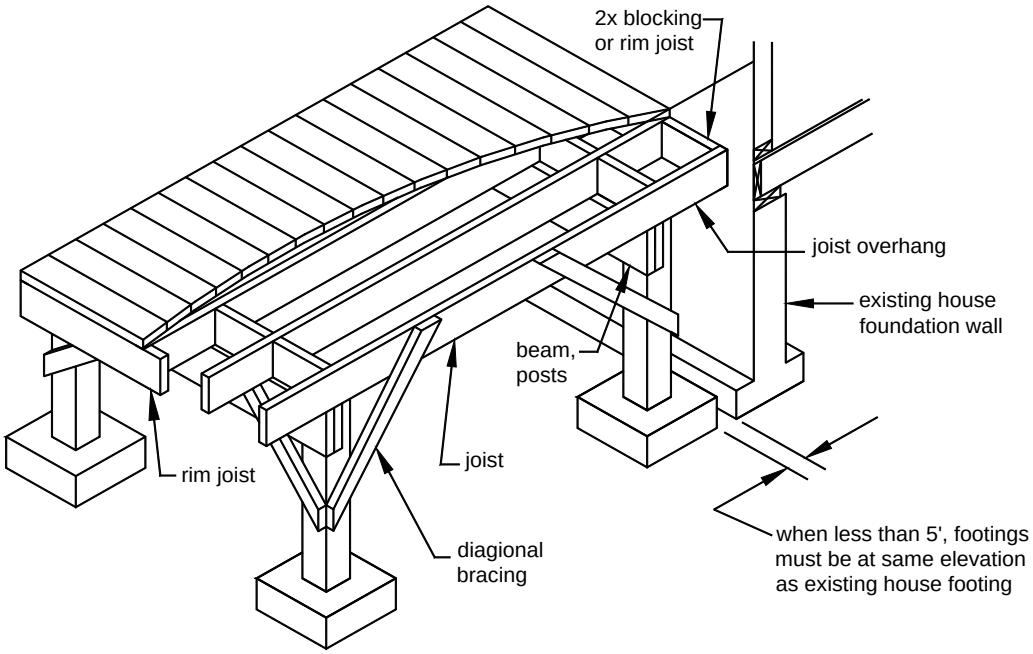

SECTION 11: LATERAL SUPPORT

A deck that is more than 24 inches above grade must resist lateral loads in accordance with the following:

Diagonal Bracing. Provide diagonal bracing both parallel and perpendicular to the beam at each post as shown in Figure 18. Where parallel to the beam, the bracing must be bolted to the post at one end and to the beam at the other. Where perpendicular to the beam, the bracing must be bolted to the post at one end and to a joist or blocking between joists at the other. Where a joist does not align with the bracing location, provide blocking between the adjacent joists. **Exceptions:** Bracing is not required perpendicular to the house for a deck that is attached to the house with both a ledger board under sections 8 and 9 and the connection specified in either Figure 19 or 20. For a free-standing deck that is attached to the house as specified in Figure 21, bracing parallel to the house may be omitted at the beam adjacent to the house. All bracing may be omitted for a deck which is attached to the house in accordance with sections 8 and 9 or Figure 21 and which has all of its decking installed at a 45 degree angle to the deck joists.

Figure 18
DIAGONAL BRACING REQUIREMENTS

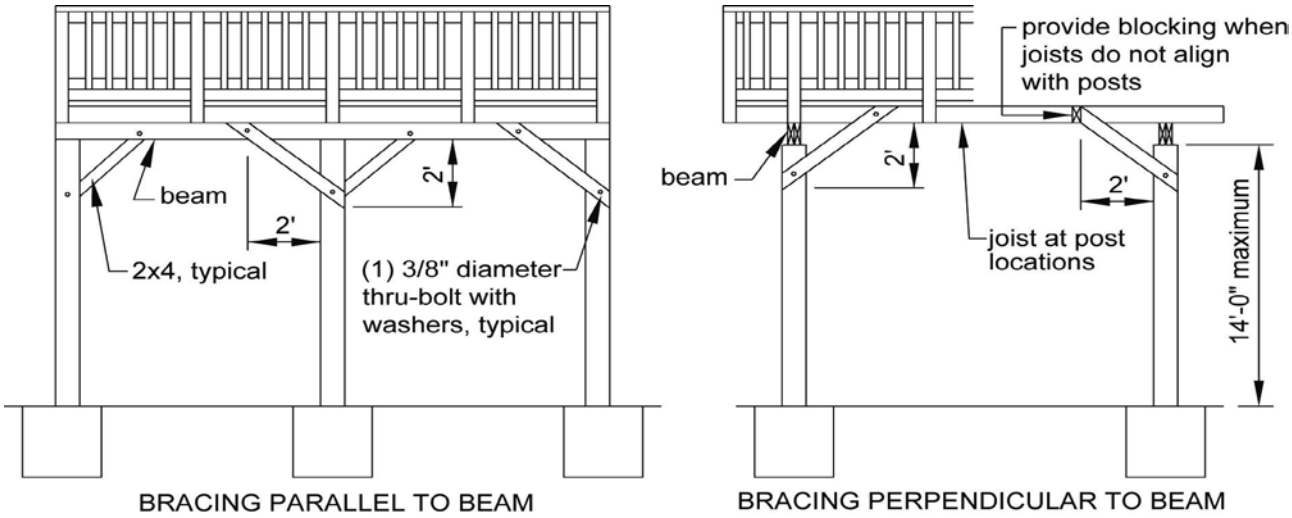

Figure 19
TENSION-TIE CONNECTION, WITH LEDGER BOARD

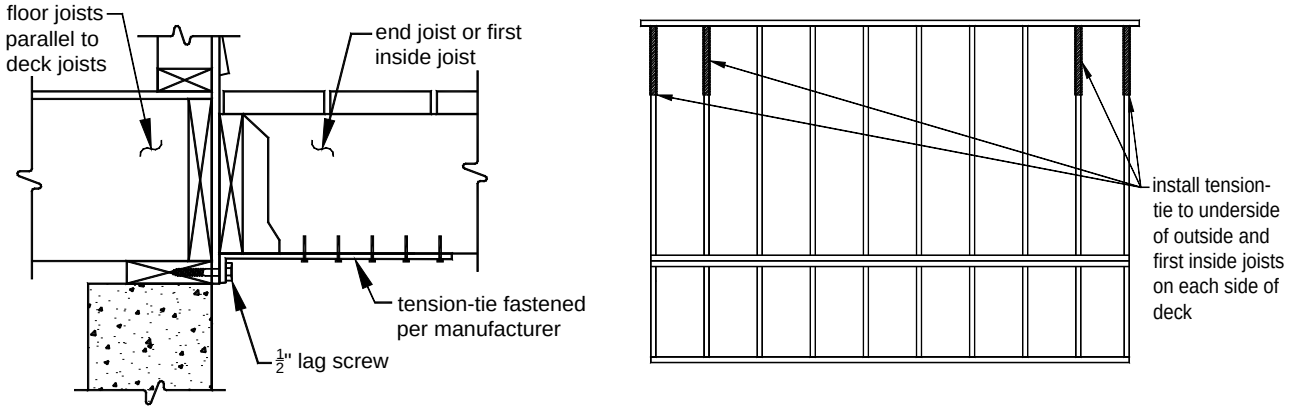

Tension-tie requirements. Tension ties, if used instead of perpendicular bracing as described above, must comply with all of the following, but are not permitted for free-standing decks:

1. The deck joists and floor joists must be parallel.
2. At least 4 ties must be installed, at the end joist and first inside joist at each end of the deck as shown in Figure 19. A set of tension-ties must be installed for each structurally independent section of a multi-level deck.
3. Approved tension-ties include the LTS19 from USP or DTT1Z from Simpson Strong-Tie.
4. The minimum capacity of each tension-tie is 750 pounds.
5. Tension ties which are not available in a G-185 zinc coating, therefore a barrier membrane must separate the tension tie and the preservative-treated joist. The barrier membrane must be recommended for this location by its manufacturer.
6. Tension-ties must be attached to the underside of the joists in accordance with the manufacturer's instructions. Tension-ties must be attached to the exterior wall with lag screws as shown in Figure 19. Lag screws must penetrate a minimum of 3 inches into the sill plate or top plate of a wood-framed wall.

7. Where attaching to a concrete wall, lags screws may be replaced with adhesive or expansion anchors and a ½-inch threaded rod, with a withdrawal capacity of at least 750 pounds. The anchor must be installed in accordance with the manufacturer's instructions.

Figure 20
HOLD-DOWN TENSION DEVICE, WITH LEDGER BOARD

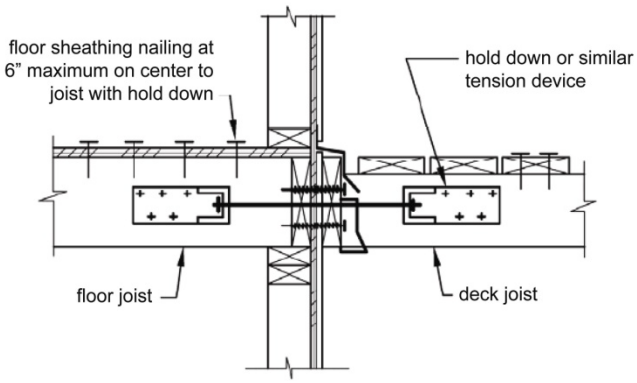

Hold-down tension devices. Hold-down tension devices, if used instead of perpendicular bracing as described above, must be provided in at least two locations per deck, and each device must have an allowable-stress-design capacity of at least 1,500 pounds.

Free-standing deck – attachment to house. Attach the deck's rim joist to the existing house exterior wall as shown in Figure 21 for a free-standing deck, if diagonal bracing parallel to the house is omitted, as described above. The wall must be sheathed with minimum $^{3}/_{8}$-inch wood structural panel sheathing. Use lag screws or through-bolts if fastening to an existing band joist or wall stud; and use expansion or adhesive anchors if fastening to concrete or masonry. Do not attach to brick veneers. Verify this condition in the field prior to utilizing this method. Fasteners must be 16 inches on center and staggered in 2 rows. Flashing over the rim joist is required and must be installed in accordance with the flashing provisions in section 8.

Figure 21
ATTACHMENT OF FREE-STANDING DECK TO HOUSE FOR LATERAL SUPPORT

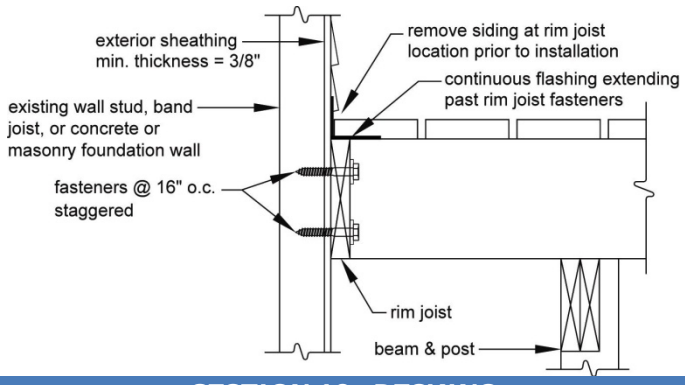

SECTION 12: DECKING

All decking materials must be wood or a wood-plastic composite and must comply with all of the following:

1. Wood decking must be 2x4s, 2x6s, or five-quarter span-rated decking boards. Wood-plastic-composite sizes must be in accordance with the manufacturer's instructions. Plastic

decking may be used if it is approved by a professional testing organization for supporting a live load of 40 psf and is installed according to the manufacturer's instructions.

2. Decking must be attached in accordance with Figure 22, and may be placed at an angle of 45 to 90 degrees to the joists unless disallowed in the manufacturer's instructions. If the decking is wet, place it with no gap so that after drying, a ⅛-inch gap is created.
3. Decking may overhang a joist by up to 3 inches unless disallowed in the manufacturer's instructions.
4. The center-to-center joist spacing may be up to 24 inches for wood decking, but may not exceed 16 inches for wood-plastic-composite decking unless specified otherwise by the manufacturer.
5. Each wood decking member must bear on a minimum of 4 joists or intermediate blocking between joists.
6. Placement and attachment of wood-plastic composites must be in accordance with the manufacturer's instructions.
7. Attach the decking to the rim joist in accordance with Figure 23.

Figure 22
TYPICAL DECKING

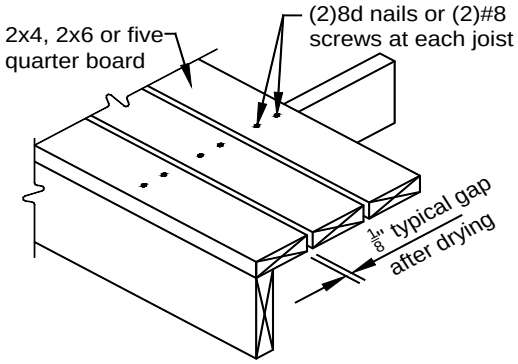

Figure 23
RIM JOIST CONNECTION

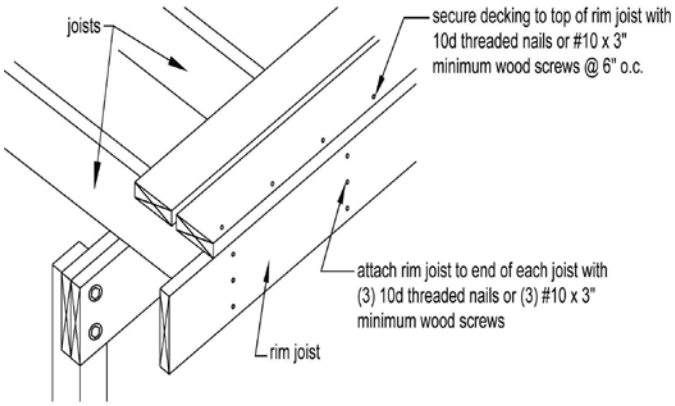

SECTION 13: GUARD AND POSTS

All open sides of a deck area that is more than 24 inches above grade – at any point within 36 inches beyond the edge of the deck – must have a guard that complies with Figure 24 and with all of the following:

1. Required horizontal guards shall not have openings from the walking surface to the required guard height which allow passage of a sphere 4 inches in diameter, when applying a force of 4 pounds.
2. Required guards at stairs shall not have openings which allow passage of a sphere $4^3/_8$ inches in diameter, when applying a force of 4 pounds, other than the triangular opening at the side of an open stair formed by the riser, tread, and bottom rail of a guard, which shall not allow passage of a 6" sphere, when applying a force of 4 pounds.
3. Wet lumber must be spaced such that when shrinkage due to drying occurs, a compliant opening is maintained.
4. Rope, cable, or a similar non-rigid material may be used instead of balusters if it is strung with maximum openings of 3½ inches and with vertical supports no more than 4 feet apart.
5. The guard and posts must withstand a 200-pound load applied in any direction.
6. Guard-infill components, such as balusters and panel fillers, must withstand a horizontally applied, perpendicular load of 50 pounds on any one-foot-square area.

7. Wood-plastic composites of equivalent dimensions may be substituted for the guard cap and infill elements shown in Figure 24 if the manufacturer's instructions permit this use.

Figure 24
GUARDS

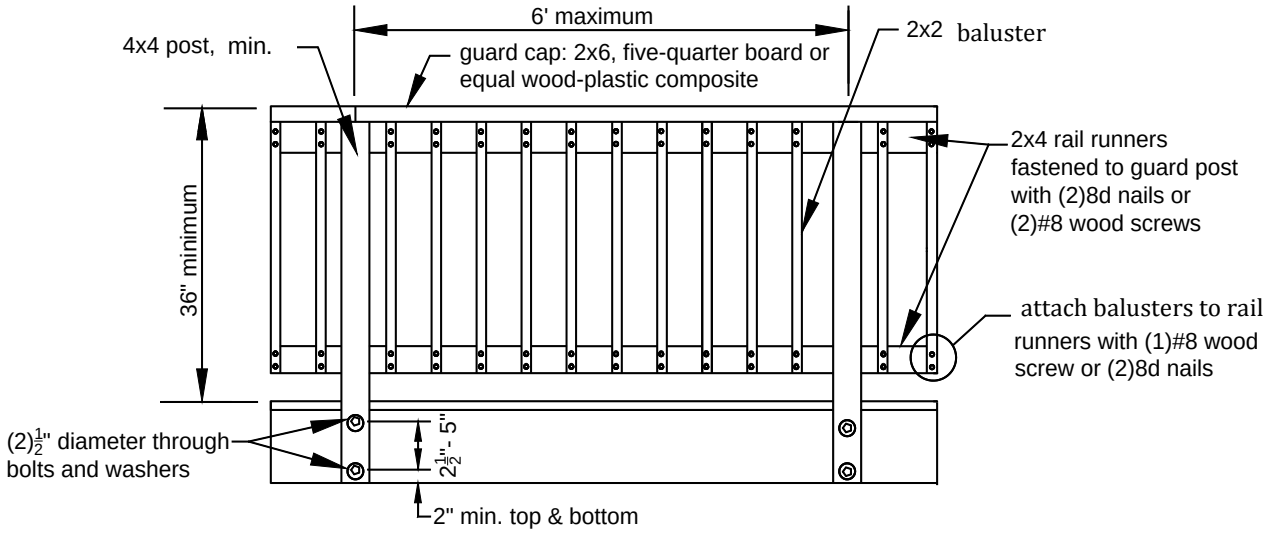

Guard posts. Guard posts must be attached to the deck structure in accordance with all of the following:

1. Notching guard posts, as shown in Figure 25, is prohibited.
2. Hold-down anchors, as shown in Figures 26 and 27, must be used to attach the guard post to the end joist and rim joist, respectively.
3. Hold-down anchors must have a minimum capacity of 1,800 pounds.
4. Guard posts may be attached to either side of the end joist or rim joist.
5. Bolt holes for a post must be at least 2 inches from the wood edge, at least 2½ inches apart, and no more than 5 inches apart.

Figure 25
POST NOTCHING PROHIBITED

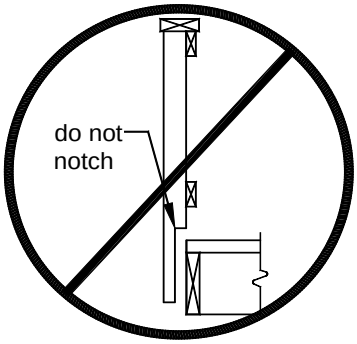

Figure 26
GUARD POST TO END JOIST

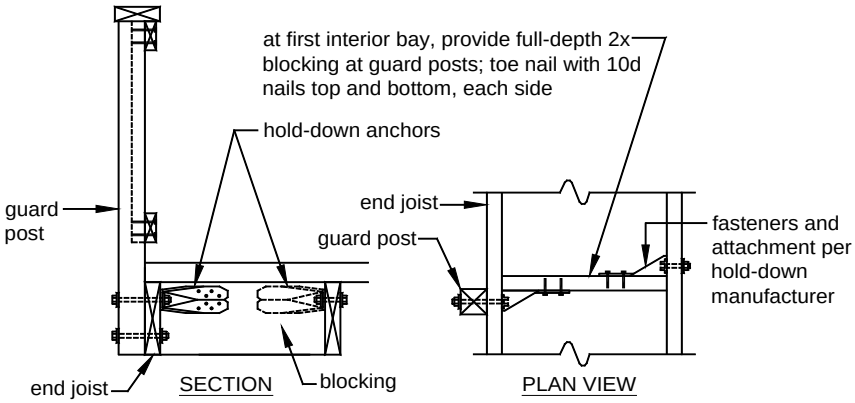

Figure 26
GUARD POST TO RIM JOIST

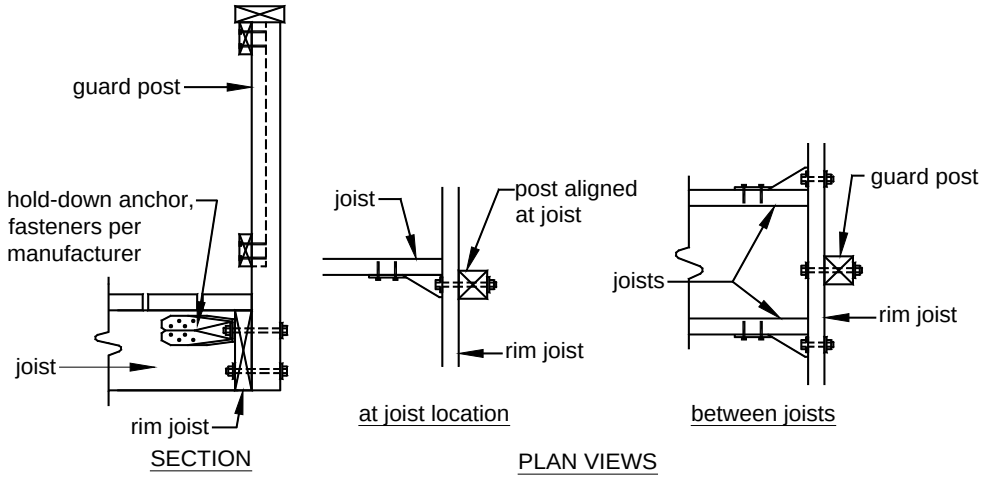

SECTION 14: STAIRS

Stair dimensions. Stair dimensions must comply with all of the following:

1. The minimum width of a stairway is 36 inches.
2. Handrails and associated trim may project a maximum of 4½ inches into the required width at each side of the stairway. The minimum clear width at and below the handrail, including at treads and landings, cannot be less than 31½ inches where a handrail is installed on one side, and 27 inches where handrails are provided on both sides.
3. Stair geometry and openings must be as shown in Figure 27.

Figure 27
TREADS AND RISERS

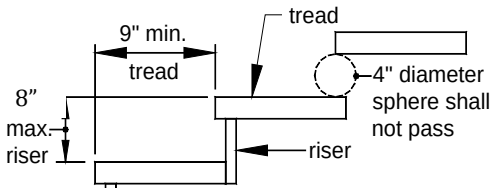

4. Within a stairway flight, the largest tread depth may not exceed the smallest tread depth by more than $^{3}/_{8}$ inch, and the largest riser height may not exceed the smallest riser height by more than $^{3}/_{8}$ inch.
5. If the total vertical height of a stairway exceeds 12 feet, an intermediate landing is required and must be constructed as a free-standing deck with flush beams, and with posts as shown in Figure 29.
6. Any landing width must equal or exceed the total width of the stairway it serves.

Stair stringers. Stringers must comply with all of the following:

1. Stringers must be sawn or solid 2x12s complying with the above tread and riser dimensions.
2. Stringers must be spaced no more than 18 inches on center.
3. Stringers must bear on footings and attach to the deck or a landing in accordance with Figure 28, except the footings must comply with Figure 29 if the vertical drop of the stairway is more than 24 inches. The depth to below frost must not be less than 48 inches.
4. Stringer-span length is measured using the horizontally projected distance between the centerlines of bearing at each end.
5. The span length of a stringer must not exceed 6 feet-0 inches, and the throat size of cut stringers must not be less than 5 inches, as shown in Figure 30.

Solid-stringer exception: Stringers for a stairway that has a width of 36 inches may have a horizontally projected span of up to 13 feet 3 inches if the stairway is framed solely with 2 solid stringers.

Intermediate-supported stringers: If the total stringer length exceeds the above dimensions, a 4x4 post may be provided to support the stringer and shorten its span length. The 4x4 post must be notched and bolted to the stringer in accordance with Figure 2. The post must bear over the middle one-third of a footing that is constructed in accordance with Figure 29 and is attached to the post as shown in Figure 2. An intermediate landing as described above may also be provided to shorten the stringer span.

Figure 28
STRINGER BEARING

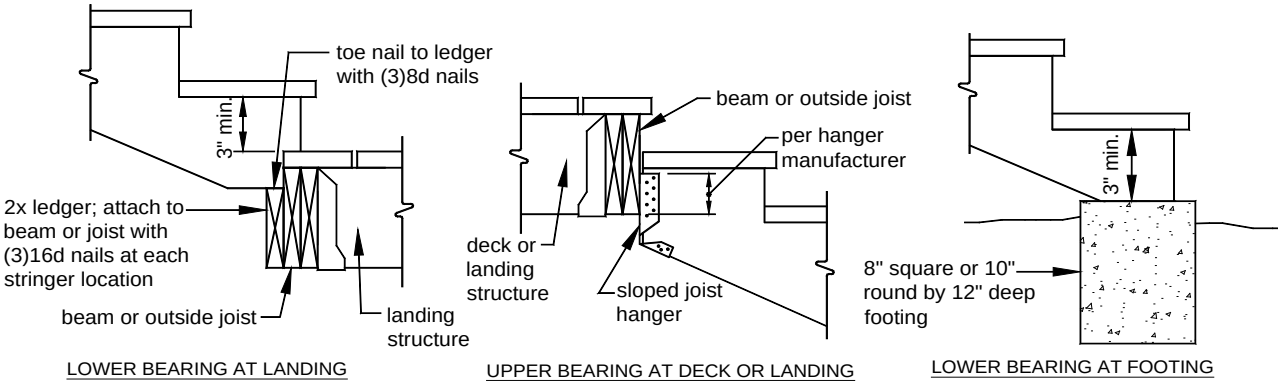

Figure 29
STAIR OR POST FOOTING

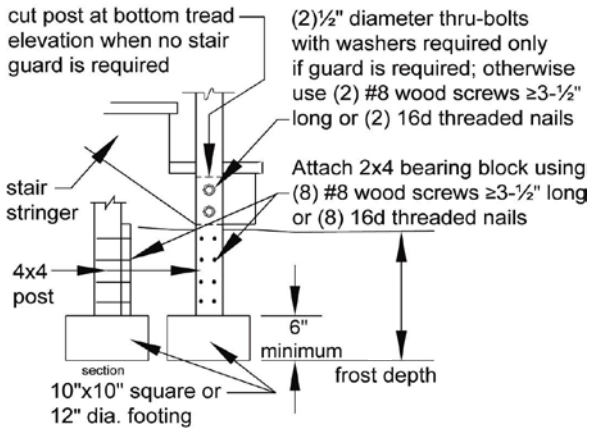

Figure 30
STRINGER SPAN LENGTH

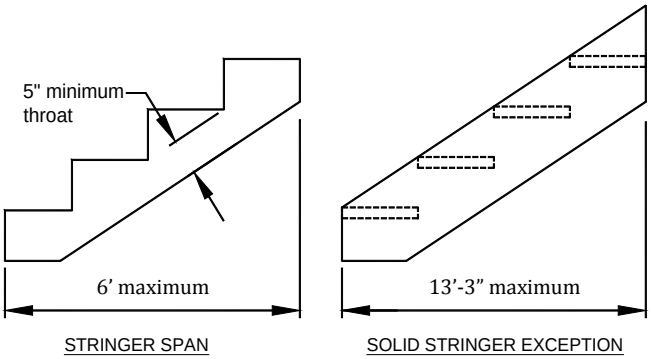

Tread and riser material. Treads and risers must comply with all of the following:

1. Tread material must be equivalent to the decking specified in section 12 and be attached in accordance with Figure 31, except wood-plastic composites must be attached in accordance with the manufacturer's instructions.
2. Stairs constructed using the solid-stringer exception noted above must have treads constructed of 2x wood material only and be attached in accordance with Figure 31.
3. Risers that are not open (as shown in Figure 27) must be framed with 1x lumber minimum or an manufacturer recommended wood-plastic composite.

Figure 31
STAIRWAY TREADS

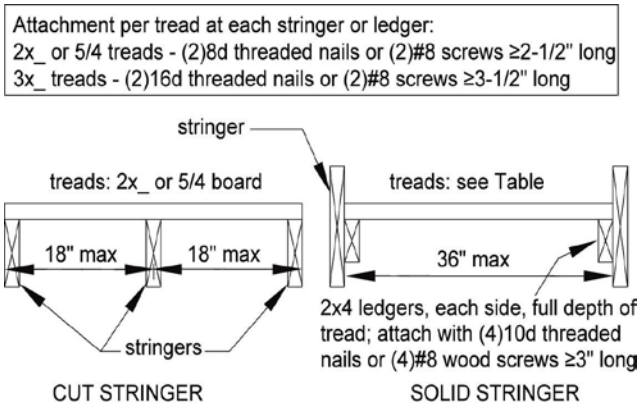

Table 7
MINIMUM TREAD SIZES[1]

Species	Cut Stringer	Solid Stringer
Douglas Fir/Larch, Hem/Fir, SPF[2]	2x4 or 5/4	2x8 or 3x4
Southern Pine	2x4 or 5/4	2x8
Redwood, Western Cedars, Ponderosa Pine[3], Red Pine[3]	2x4 or 5/4	2x10 or 3x4

[1] Assumes 300 lb concentrated load, L/288 deflection limit, No. 2 grade, and wet service conditions.
[2] Incising assumed for refractory species including Douglas fir-larch, hem-fir, and spruce-pine-fir.
[3] Design values based on northern species with no incising assumed.

Stair guards. Guards must be provided on all open sides of stairs consisting of more than 3 risers. Stair guards must comply with section 13 and Figure 32.

Figure 32
STAIR GUARDS

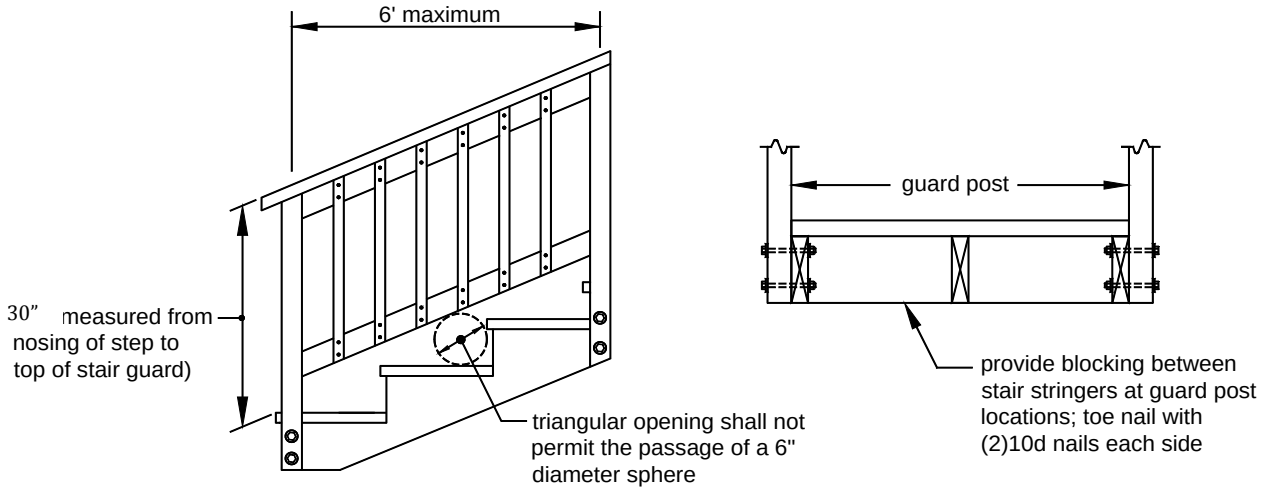

Stair handrails. A flight of stairs with more than 3 risers must have at least one handrail that complies with all of the following:

1. The handrail must be located at least 30 inches, but no more than 38 inches above the nosing of the treads – except that a volute, turnout, starting easing, or transition fitting may depart from these dimensions. Measurement must be taken from the nosing to the top of the rail.
2. The handrail must be attached to a stair guard or exterior wall acting as a barrier as shown in Figure 33.

3. The handrail and connecting hardware must be decay- and corrosion-resistant.
4. The handrail must have a smooth surface with no sharp corners and must be graspable, as shown in Figure 34. Recessed sections may be shaped from a 2x6 or five-quarter board, as shown there.
5. Handrails must run continuously from a point directly over the lowest riser to a point directly over the highest riser.
6. Handrails may be interrupted by guard posts at a turn in the stair only.

Figure 33
STAIR HANDRAILS

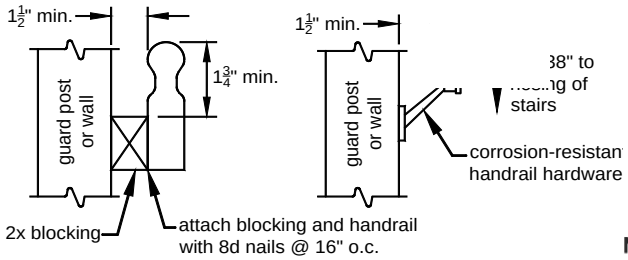

Figure 34
HANDRAIL GRASPABILITY

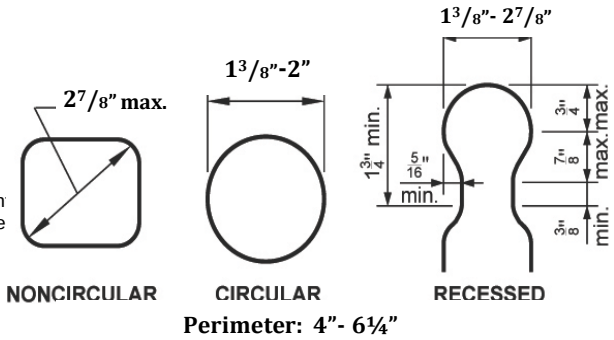

SECTION 15: FRAMING PLAN

A typical framing plan shows a bird's-eye or plan view of the joist and beam layout; the location of the ledger board, diagonal bracing or hold-down devices, posts, and footings; and the type, size, and spacing of the ledger board fasteners. You can use the sample typical deck framing plan shown on the next page in combination with the requirements in this document to complete your deck.

Figure 36
TYPICAL DECK FRAMING PLAN

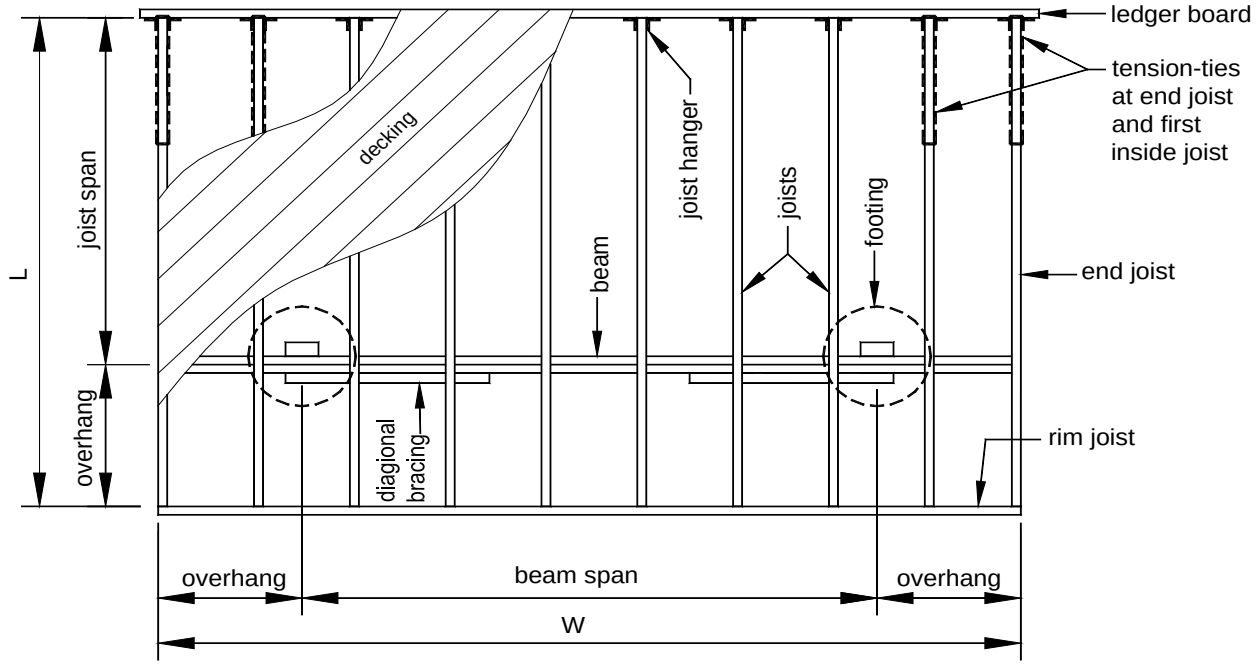

Decking: ☐ 2x4 ☐ 2x6 ☐ five-quarter board ☐ wood-plastic composite (per ASTM D 7032)
☐ Other decking, evaluation report number:_____

Joists: size: ☐ 2x6 ☐ 2x8 ☐ 2x10 ☐ 2x12 spacing: ☐ 12 in. ☐ 16 in. ☐ 24 in.
joist span dimension: _____ft. - _____in.
overhang: ☐ Yes ☐ No overhang dimension: _____ft. - _____in.
rim joist: ☐ 2x6 ☐ 2x8 ☐ 2x10 ☐ 2x12

Beam(s): number of plies: ☐ 2 ☐ 3 size: ☐ 2x6 ☐ 2x8 ☐ 2x10 ☐ 2x12
overhang: ☐ Yes ☐ No overhang dimension: _____ft. - _____in.

Posts: size: ☐ 4x4 ☐ 4x6 ☐ 6x6 height: _____ft. - _____in.

Footings: size:_____in. ☐ square ☐ round thickness: _____in.

Ledger: ledger board size: ☐ 2x8 ☐ 2x10 ☐ 2x12 ☐ Not applicable (free-standing deck)
fastener: ☐ Through bolt ☐ Lag screw ☐ Wood screw
☐ Expansion anchor ☐ Adhesive anchor

Lateral support: ☐ Tension-tie ☐ Diagonal bracing, size: ☐ 2x
(not permitted for free-standing deck)

Deck size: L=_____ft. - _____in. W=_____ft. - _____in.

SECTION 8. Chapters SPS 320 to 325 Appendix C is created to read:

Chapters SPS 320 – 325 Appendix C
Supplemental Deck Features and Reference Information

CONTENTS

1. Wood preservatives for ground contact.
2. Specifications for fasteners.
3. Sources of design values.
4. Joist spans for alternate wood species.
5. Framing around a chimney or bay window.
6. Attachment of ledger boards to metal-plate-connected wood floor trusses.

1. Wood preservatives for ground contact. The following Table lists common pressure-preservative treatments and retention levels, in pounds per cubic foot, for sawn lumber in ground contact – based on the American Wood Protection Association's *Book of Standards*.

Table C–1
PRESERVATIVE TREATMENTS AND RETENTION LEVELS FOR GROUND CONTACT (IN POUNDS PER CUBIC FOOT)

Species	ACQ-B	ACQ-C	ACQ-D	CA-B	CuN-W
Southern Pine	0.40	0.40	0.40	0.21	0.11
Douglas Fir-Larch	0.40	0.40	NR	0.21	0.11
Hem-Fir	0.40	0.40	0.40	0.21	0.11
Ponderosa Pine	0.40	0.40	0.40	0.21	0.11
Red Pine	0.40	0.40	0.40	0.21	0.11
Spruce-Pine-Fir	NR[1]	0.40	NR	NR	NR
Redwood	NR	NR	NR	NR	NR

[1]NR = treatment not recommended.

2. Sources of design values. The sources of the design values in Appendix B are as follows:

- Table 1 – Minimum footing sizes: The Building Inspectors Association of Southeast Wisconsin, December 2014.
- Table 2 – Maximum post heights: *Typical Deck Details, Based on the 2009 International Residential Code,* Fairfax County, Virginia, July 2013.
- Tables 3A and 3B – Maximum beam spans: *Design for Code Acceptance 6,* American Wood Council, May 2013.
- Table 4 – Maximum joist spans: *Design for Code Acceptance 6* (DCA 6), American Wood Council, May 2013; except for the 2x6 values, which are from the Building Inspectors Association of Southeast Wisconsin, December 2014.
- Table 5 – Minimum joist-hanger download capacity: *Design for Code Acceptance 6,* American Wood Council, May 2013; except for the 2x6 values, which are repeated from the 2x8 values.
- Table 6 – Ledger-board-fastener spacing: *Design for Code Acceptance 6,* American Wood Council, May 2013.

- Figure 30 – Stringer span length, and Table 7 – Minimum tread sizes: *Design for Code Acceptance 6,* American Wood Council, May 2013.
- Table C–2 – Maximum joist spans for redwood, western cedars, ponderosa pine, and red pine: *Design for Code Acceptance 6,* American Wood Council, May 2013; except for the 2x6 values, which are from the Building Inspectors Association of Southeast Wisconsin, December 2014.
- Table C–3 – Trimmer joist download capacity: *Design for Code Acceptance 6,* American Wood Council, May 2013.

3. Joist spans for alternate wood species. The following Table lists maximum joist-span lengths for redwood, western cedars, ponderosa pine, and red pine.

Table C–2
MAXIMUM JOIST-SPAN LENGTH[1] FOR REDWOOD, WESTERN CEDARS, PONDEROSA PINE[2], AND RED PINE[2]

Joist Spacing (on center)	Joist Size	Without Overhang	With Overhangs
12"	2x6	8'-5"	7'-3"
	2x8	11'-8"	8'-6"
	2x10	14'-11"	12'-3"
	2x12	17'-5"	16'-5"
16"	2x6	7'-8"	7'-3"
	2x8	10'-7"	8'-6"
	2x10	13'-0"	12'-3"
	2x12	15'-1"	15'-1"
24"	2x6	6'-7"	6'-7"
	2x8	8'-8"	8'-6"
	2x10	10'-7"	10'-7"
	2x12	12'-4"	12'-4"

[1]Spans are based on 40 psf live load, 10 psf dead load, normal loading duration, wet service conditions and deflections of Δ=L/360 for main span and L/180 for overhang with a 220-lb. point load.

[2]Design values based on northern species with no incising assumed.

4. Alternate beam and joist spans. The table on the following two pages lists alternate beam and joist spans and corresponding footing sizes from the Southeast Wisconsin Building Inspectors Association that can be used instead of the values in Appendix B.

Beam and Footing Sizes with Overhangs

Based on No. 2 or better Southern Pine, Douglas Fir-Larch[2], and Ponderosa Pine

Joist Length (JL)[1]		Post Spacing (Measured Center to Center)																																				
		4'			5'			6'			7'			8'			9'			10'			11'			12'			13'			14'					
6'	Southern Pine Beam	1-2x6			1-2x6			1-2x8			2-2x6			2-2x8			2-2x8			2-2x10			2-2x10			2-2x12			3-2x10			3-2x12					
	Douglas Fir-Larch Beam	1-2x6			1-2x8			1-2x8			2-2x8			2-2x8			2-2x10			2-2x10			2-2x12			2-2x12			3-2x10			3-2x12					
	Ponderosa Pine Beam	1-2x6			1-2x8			1-2x8			2-2x8			2-2x8			2-2x10			2-2x10			2-2x12			2-2x12			3-2x10			3-2x12					
	Corner Footing	8	7	6	9	8	7	10	8	7	11	9	8	11	9	8	12	10	9	12	10	9	13	11	9	14	11	10	14	12	10	15	12	10			
	Intermediate Footing	10	8	7	11	9	8	12	10	9	13	11	9	14	12	10	15	12	11	15	13	11	16	13	12	17	14	12	17	14	13	18	15	13			
	Footing Thickness	6			6			6			6			6			6			6			6			6			6			8					
7'	Southern Pine Beam	1-2x6			1-2x8			1-2x8			2-2x8			2-2x8			2-2x10			2-2x10			2-2x12			2-2x12			3-2x12			3-2x12					
	Douglas Fir-Larch Beam	1-2x6			1-2x8			2-2x6			2-2x8			2-2x8			2-2x10			2-2x10			2-2x12			3-2x10			3-2x12			3-2x12					
	Ponderosa Pine Beam	1-2x6			1-2x8			2-2x6			2-2x8			2-2x8			2-2x10			2-2x12			2-2x12			3-2x10			3-2x12			Eng Bm					
	Corner Footing	9	7	7	10	8	7	11	9	8	11	9	8	12	10	9	13	11	9	13	11	10	14	12	10	15	12	10	15	12	11	16	13	11			
	Intermediate Footing	11	9	8	12	10	9	13	11	9	14	12	10	15	12	11	16	13	11	17	14	12	17	14	12	18	15	13	19	15	13	19	16	14			
	Footing Thickness	6			6			6			6			6			6			6			6			8			8			8					
8'	Southern Pine Beam	1-2x6			1-2x8			2-2x6			2-2x8			2-2x8			2-2x10			2-2x12			2-2x12			3-2x12			3-2x12			Eng Bm					
	Douglas Fir-Larch Beam	1-2x6			1-2x8			2-2x8			2-2x8			2-2x10			2-2x10			2-2x12			2-2x12			3-2x12			3-2x12			Eng Bm					
	Ponderosa Pine Beam	1-2x6			1-2x8			2-2x8			2-2x8			2-2x10			2-2x10			2-2x12			3-2x10			3-2x12			3-2x12			Eng Bm					
	Corner Footing	10	8	7	10	9	8	11	9	8	12	10	9	13	11	9	14	11	10	14	12	10	15	12	11	15	13	11	16	13	12	17	14	12			
	Intermediate Footing	12	10	8	13	11	9	14	12	10	15	12	11	16	13	11	17	14	12	18	15	13	19	15	13	19	16	14	20	16	14	21	17	15			
	Footing Thickness	6			6			6			6			6			6			8			8			8			8			8					
9'	Southern Pine Beam	1-2x6			1-2x8			2-2x8			2-2x8			2-2x10			2-2x12			2-2x12			3-2x10			3-212			Eng Bm			Eng Bm					
	Douglas Fir-Larch Beam	1-2x8			1-2x8			2-2x8			2-2x8			2-2x10			2-2x12			2-2x12			3-2x12			3-2x12			Eng Bm			Eng Bm					
	Ponderosa Pine Beam	1-2x8			2-2x6			2-2x8			2-2x8			2-2x10			2-2x12			2-2x12			3-2x12			3-2x12			Eng Bm			Eng Bm					
	Corner Footing	10	8	7	11	9	8	12	10	9	13	11	9	14	11	9	14	12	10	15	12	11	16	13	11	16	13	12	17	14	12	18	14	13			
	Intermediate Footing	12	10	9	14	11	10	15	12	11	16	13	11	17	14	12	18	15	13	19	15	13	20	16	14	20	17	15	21	17	15	22	18	16			
	Footing Thickness	6			6			6			6			6			8			8			8			8			8			8					
10'	Southern Pine Beam	1-2x6			1-2x8			2-2x8			2-2x8			2-2x10			2-2x12			2-2x12			3-2x12			3-2x12			Eng Bm			Eng Bm					
	Douglas Fir-Larch Beam	1-2x8			2-2x6			2-2x8			2-2x10			2-2x10			2-2x12			3-2x10			3-2x12			3-2x12			Eng Bm			Eng Bm					
	Ponderosa Pine Beam	1-2x8			2-2x6			2-2x8			2-2x10			2-2x10			2-2x12			3-2x10			3-2x12			Eng Bm			Eng Bm			Eng Bm					
	Corner Footing	10	9	8	12	10	8	12	10	9	13	11	10	14	12	10	15	12	11	16	13	11	16	14	12	17	14	12	18	15	13	18	15	13			
	Intermediate Footing	13	11	9	14	12	10	15	13	11	17	14	12	18	15	13	19	15	13	20	16	14	21	17	15	21	18	15	22	18	16	23	19	16			
	Footing Thickness	6			6			6			6			8			8			8			8			8			8			10					
11'	Southern Pine Beam	1-2x8			2-2x6			2-2x8			2-2x10			2-2x10			2-2x12			3-2x12			3-2x12			Eng Bm			Eng Bm			Eng Bm					
	Douglas Fir-Larch Beam	1-2x8			2-2x8			2-2x8			2-2x10			2-2x10			2-2x12			3-2x12			3-2x12			Eng Bm			Eng Bm			Eng Bm					
	Ponderosa Pine Beam	1-2x8			2-2x6			2-2x8			2-2x10			2-2x12			2-2x12			3-2x12			3-2x12			Eng Bm			Eng Bm			Eng Bm					
	Corner Footing	11	9	8	12	10	9	13	11	9	14	12	10	15	12	11	16	13	11	16	14	12	17	14	12	18	15	13	19	15	13	19	16	14			
	Intermediate Footing	13	11	10	15	12	11	16	13	12	17	14	12	19	15	13	20	16	14	21	17	15	22	18	15	22	18	16	23	19	17	24	20	17			
	Footing Thickness	6			6			6			6			8			8			8			8			8			10			10					
12'	Southern Pine Beam	1-2x8			2-2x6			2-2x8			2-2x10			2-2x12			2-2x12			3-2x12			3-2x12			Eng Bm			Eng Bm			Eng Bm					
	Douglas Fir-Larch Beam	1-2x8			2-2x8			2-2x8			2-2x10			2-2x12			3-2x10			3-2x12			3-2x12			Eng Bm			Eng Bm			Eng Bm					
	Ponderosa Pine Beam	1-2x8			2-2x8			2-2x8			2-2x10			2-2x12			3-2x10			3-2x12			Eng Bm			Eng Bm			Eng Bm			Eng Bm					
	Corner Footing	11	9	8	12	10	9	14	11	9	15	12	10	15	13	11	16	13	12	17	14	12	18	15	13	19	15	13	19	16	14	20	17	14			
	Intermediate Footing	14	12	10	15	13	11	17	14	12	18	15	13	19	16	14	20	17	15	21	18	15	22	18	16	23	19	17	24	20	17	25	21	18			
	Footing Thickness	6			6			6			8			8			8			8			8			10			10			10					

Beam and Footing Sizes with Overhangs

Based on No. 2 or better Southern Pine, Douglas Fir-Larch[2], and Ponderosa Pine

Joist Length (JL)[1]		Post Spacing (Measured Center to Center) 4'	5'	6'	7'	8'	9'	10'	11'	12'	13'	14'
13'	Southern Pine Beam	1-2x8	2-2x8	2-2x8	2-2x10	2-2x12	3-2x10	3-2x12	Eng Bm	Eng Bm	Eng Bm	Eng Bm
13'	Douglas Fir-Larch Beam	1-2x8	2-2x8	2-2x10	2-2x10	2-2x12	3-2x10	3-2x12	Eng Bm	Eng Bm	Eng Bm	Eng Bm
13'	Ponderosa Pine Beam	1-2x8	2-2x8	2-2x10	2-2x10	2-2x12	3-2x12	3-2x12	Eng Bm	Eng Bm	Eng Bm	Eng Bm
13'	Corner Footing	12 10 8	13 11 9	14 12 10	15 12 11	16 13 12	17 14 12	18 15 13	19 15 13	19 16 14	20 17 14	21 17 15
13'	Intermediate Footing	14 12 10	16 13 12	17 14 13	19 15 13	20 16 14	21 17 15	22 18 16	23 19 17	24 20 17	25 21 18	26 21 19
13'	Footing Thickness	6	6	6	8	8	8	8	10	10	10	10
14'	Southern Pine Beam	1-2x8	2-2x8	2-2x8	2-2x10	2-2x12	3-2x12	3-2x12	Eng Bm	Eng Bm	Eng Bm	Eng Bm
14'	Douglas Fir-Larch Beam	1-2x8	2-2x8	2-2x10	2-2x10	2-2x12	3-2x12	3-2x12	Eng Bm	Eng Bm	Eng Bm	Eng Bm
14'	Ponderosa Pine Beam	1-2x8	2-2x8	2-2x10	2-2x12	2-2x12	3-2x12	Eng Bm	Eng Bm	Eng Bm	Eng Bm	Eng Bm
14'	Corner Footing	12 10 9	13 11 10	15 12 10	16 13 11	17 14 12	18 14 13	18 15 13	19 16 14	20 17 14	21 17 15	22 18 15
14'	Intermediate Footing	15 12 11	17 14 12	18 15 13	19 16 14	21 17 15	22 18 16	23 19 16	24 20 17	25 21 18	26 21 19	27 22 19
14'	Footing Thickness	6	6	8	8	8	8	10	10	10	10	10
15'	Southern Pine Beam	1-2x8	2-2x8	2-2x10	2-2x12	2-2x12	3-2x12	3-2x12	Eng Bm	Eng Bm	Eng Bm	Eng Bm
15'	Douglas Fir-Larch Beam	2-2x6	2-2x8	2-2x10	2-2x12	2-2x12	3-2x12	Eng Bm	Eng Bm	Eng Bm	Eng Bm	Eng Bm
15'	Ponderosa Pine Beam	2-2x6	2-2x8	2-2x10	2-2x12	3-2x10	3-2x12	Eng Bm	Eng Bm	Eng Bm	Eng Bm	Eng Bm
15'	Corner Footing	12 10 9	14 11 10	15 12 11	16 13 12	17 14 12	18 15 13	19 16 14	20 16 14	21 17 15	22 18 15	22 18 16
15'	Intermediate Footing	15 13 11	17 14 12	19 15 13	20 17 14	21 18 15	23 19 16	24 20 17	25 21 18	26 21 19	27 22 19	28 23 20
15'	Footing Thickness	6	6	8	8	8	10	10	10	10	10	12
16'	Southern Pine Beam	1-2x8	2-2x8	2-2x10	2-2x12	3-2x10	3-2x12	Eng Bm	Eng Bm	Eng Bm	Eng Bm	Eng Bm
16'	Douglas Fir-Larch Beam	2-2x6	2-2x8	2-2x10	2-2x12	3-2x10	3-2x12	Eng Bm	Eng Bm	Eng Bm	Eng Bm	Eng Bm
16'	Ponderosa Pine Beam	2-2x6	2-2x8	2-2x10	2-2x12	3-2x12	3-2x12	Eng Bm	Eng Bm	Eng Bm	Eng Bm	Eng Bm
16'	Corner Footing	13 11 9	14 12 10	15 13 11	17 14 12	18 15 13	19 15 13	20 16 14	20 17 15	21 18 15	22 18 16	23 19 16
16'	Intermediate Footing	16 13 11	18 15 13	19 16 14	21 17 15	22 18 16	23 19 17	25 20 18	26 21 18	27 22 19	28 23 20	29 24 21
16'	Footing Thickness	6	8	8	8	8	10	10	10	10	12	12

Notes:

1. Joist Length (J_L) is Joist Span (L_J) plus any cantilever at the beam that is being sized.
2. Incising assumed for refractory species Douglas Fir-Larch.
3. All footing sizes above are base diameters (in inches) and are listed for THREE SOIL CAPACITIES. Soil capacity is based on the requirements of State of Wisconsin SPS 321.15 (3).[4]
4. For square footings, insert the diameter (d) into the following formula: $\sqrt{((d/2)^2 \times \pi)}$. This number will give you the square dimension and shall be rounded up to the nearest inch.

	2000 psf Soil[3]	3000 psf Soil[3]	4000 psf Soil[3]
Corner Footing	0	0	0
Intermediate Footing	0	0	0

5. Framing around a chimney or bay window. All members at a chimney or bay window must be framed in accordance with Figure C–1. Headers may span a maximum of 6'-0". Where a chimney or bay window is wider than 6'-0", one or more 6x6 posts may be added to reduce header spans to less than 6'-0". In such cases, the post footing must meet the requirements in section 2 of Appendix B. Plan submittal and approval is required for headers with a span length greater than 6'-0". Headers must be located no more than 3'-0" from the end of the trimmer joist.

Triple trimmer joists are required on each side of the header if joist spacing is 12" or 16" o.c. or if the trimmer joist span exceeds 8'-6"; otherwise, double trimmer joists are permitted. Trimmer joists may bear on the beam and extend past the beam centerline up to $L_J/4$ as shown in Figures 5 and 7 in Appendix B, or the trimmer joist may attach to the side of the beam with joist hangers as shown in Figure 6 in Appendix B. Joist hangers must each have a minimum download capacity in accordance with Table C–3. Bolts or lag screws used to attach the hanger to the ledger must fully extend through the ledger into the 2-inch nominal lumber band joist (1½" actual) or the EWP rim board. See Figure 15 in Appendix B for fastener spacing, and edge and end distances. Otherwise a free-standing deck is required.

Figure C–1
DETAIL FOR FRAMING AROUND A CHIMNEY OR BAY WINDOW

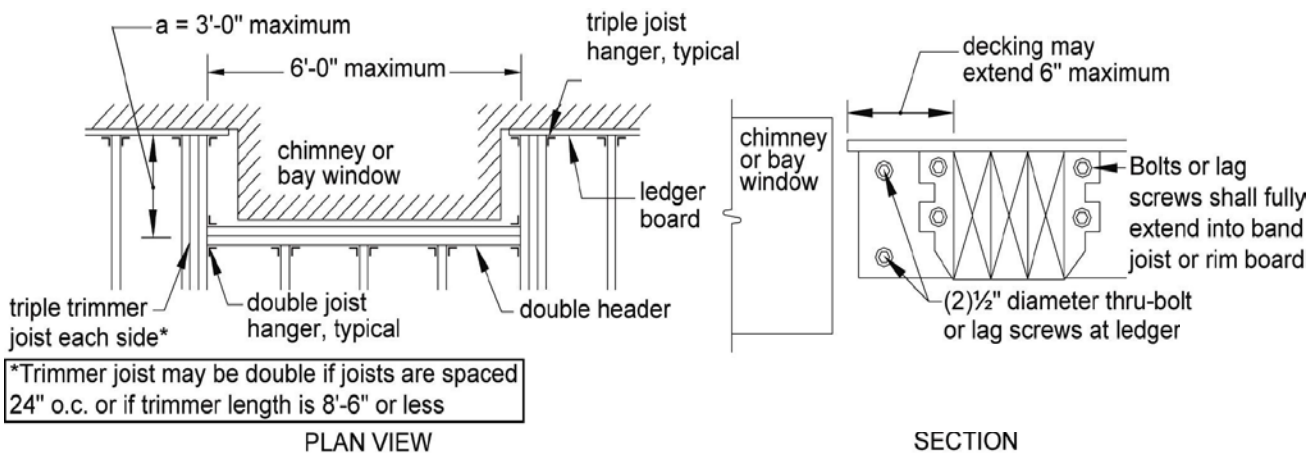

Table C–3
TRIMMER JOIST HANGER DOWNLOAD CAPACITY

Joist Size	Minimum Capacity, lbs
2x8	1050
2x10	1380
2x12	1500

6. Attachment of ledger boards to metal-plate-connected wood floor trusses. The research report on the following pages shows acceptable methods for attaching a ledger board to a metal-plate-connected wood-floor-truss system.

File reference: SPS 320-325/Rules decks 7

(Page intentionally skipped.)

Research Report

Attachment of Residential Deck Ledger to Metal Plate Connected Wood Truss Floor System

SRR No. 1408-01

Prepared for SBCA

Report Written by:

Jim Vogt, P.E.

October 1, 2014

SBCA is an APPROVED SOURCE

This research report is based on practical scientific research (literature review, testing, analysis, etc.), with the goal of supporting strategic needs for code and standards development and market expansion. This research report complies with the following sections of the building code:

- *IBC* Section 104.11.1 and Section 1703.4.2 – "Research reports. Supporting data, where necessary to assist in the approval of materials or assemblies not specifically provided for in this code, shall consist of valid research reports from *approved sources*."
- *IBC* Section 202 – "APPROVED SOURCE. An independent person, firm or corporation, *approved* by the *building official*, who is competent and experienced in the application of engineering principles to materials, methods or systems analyses."

Structural Building Components Association (SBCA) | 6300 Enterprise Lane, Madison, WI 53719 | 608-274-4849 | sbcindustry.com

Table of Contents

Introduction..... page 3

Key Definitions ..... page 3

Background..... page 3

Application ..... page 4

Installation..... page 4

Findings ..... page 11

References and Substantiating Data ..... page 11

Introduction:

This research report provides construction details for residential deck ledger attachment to metal plate connected wood truss floor systems. The applicable codes and standards follow the *2009* and *2012 International Building Code* (*IBC*) and the *2009* and *2012 International Residential Code* (*IRC*). Proper attachment of the deck ledger to the house is critical for ensuring that an "attached" deck is safely and securely supported at this location. This report provides details for attaching a 2" nominal lumber deck ledger to residential floor systems constructed with metal plate connected wood (MPCW) floor trusses.

Key Definitions:

Deck Ledger – A horizontal lumber beam attached to an existing wall and used to tie in construction elements such as porch roofs and decks. A deck ledger is installed as part of the deck frame construction and supports one end of the deck joists.

Truss – An engineered structural component, assembled from wood members, metal connector plates and other mechanical fasteners, designed to carry its own weight and superimposed design loads. The truss members form a semi-rigid structural framework and are assembled such that the members form triangles.

Wood Structural Panel (WSP) – A panel manufactured from wood veneers, strands or wafers or a combination of veneer and wood strands or wafers bonded together with waterproof synthetic resins or other suitable bonding systems. Examples include: plywood, Oriented Strand Board (OSB), waferboard and composite panels.

Background:

The *2009* and *2012 IRC* include prescriptive provisions for attaching a 2" nominal lumber deck ledger to a 2" nominal lumber band joist bearing directly on a sill plate or wall plate using ½"-diameter bolts or lag screws. AF&PA's American Wood Council, in cooperation with the International Code Council, has also developed *Design for Code Acceptance No. 6* (*DCA6*) – *Prescriptive Residential Deck Construction Guide*, available at awc.org.

The prescriptive provisions for the deck ledger connection to the band joist in the *IRC* and *DCA6* are based on the results from a series of ultimate load tests conducted at Virginia Polytechnic Institute and State University (VT) Department of Wood Science and Forest Products, and Washington State University (WSU) Wood Materials and Engineering Laboratory. This testing evaluated the capacity 2" nominal pressure-preservative-treated (PPT) Hem-Fir (HF) and Southern Pine (SP) ledgers attached to either 2" nominal Spruce-Pine-Fir (SPF) or 1" net Douglas-Fir (DF) laminated veneer lumber (LVL) band joists, through $^{15}/_{32}$"-thick oriented strand board (OSB) sheathing, with ½"-diameter hot-dipped galvanized (HDG) bolts or lag screws, meeting the requirements *of ANSI/ASME Standard B18.2.1*.

The deck ledger assemblies evaluated at VT and WSU were deemed to represent commonly accepted means of connecting deck ledgers to band joints that cannot be evaluated using the provisions of the *National Design Specification® for Wood Construction* (*NDS®*) because:

1. The ledger is not in direct contact with the band joist (i.e., separated by $^{15}/_{32}$" OSB sheathing).
2. The minimum required penetration depth of four diameters (4D) is not met when using ½"-diameter lag screws into an $1^{1}/_{2}$"-thick band joist.

Application:

The details and fastener spacing tables provided in this report for connecting a 2" nominal lumber deck ledger to a residential floor system constructed with MPCW trusses use a single shear reference lateral design value, Z, of 710 lbs. for a ½"-diameter bolt and 375 lbs. for a ½" x 6" lag screw. These lateral design values were developed from the VT and WSU testing, and assume the fasteners are installed in accordance with the *NDS* requirements for clearance holes, lead holes, edge distance and end distance.

Detail 1 includes construction information for attaching 2" nominal lumber deck ledgers to the ends of MPCW floor trusses spaced no more than 24" o.c. Table 1 provides the maximum on-center spacing for each ½"-diameter bolt or ½" x 6" lag screw used to attach the ledger to the floor truss system for deck joist spans up to 18', assuming a design deck load of 40 psf live load (or 40 psf snow load) and 10 psf dead load. Table 2 includes similar information as Table 1, except for a design deck load of 60 psf live load (or 60 psf snow load) and 10 psf dead load.

Detail 2 includes construction information for attaching 2" nominal lumber deck ledgers to the side of a MPCW floor ladder frame with 4x4 vertical webs spaced no more than 16" o.c. Table 3 provides the maximum on-center spacing for each ½"-diameter bolt and ½" x 6" lag screw used to attach the ledger to the ladder frame for deck joist spans up to 18', assuming a design deck load of 40 psf live load (or 40 psf snow load) and 10 psf dead load. Table 4 includes similar information as Table 3, except for a design deck load of 60 psf live load (or 60 psf snow load) and 10 psf dead load.

Detail 3 includes deck lateral load connection options capable of resisting the 1500 lbf lateral load requirement specified in *2009* and *2012 IRC* Section 507.

Support of concentrated loads from deck beams of girders are beyond the scope of this report. Deck ledgers shall not be supported on stone or masonry veneer.

Installation:

The following is a summary of the minimum requirements and limitations for installing a 2" nominal lumber deck ledger with residential floor systems constructed with MPCW floor trusses.

1. Ledger must be 2x10 or 2x12 PPT or code-approved decay-resistant lumber with a specific gravity, G $\geq$ 0.43. Ledger shall be identified by the grade mark of, or certificate of inspection issued by, an approved lumber grading or inspection bureau or agency. PPT material must be pressure-treated with an approved process in accordance with American Wood Protection Association standards
2. Install ledger directly over wood structural sheathing ($^{15}/_{32}$" maximum thickness) fastened to the wall per the building code.
3. Attach ledger through wood structural sheathing into 2-ply 2x4 truss end vertical, 4x4 vertical web or key-block with ½" x 6" lag screws or ½"-diameter bolts with washers and nuts.

   3.1 Only one (1) fastener into each truss member or key-block.

   3.2 Install each fastener through the centerline of the truss member or key-block and position so as not to interfere with bottom and top chord joints and connector plates. Refer to Detail 1 and Detail 2 for spacing requirements

   3.3 Lag screws and bolts shall be installed according to *2005 NDS* requirements. A "test" installation is recommended before drilling the lead holes, to ensure that the lead holes are neither too small nor too large.

   - ½" x 6" lag screws:
     - Lead holes for the threaded portion shall be $^{5}/_{16}$".

    - Clearance holes shall be ½" and the same depth of penetration as the length of unthreaded shank.

- ½"-diameter bolts:
    - Holes shall be a minimum of $^{17}/_{32}$" to a maximum of $^{9}/_{16}$".

All fasteners used with PPT wood shall be hot-dip zinc-coated galvanized steel, stainless steel, silicon bronze, or copper. Fasteners to be hot-dipped galvanized shall meet the requirements of *ASTM A153 – Standard Specification for Zinc Coating (Hot-Dip) on Iron and Steel Hardware*, Class D, for fasteners $^{3}/_{8}$" diameter and smaller or Class C for fasteners with diameters over $^{3}/_{8}$". Lag screws, bolts, nuts and washers are permitted to be mechanically deposited zinc-coated steel with coating weights in accordance with *ASTM B695*, Class 55, minimum.

All hardware (e.g., joist hangers, hold-down devise, etc.) shall be galvanized or shall be stainless steel. Hardware to be hot-dipped prior to fabrication shall meet *ASTM A653 – Standard Specification for Steel Sheet, Zinc-Coated (Galvanized) or Zinc-Iron Alloy-Coated (Galvannealed) by the Hot-Dip Process,* G-185 coating. Hardware to be hot-dipped galvanized after fabrication shall meet *ASTM A123 – Specification for Zinc (Hot-Dip Galvanized) Coatings on Iron and Steel Products*.

- Fasteners and hardware exposed to saltwater or located within 300' of a salt water shoreline shall be stainless steel grade 304 or 316.
- Fasteners and hardware shall be of the same corrosion-resistant material.
- Other coated or non-ferrous fasteners or hardware shall be as approved by the authority having jurisdiction.

4. Install flashing at top of ledger for water tightness. Flashing shall be corrosion-resistant metal of minimum nominal 0.019" thickness or an approved non-metallic material. Do not use aluminum flashing in direct contact with lumber treated with preservatives containing copper, such as ACQ, Copper Azole or ACZA.

5. Two-ply 2x4 truss end verticals, 4x4 truss vertical webs and key-blocks connected to ledger with lag screws or bolts shall have a specific gravity, G ≥ 0.42 (includes DF, HF, SP and SPF).

- Construct key-blocks with minimum 2x4 No. 2 or better lumber.
- Install key-blocks at required locations. Cut to fit tight.
- Refer to Detail 1 and Detail 2 for additional information concerning key-block construction and attachment.

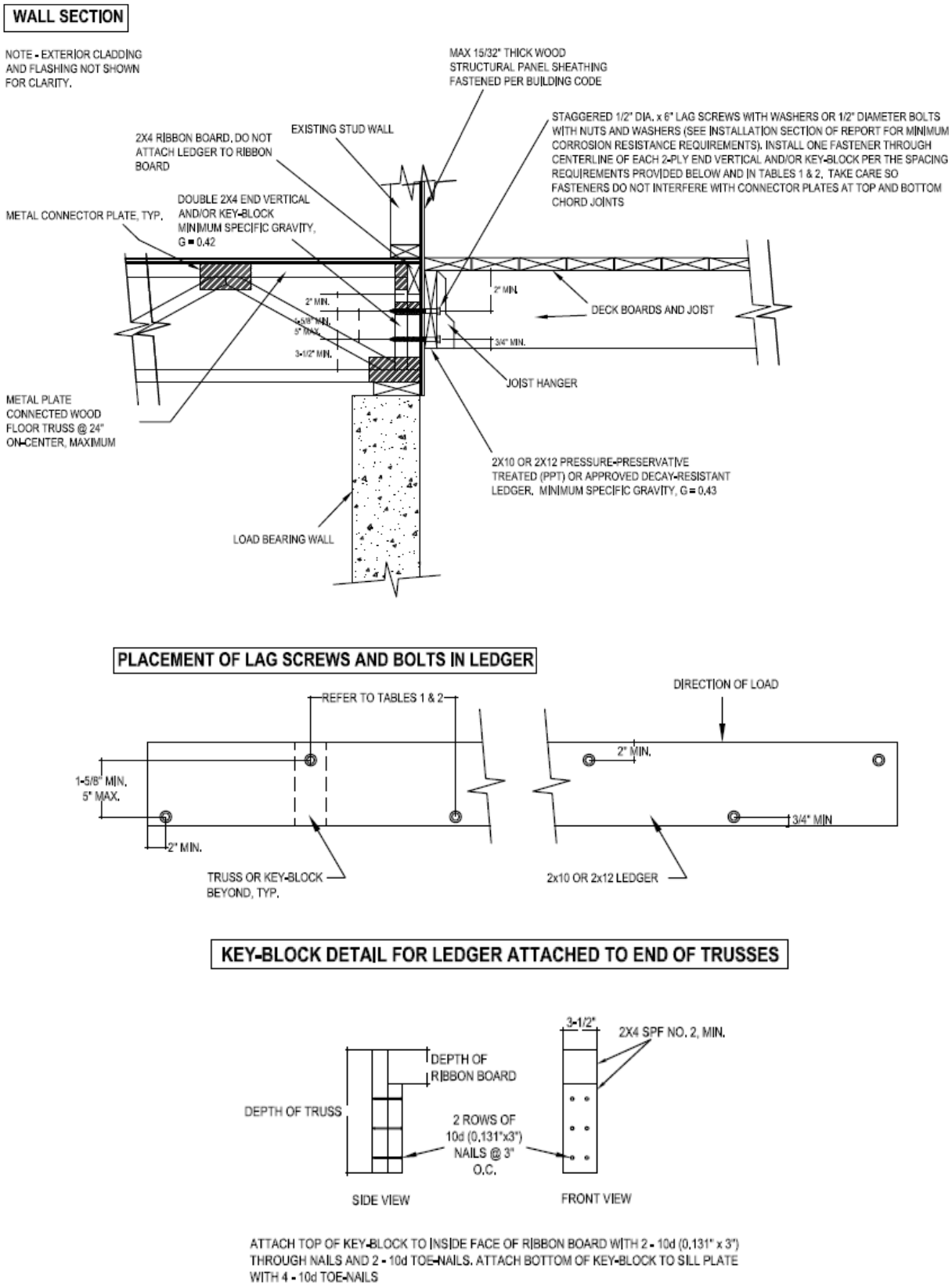

Detail 1: Attachment of Deck Ledger to Floor System with MPCW Trusses

Joist Span	≤ to 6'	6'-1" to 8'	8'-1" to 10'	10'-1" to 12'	12'-1" to 14'	14'-1" to 16'	16'-1" to 18'
Connection Details	On-center Spacing of Fasteners (in.)[4]						
½"x 6" lag screw with 15/32",max., wood structural panel sheathing	24	12[5]	12[5]	12[5]	12[5]	8[6]	8[6]
½" diameter bolt with 15/32", max., wood structural panel sheathing	24	24	24	24	24	12[5]	12[5]

1. Ledgers shall be flashed in accordance with applicable building code requirements to prevent water from contacting the exposed wood structural sheathing and floor truss.
2. Snow load shall not be assumed to act concurrently with live load.
3. Ledgers must be 2x10 or 2x12 PPT or code-approved decay-resistant lumber with specific gravity, G ≥ 0.43. Truss 2-ply 2x4 end verticals and key-blocks must have a G ≥ 0.42.
4. Stagger lag screws and bolts as shown in Detail 1.
5. Requires key-blocks at 24" o.c., maximum. Attach ledger to 2-ply end vertical of each truss with one (1) fastener and to each key-block with one (1) fastener. Refer to Detail 1 for key-block construction and installation information.
6. Requires two (2) key-blocks at 8" o.c., maximum, between each truss. Attach ledger to 2-ply end vertical of each truss with one (1) fastener and to each key-block with one (1) fastener. Refer to Detail 1 for key-block construction and installation information.

Table 1: Deck Ledger Connection to Ends of MPCW Floor Trusses Spaced 24" o.c., Max.[1,2,3]
(Deck Live Load = 40 psf, Deck Dead Load = 10 psf, Snow Load ≤ 40 psf)

Joist Span	≤ to 6'	6'-1" to 8'	8'-1" to 10'	10'-1" to 12'	12'-1" to 14'	14'-1" to 16'	16'-1" to 18'
Connection Details	On-center Spacing of Fasteners (in.)[4]						
½" x 6" lag screw with 15/32",max., wood structural sheathing	12[5]	12[5]	12[5]	8[6]	8[6]	8[6]	Use bolted connection
½" diameter bolt with 15/32", max., wood structural sheathing	24	24	24	12[5]	12[5]	12[5]	12[5]

1. Ledgers shall be flashed in accordance with applicable building code requirements to prevent water from contacting the exposed wood structural sheathing and floor truss.
2. Snow load shall not be assumed to act concurrently with live load.
3. Ledgers must be 2x10 or 2x12 PPT or code-approved decay-resistant lumber with specific gravity, G ≥ 0.43. Truss 2-ply 2x4 end verticals and key-blocks must have a G ≥ 0.42.
4. Stagger lag screws and bolts as shown in Detail 1.
5. Requires key-blocks at 24" o.c., maximum. Attach ledger to 2-ply end vertical of each truss with one (1) fastener and to each key-block with one (1) fastener. Refer to Detail 1 for key-block construction and installation information.
6. Requires two (2) key-blocks at 8" o.c., maximum, between each truss. Attach ledger to 2-ply end vertical of each truss with one (1) fastener and to each key-block with one (1) fastener. Refer to Detail 1 for key-block construction and installation information.

Table 2: Deck Ledger Connection to Ends of MPCW Floor Trusses Spaced 24" o.c., Max.[1,2,3]
(Deck Live Load = 60 psf, Deck Dead Load = 10 psf, Snow Load ≤ 60 psf)

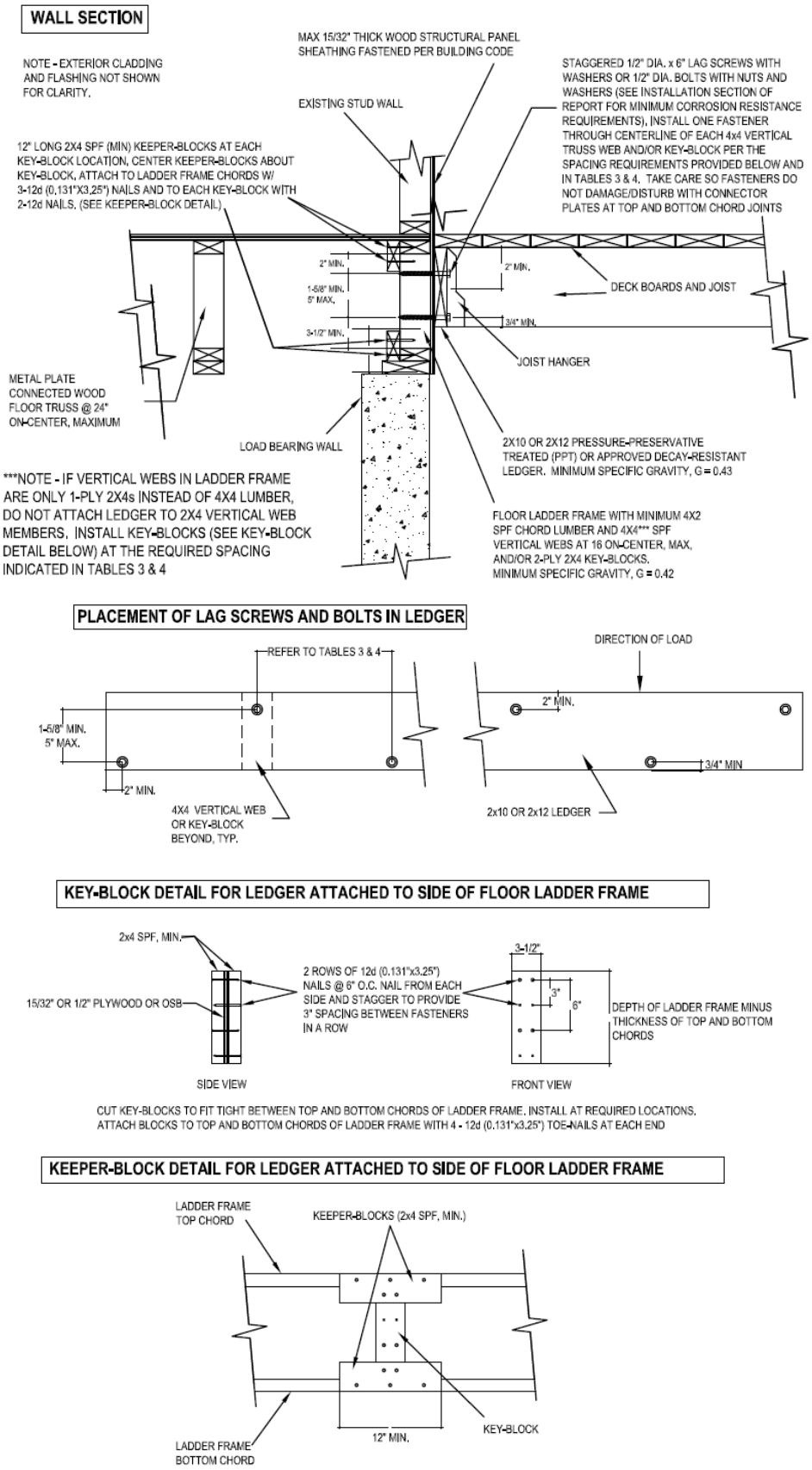

Detail 2: Attachment of Deck Ledger to Floor System with MPCW Trusses,
When Ledger is Installed Parallel to Truss Span & Spacing of Screws is Less Than the Spacing of the Verticals

Joist Span	< 6' to 8'	8'-1" to 10'	10'-1" to 12'	12'-1" to 14'	14'-1" to 16'	16'-1" to 18'
Connection Details	On-center Spacing of Fasteners (in.)[4]					
½" x 6" lag screw with 15/32",max., wood structural sheathing	16	16	8[5]	8[5]	8[5]	8[5]
½" diameter bolt with 15/32", max., wood structural sheathing	32	32	16	16	16	16

1. Ledgers shall be flashed in accordance with applicable building code requirements to prevent water from contacting the exposed wood structural sheathing and floor truss.
2. Snow load shall not be assumed to act concurrently with live load.
3. Ledgers must be 2x10 or 2x12 PPT or code-approved decay-resistant lumber with specific gravity, G > 0.43. Truss 4x4 vertical web and key-blocks must have a G > 0.42.
4. Stagger lag screws and bolts as shown in Detail 2.
5. Requires key-blocks at 16" o.c., maximum. Attach ledger to each 4x4 vertical web with one (1) fastener and to each key-block with one (1) fastener. Refer to Detail 2 for key-block construction and installation information.

Table 3: Deck Ledger Connection to Side of MPCW Floor Ladder Frame with 4s4 Vertical Webs Spaced at 16" o.c., Max.[1,2,3]
(Deck Live Load = 40 psf, Deck Dead Load = 10 psf, Snow Load ≤ 40 psf)

Joist Span	< 6' to 8'	8'-1" to 10'	10'-1" to 12'	12'-1" to 14'	14'-1" to 16'	16'-1" to 18'
Connection Details	On-center Spacing of Fasteners (in.)[4]					
½" x 6" lag screw with 15/32",max., wood structural sheathing	16	8[5]	8[5]	8[5]	8[5]	Use bolted connection
½" diameter bolt with 15/32", max., wood structural sheathing	32	16	16	16	8[5]	8[5]

1. Ledgers shall be flashed in accordance with applicable building code requirements to prevent water from contacting the exposed wood structural sheathing and floor truss.
2. Snow load shall not be assumed to act concurrently with live load.
3. Ledgers must be 2x10 or 2x12 PPT or code-approved decay-resistant lumber with specific gravity, G > 0.43. Truss 4x4 vertical web and key-blocks must have a G > 0.42.
4. Stagger lag screws and bolts as shown in Detail 2.
5. Requires key-blocks at 16" o.c., maximum. Attach ledger to each 4x4 vertical web with one (1) fastener and to each key-block with one (1) fastener. Refer to Detail 2 for key-block construction and installation information.

Table 4: Deck Ledger Connection to Side of MPCW Floor Ladder Frame with 4x4 Vertical Webs Spaced at 16" o.c., Max.[1,2,3]
(Deck Live Load = 60 psf, Deck Dead Load = 10 psf, Snow Load ≤ 60 psf)

LEDGER ATTACHED TO ENDS OF TRUSSES

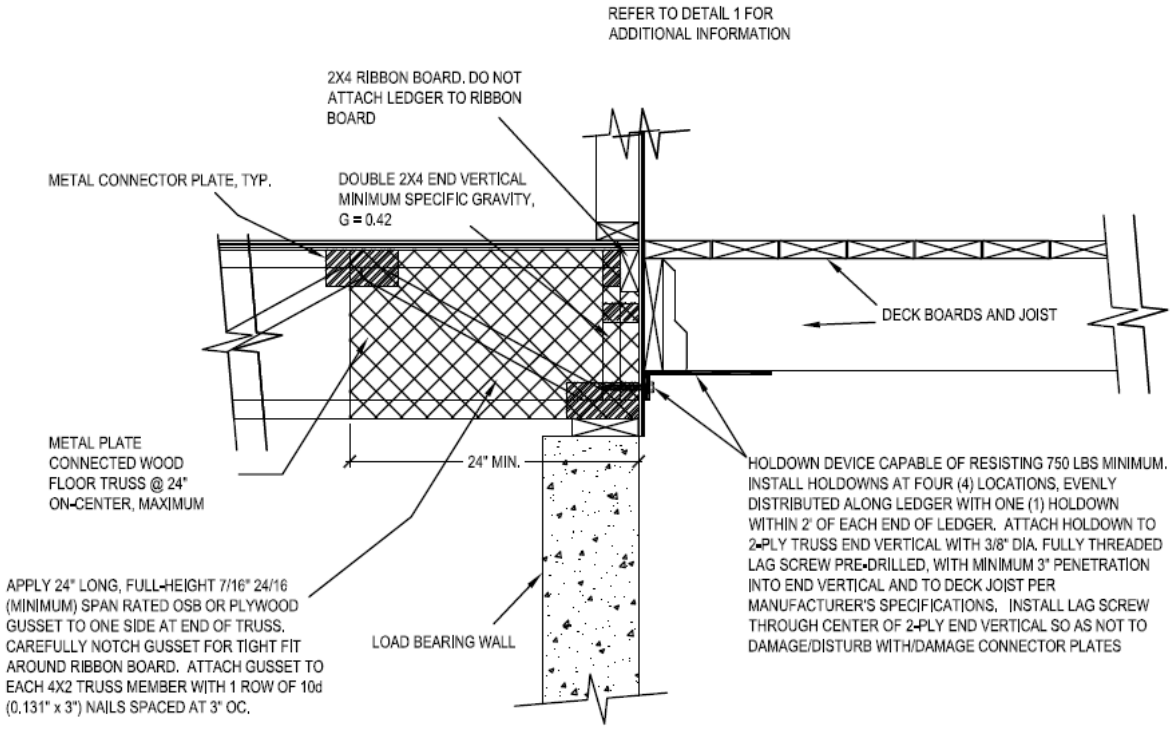

LEDGER ATTACHED TO SIDE OF FLOOR LADDER FRAME

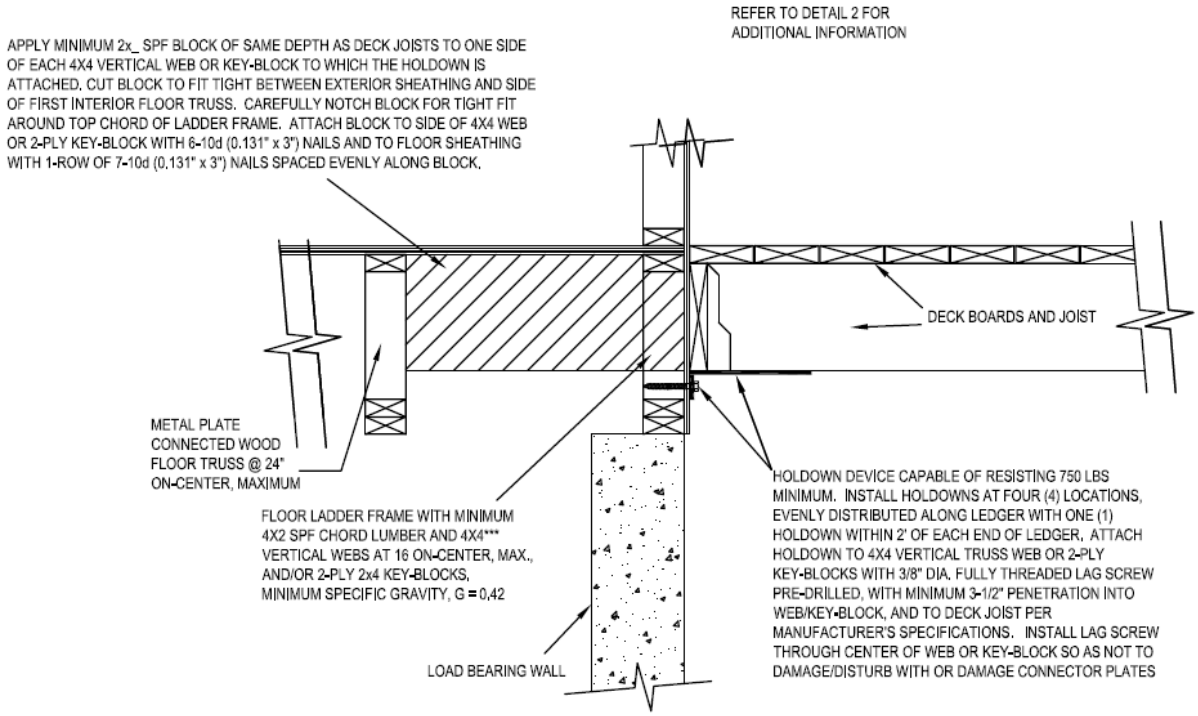

Detail 3: Deck Lateral Load Connection Capable of Resisting the 1500 lbf Lateral Load Requirement Specified in *2009* & *2012 IRC* Section 507

Findings:

Nailing deck ledgers to metal plate connected wood truss floor systems is not sufficient. The deck ledger must be attached to the truss or key-block with lag screws or bolts. Various options and connection details for achieving the connection of the deck ledger to the metal plate connected wood truss floor system are provided in this report, which may be referred to by the building designer to achieve a code-conforming deck ledger connection.

IBC Section 104.11 and *IRC* Section R104.11 (*IFC* Section 104.9 is similar) state:

> 104.11 Alternative materials, design and methods of construction and equipment. The provisions of this code are not intended to prevent the installation of any material or to prohibit any design or method of construction not specifically prescribed by this code, provided that any such alternative has been *approved*. An alternative material, design or method of construction shall be *approved* where the *building official* finds that the proposed design is satisfactory and complies with the intent of the provisions of this code, and that the material, method or work offered is, for the purpose intended, at least the equivalent of that prescribed in this code. ... Where the alternative material, design or method of construction is not *approved*, the *building official* shall respond in writing, stating the reasons the alternative was not *approved*.[1]

This research report is subject to periodic review and revision. For the most recent version of this report, visit sbcindustry.com. For information on the current status of this report, contact SBCA.

References and Substantiating Data:

Anderson, C.A., Woeste, F.E. and Loferski, J.R. 2003; *Manual for the Inspection of Residential Wood Decks and Balconies*; Forest Products Society, 2801 Marshall Ct., Madison, WI 53705.

ANSI/AWC NDS-2012, *ASD/LRFD NDS®*; *National Design Specification for Wood Construction*. 2012; American Wood Council, 222 Catoctin Circle, SE, Suite 201, Leesburg, VA 20175.

Carradine, D.M., Bender, D., Loferski, J.R. and Woeste, F.E. 2005; Residential Deck Ledger Design; *Building Safety Journal*, December, 2005: (4-7).

Carradine, D.M., Bender, D., Loferski, J.R. and Woeste, F.E. 2006; Residential Deck Ledger Connection Testing and Design; *Structure Magazine*, May, 2008: (53-56).

Design for Code Acceptance, DCA 6, Prescriptive Residential Wood Deck Construction Guide; 2009; American Wood Council, 222 Catoctin Circle, SE, Suite 201, Leesburg, VA 20175.

Loferski, J.R., Woeste, F.E., Caudill, R., Platt, T. and Smith, Q. 2004; Load-Tested Deck Ledger Connections; *Journal of Light Construction*. 22(6):71-78.

Woeste, F.E. 2008; Safe and Durable Coastal Decks; *Coastal Contractor*, March/April, 2008: (1-7).

[1] The last sentence is adopted language in the 2015 codes.

Comments from Deck Subcommittee regarding proposed draft Deck Rules

The Deck Sub-Committee members reviewed the draft of the Deck Rules and had a number of corrections which were incorporated into the version of the draft Deck Rules dated March 3, 2015. The following items were not incorporated in the draft rules, but are listed here for discussion by the Dwelling Code Council

- **Section 1, Number 9, Note 1**
  Publication DCA 6 from the American Wood Council is considered equivalent to these standards and can be used to obtain a permit in Wisconsin. Go to awc.org to learn more or to download DCA 6. – Note should be shown as a listed "General Requirement" since it is allowing a major deviation from Appendix B.

- **Section 8, General Requirements, Number 4**
  The top of the ledger board and the top of the deck joists must be at the same elevation. – Does it have to be?

- **Section 11, Tension-tie requirements**
  The tension-tie method for lateral support may be a problem for step-down decks attached to a wood framed wall such as a partial or full rear exposure wall. Is there technical justification that supports this method of lateral support? Is it equivalent to the hold-down tenion devices shown in Figure 20?

- **Section 12, number 3**
  Decking may overhang a joist by up to 3 inches unless disallowed in the manufacturer's instructions. – The 3 inch overhang of treated dimensional lumber seems excessive.

- **Section 14, Stairs, Stair Handrails, Number 6**
  Handrails may be interrupted by guard posts at a turn in the stair rail only. – I think this will be a huge change from the way decks have currently been built using composites. Looking at Trex and Timbertech catalogs and they all show pictures with the guard post above the rail to accept the 6' & 8' sections they sell, except mainly cable rail situations. Trex does have an option I've really never seen used to make it work called Aluminum ADA compliant handrail as seen in the attached pictures, it is pretty pricey. I think rule 6 should be bypassed at this time for decks, to allow the new deck rules to work with most current composite decking systems.

- **Appendix C, Table C-2**
  With overhangs - how much overhang? See Section 5, Number 4.