IN-GROUND DOSED-GRAVITY DISPERSAL AREA
Uniform Elevation Trenches with Quick4 Standard-W Chambers
3-ft Trench (down-sizing credit)

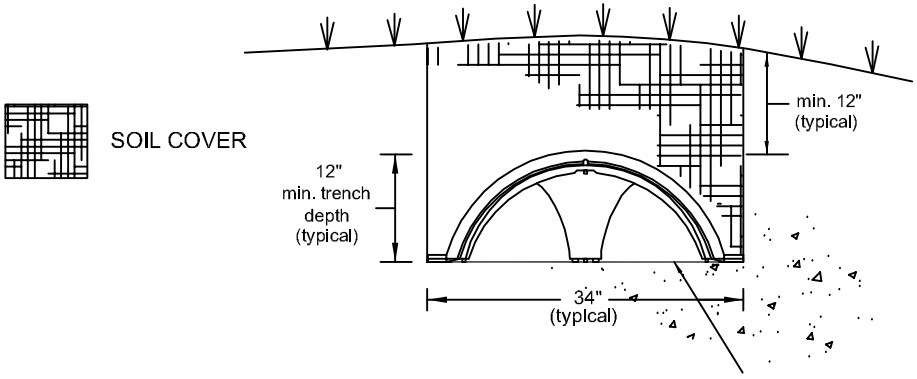

TYPICAL TRENCH
CROSS SECTION VIEW
(No Scale)

System Elevation = _____ ft
(typical)

Provide minimum 3 ft
separation between trenches.

Quick4 Standard-W
w/ End Cap
(typical)

(Show location of inlet / outlet pipe connection on plan view.)

Observation Pipe
(typical)
Install per manufacturer's
instructions.

TYPICAL TRENCH
PLAN VIEW
(No Scale)

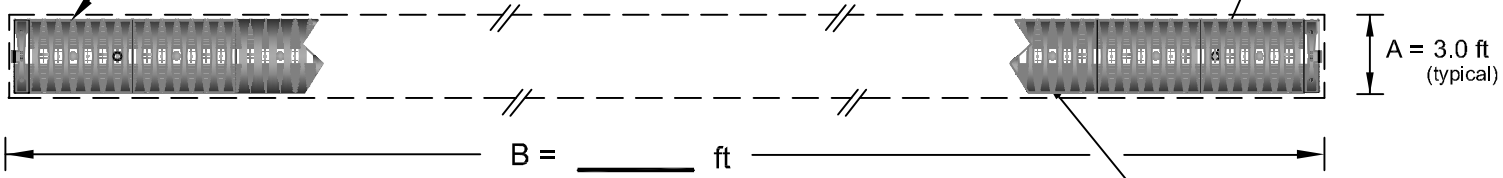

Quick4 Standard-W Chamber
(typical)
(mfd by Infiltrator Systems, Inc.)
Install pursuant to manufacturer's instructions.

PAGE 3 OF 5

INSTALL PER TRENCH:

_____ Quick4 Std-W @ 20 ft^2 EISA/chamber = _____ ft^2

\+ _____ Pairs of end caps @ 6 ft^2 EISA/pair = _____ ft^2

= Proposed EISA per trench = _____ ft^2

Required Infiltration Area = _____ ft^2

x _____ trenches = Proposed Total EISA = _____ ft^2

Distribution Method:

_____

RESET