IN-GROUND DOSED-GRAVITY DISPERSAL AREA
Stepped Elevation Trenches with Quick4 Standard-W Chambers
3-ft Trench (down-sizing credit)

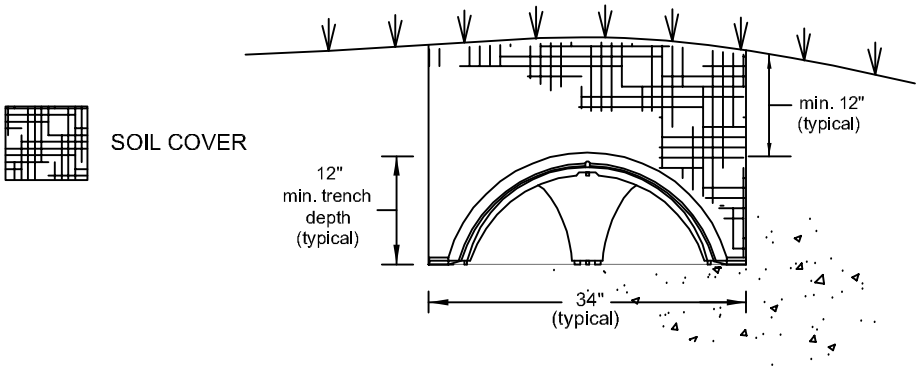

TYPICAL TRENCH
CROSS SECTION VIEW
(No Scale)

Highest Trench → Lowest Trench (as applicable)

Provide minimum 3 ft separation between trenches.

System Elevations = _____ ft; _____ ft; _____ ft; _____ ft; _____ ft

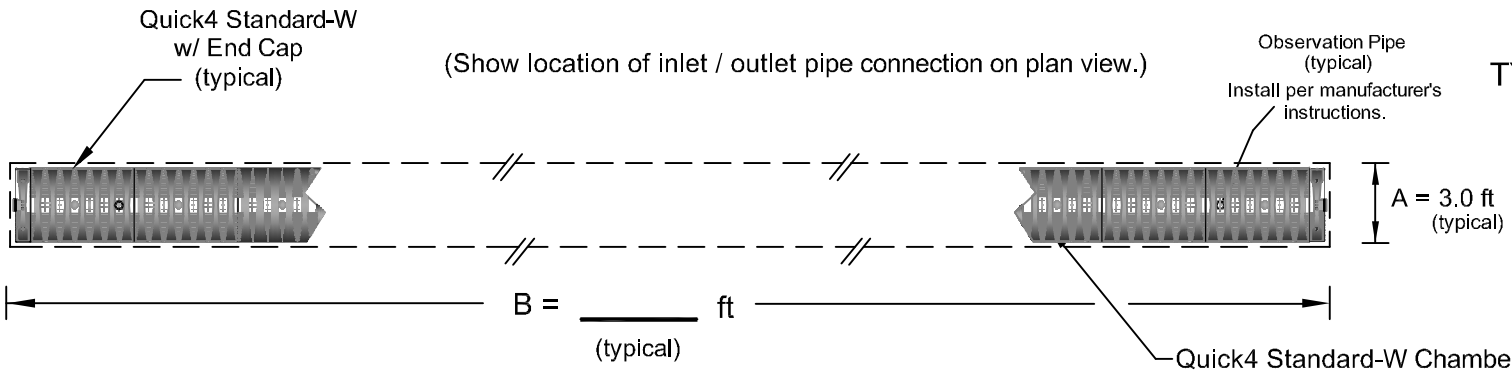

TYPICAL TRENCH
PLAN VIEW
(No Scale)

INSTALL PER TRENCH:

_____ Quick4 Std-W @ 20 ft^2 EISA/chamber = _____ ft^2

\+ _____ Pairs of end caps @ 6 ft^2 EISA/pair = _____ ft^2

= Proposed EISA per trench = _____ ft^2

Required Infiltration Area = _____ ft^2

x _____ trenches = Proposed Total EISA = _____ ft^2

Distribution Method: _____

RESET