IN-GROUND GRAVITY DISPERSAL AREA
Uniform Elevation Trenches with Quick4 Standard-W Chambers
3-ft Trench (down-sizing credit)

Septic Tank(s) Manufacturer: _____

Septic Tank(s) Volume(s):

_____ gal _____ gal _____ gal _____ gal

Effluent Filter Manufacturer: _____

Effluent Filter Model #: _____

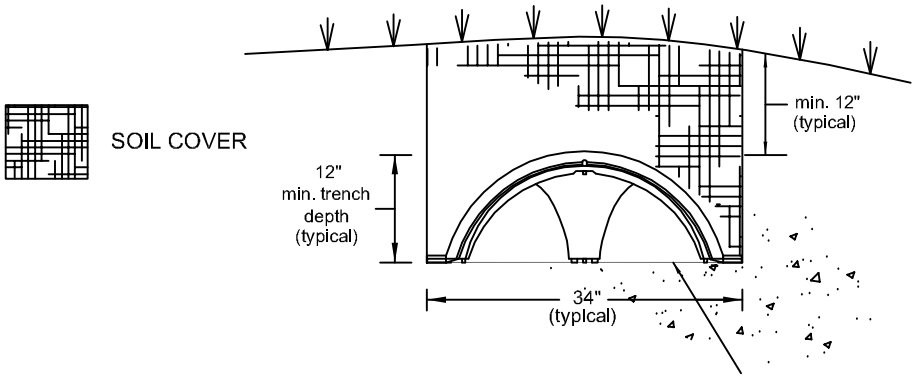

System Elevation = _____ ft
(typical)

TYPICAL TRENCH
CROSS SECTION VIEW
(No Scale)

Provide minimum 3 ft
separation between trenches.

(Show location of inlet / outlet pipe connection on plan view.)

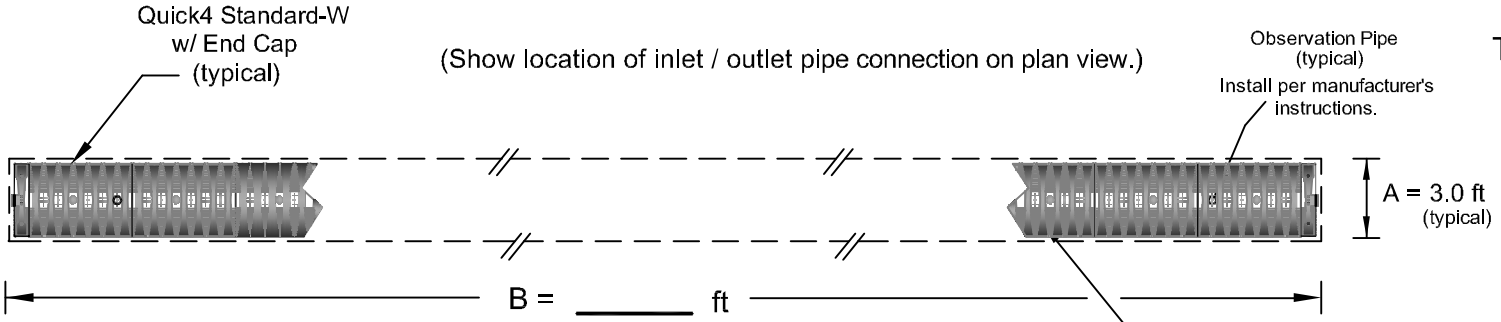

TYPICAL TRENCH
PLAN VIEW
(No Scale)

PAGE 3 OF 4

INSTALL PER TRENCH:

_____ Quick4 Std-W @ 20 ft^2 EISA/chamber = _____ ft^2

\+ _____ Pairs of end caps @ 6 ft^2 EISA/pair = _____ ft^2

= Proposed EISA per trench = _____ ft^2

Required Infiltration Area = _____ ft^2

x _____ trenches = Proposed Total EISA = _____ ft^2

Distribution Method: _____

RESET