State of Wisconsin \ Department of Safety and Professional Services

HEARING DRAFT OF PROPOSED RULES

Rule No.: **Chapters Comm 41 and 45**

Relating to: **Boilers and Pressure Vessels**

PROPOSED ORDER OF THE
DEPARTMENT OF SAFETY AND PROFESSIONAL SERVICES

CREATING RULES

The Wisconsin Department of Safety and Professional Services proposes an order to repeal Comm 41.02 (1) (b) 1. Note; 41.04 (11), (19) and (30); 41.10 (1) and (2) (title); 41.16 (2) (f) and (g); 41.44 Note; 41.55 (3) (a) (title) and (b) and 41.56 (1) (title) and (2);

to renumber Comm 41.04 (12), (14) to (18), (20), (22), (26) to (28), (32), (35) to (38) and (40); 41.07 (2); 41.16 (1) (a); 41.17 (5) and 41.33 (1) (intro.), (b) and (3);

to renumber and amend Comm 41.04 (13), (21), (23) to (25), (29), (31), (33), (34) and (39); 41.10; 41.28 (3) (b) Notes; 41.33 (intro.), (1) (title) and (a) and (3); 41.41 (2) (c); 41.53; 41.55 (1) and (3) (a); 41.56 (1) and 41.62 (1) and Note;

to amend Comm 41.01; 41.02 (1) (a) and (b) 1.; 41.04 (intro.), (1), (6) and (7); 41.05 and Notes; 41.06; 41.08; 41.15 (1) (intro.) and (a) and (3); 41.16 (title), (1) (b) 2., (c) and (e) and Note, (2) (a), (d) and Note and (e) and Note and (3) (title) and (a); 41.17 (1) (title) and (a) and (4); 41.18 (1) (o); 41.19 (1); 41.23 (3) (a); 41.24 (1) (a) 2. and (2); Comm 41.27; 41.28 (3); 41.29 (1); 41.30 (1) (a) and (c) and (2); 41.31 (1) (b), (2) and (4) (intro.) to (d); 41.32 (2); 41.36; 41.37 (3) Note; 41.38 (1) and (4) Note; 41.40; 41.41 (1) (a) and Note and (b) (intro.) and 1., (2) (a) and Note and (4) (b) and Note; 41.42 (1), (2) (a) and (3); 41.44; 41.45 (1) (a) to (d) and (3) (b); 41.46 (1) and (2); 41.47 (intro.) and (1) to (3); 41.48 and Note; 41.49 (3) (a) and (c); 41.54 (1) and Note; 41.55 (2), (3) Note and (4); 41.56 Note; 41.57; 41.60; 41.62 (title) and (2) (a); 41.63 (1) Note, (2) and (3); 41.64 (1) (a), (3) (intro.) and (4) (a); 41.70; 41.73; 41.75 (1), (2) and Note; 41.90; 41.91 (title) and (1) and 41.92 (title), (1) (c) Note and (2) (a);

to repeal and recreate Comm 41.03, 41.23 (1) and (2) (a) and 41 Appendix;

and to create Comm 41.02 (1) (b) 3. and Note and (2) Note; 41.04 (2) Note, (4), (12), (23) and (38); 41.07 (1); 41.09; 41.10 (2) (d) and (e) and (4); 41.11; 41.15 (1) Note and (4); 41.16 (1) (a) 2. and (3) Note; 41.17 (5) and (7); 41.29 (2) (b) 2. e.; 41.42 (1) Note [3] and (4); 41.53 (2) and Note; 41.55 (1) (a) (title) and (b) and (4) Notes; 41.62 (1) (b); 41.93 and 45.31 (2) (d) relating to boilers and pressure vessels, and affecting small businesses.

****

Rule Summary

1. Statutes Interpreted

Sections 101.02 (1) and (15) (h) to (j), and 101.17

2. Statutory Authority

Sections 101.02 (1) and (15) (h) to (j), 101.17, and 227.11 (2) (a).

3. Explanation of Agency Authority

Under sections 101.02 (1) and (15) (h) to (j) of the Statutes, the Department is required to establish rules and prescribe safeguards for protecting the life, health, safety and welfare of employees and frequenters of public buildings and places of employment. Under section 101.17 of the Statutes, installation and use of machines, mechanical devices and steam boilers must comply with the rules of the Department. The Department also has authority under section 227.11 (2) (a) of the Statutes to promulgate rules interpreting any statute that is enforced or administered by the Department, if the rule is considered necessary to effectuate the purpose of the statute.

4. Related Statute or Rule

Most of the boilers and pressure vessels that are addressed by the proposed rule changes are within public buildings and places of employment, which are addressed by the Wisconsin Commercial Building Code, which consists of chapters Comm 61 to 66. Some of the pressure vessels that are addressed by the proposed rule changes are in mechanical refrigeration systems, which are addressed in chapter Comm 45.

5. Plain Language Analysis

Chapter Comm 41 contains Wisconsin's minimum safety standards for design, construction, installation, operation, inspection, testing, maintenance, repair and alteration of boilers, pressure vessels, power piping and solid-fuel-fired water-heating appliances that are installed for public buildings, places of employment, and one- or two-family dwellings.

The proposed changes would primarily update this chapter to have it include newer editions of several referenced national model codes and standards from the American Society of Mechanical Engineers (ASME) and the National Board of Boiler and Pressure Vessel Inspectors – such as the ASME *Boiler and Pressure Vessel Code*. The changes also include newly adopting two additional, closely related industry-consensus safety standards: ASME CSD-1, for controls and safety devices for automatically fired boilers having fuel-input ratings of 400,000 or more Btu per hour; and NFPA® 55, for compressed gases and cryogenic fluids. Consent to adopting the referenced standards will be obtained from the Attorney General prior to incorporating the standards into the rules.

The changes would also discontinue applying ASME nuclear power plant requirements that differ from the requirements applied by the federal Nuclear Regulatory Commission. The changes would also clarify and refine some of the administrative elements of the chapter, such as how authorized agents and insurance companies can participate in enforcing the chapter. Overall, the changes would essentially make this chapter consistent with current, nationwide industry standards and practices for boilers and pressure vessels.

6. Summary of, and Comparison With, Existing or Proposed Federal Regulations

The federal Nuclear Regulatory Commission has regulations for construction, operation, inspection and licensing of nuclear power plants in Parts 50.55a to 50.57 of Title 10 of the *Code of Federal Regulations* (CFR). An Internet-based search indicated that the current edition of these

regulations is dated January 1, 2011, and this edition applies various requirements developed by ASME for the boilers and pressure vessels in these facilities.

An Internet-based search revealed that on March 10 to 12, 2011, the Advisory Committee on Reactor Safeguards held its 581st meeting and agreed to proposed final revisions for the next edition of 10 CFR 50.55a.

7. Comparison With Rules in Adjacent States

An Internet-based search found that the four adjacent states adopt by reference the following editions and addenda of the ASME *Boiler and Pressure Vessel Code* and related standards. These states also create amendments to the adopted standards similar to Wisconsin's administrative rules for boilers and pressure vessels.

a. The Illinois Office of the State Fire Marshal, Division of Boiler and Pressure Vessel Safety regulates the construction, installation, operation, inspection and repair of boilers and pressure vessels throughout the state of Illinois. The Illinois boiler and pressure vessel safety rules are similar to the requirements in the Wisconsin Boiler and Pressure Vessel Code, including the Illinois incorporation by reference of the ASME *Boiler and Pressure Vessel Code* (2007 edition), ASME CSD-1 (2004 edition) and the *National Board Inspection Code* (2007 edition).

b. The Iowa Department of Workforce Development, Division of Labor Services administers and enforces the Boilers and Unfired Pressure Vessels Chapter of the Iowa Code. That chapter requires new installations of boilers and pressure vessels to be designed, manufactured, installed, inspected and stamped in accordance with the applicable requirements of the ASME *Boiler and Pressure Vessel Code* (2007 edition with 2008a and 2009b addenda); ASME CSD-1 (2009 edition); ASME B3l.l *Power Piping* (2007 edition); and the *National Board Inspection Code* (2007 edition with 2008, 2009 and 2010 addenda).

c. The Michigan Department of Licensing and Regulatory Affairs, Boiler Division administers the Michigan Boiler Rules. The rules are similar to the Wisconsin rules and establish minimum standards of safety for the construction, installation, inspection, use, alteration and repair of boilers, with limited rules for specified pressure vessels. The rules adopt the ASME *Boiler and Pressure Vessel Code* (2007 edition and 2008a addenda), ASME B3l.l *Power Piping* (2007 edition), and the *National Board Inspection Code* (2007 edition).

d. The Minnesota Department of Labor and Industry, Division of Construction Codes and Licensing administers rules that address the manufacture, installation, repair, operation, safety and inspection of boilers, pressure vessels and appurtenances. The rules also contain provisions for licensing of boiler operators, and include minimal requirements for hobby boilers (steam traction engines). The rules are similar to the Wisconsin rules and incorporate the most recent editions and addenda of the ASME *Boiler and Pressure Vessel Code* and the *National Board Inspection Code*.

8. Summary of Factual Data and Analytical Methodologies

The methodology for this update of chapter Comm 41 consisted primarily of reviewing and assessing the latest editions of the national model codes and standards that serve as the basis for the chapter. In reviewing these latest editions, Department staff concluded that these codes and

standards are clearer and provide more detail than the current requirements and standards in Comm 41, and would not impose significant additional costs or other impacts on a substantial number of businesses. The Department's Boiler and Pressure Vessel Code Advisory Council then agreed with these conclusions. The members of that Council represent the many stakeholders involved in the boiler and pressure vessel industry including manufacturers, inspectors, building contractors, regulators, labor, insurance and the public. The following organizations are represented on the Council:

American Insurance Association
Boiler and Pressure Vessel Repairers Association
City of Milwaukee
HSB Global Standards
Plumbing, Mechanical and Sheet Metal Contractors Alliance
Wisconsin Boiler Inspector's Association
Wisconsin Historical Steam Engine Association
Wisconsin Manufacturers & Commerce
Wisconsin Pipe Trades Association
Wisconsin Utilities Association

The Department believes the referenced national model codes and standards reflect contemporary societal values with respect to protecting public health, safety and welfare in the design, construction, use, operation and maintenance of boilers and pressure vessels in commercial and public buildings and places of employment. For example, the ASME *Boiler and Pressure Vessel Code* is kept current by the ASME Boiler and Pressure Committee, which was established 100 years ago in response to boiler accidents that were causing upwards of 50,000 deaths annually. The Committee now consists of more than 950 engineers, and meets regularly to consider requests for interpretations and revisions and to develop new rules. In the formulation of its rules and in the establishment of maximum design and operating pressures, the Committee considers ongoing advances in materials, construction, methods of fabrication, inspection, certification and overpressure protection. The ASME *Boiler and Pressure Vessel Code* is now adopted in part or in its entirety by all 50 states and numerous municipalities and territories of the United States, and by all the provinces of Canada. More than 92,000 copies of the *Code* are in use in over 100 countries, and this use is supported by ASME, which now includes more than 120,000 members in over 150 countries worldwide.

Wisconsin first adopted rules that were consistent with the ASME *Boiler and Pressure Vessel Code* in 1915, and has routinely adopted the latest edition of this code by reference since 1956. Keeping Wisconsin's requirements consistent with this industry standard avoids having manufacturers, suppliers, inspectors and insurers of the regulated equipment face a regulatory environment here that differs from their practices elsewhere.

9. Analysis and Supporting Documents Used to Determine Effect on Small Business or in Preparation of Economic Impact Report

The Department used its Boiler and Pressure Vessel Code Advisory Council to gather and analyze information on potential impacts in complying with both the technical and administrative requirements of the proposed rules. A responsibility of council members is to bring forth any

concerns that their respective organizations may have with the current and proposed requirements, and any concerns for potential economic impacts.

In addition to posting rule-development and council activities on its Web site, the Department offers an e-mail subscription service, which is available to all small businesses. This service provides e-mail notification of council meetings, meeting agendas and Council-meeting progress reports so small businesses can follow proposed code changes.

Consideration of the potential effects on small business was based on guidelines produced by the federal Small Business Administration's Office of Advocacy.

10. Effect on Small Business.

The proposed changes are not expected to impose significant additional costs or other impacts on a substantial number of businesses because the primary effect of the changes is to make chapter Comm 41 consistent with current, nationwide industry standards and practices for boilers and pressure vessels.

11. Agency Contact Information

Sam Rockweiler, Wisconsin Department of Safety and Professional Services, Division of Environmental and Regulatory Services, P.O. Box 14427, Madison, WI, 53708-0427; telephone (608) 266-0797; e-mail sam.rockweiler@wi.gov.

12. Place Where Comments Are to Be Submitted, and Deadline for Submission.

Comments on the proposed rule changes may be submitted by e-mail to sam.rockweiler@wi.gov, no later than November 14, 2011. If e-mail submittal is not possible, written comments may be mailed, by the same date, to Sam Rockweiler, Department of Safety and Professional Services, Division of Environmental and Regulatory Services, P.O. Box 14427, Madison, WI 53708-0427.

File reference: Comm 41/rule analysis PH2

SECTION 1. Comm 41.01 is amended to read:

Comm 41.01 Purpose. ~~The~~ Pursuant to ss. 101.02 (15), 101.17 and 101.63, the purpose of this chapter is to protect the health, safety and welfare of the public and employees by establishing minimum standards for the design, construction, installation, operation, inspection, testing, maintenance, alteration and repair of boilers, ~~and~~ pressure vessels, power piping and solid-fuel-fired water-heating appliances.

SECTION 2. Wherever the phrase "solid fuel-fired water-heating appliance" occurs in chapter Comm 41, insert a hyphen after "solid."

SECTION 3. Comm 41.02 (1) (a) is amended to read:

Comm 41.02 (1) (a) Except as provided in par. (b), ~~the provisions of~~ this chapter ~~apply~~ applies to boilers and piping components associated with boilers, ~~and to~~ pressure vessels, ~~and~~ power piping, and solid-fuel-fired water-heating appliances in use at places of employment, in public buildings and at one- or 2-family dwellings.

SECTION 4. Comm 41.02 (1) (b) 1. is amended to read:

Comm 41.02 (1) (b) 1. ~~The provisions of subchs.~~ Subchapters V, VIII and IX ~~shall~~ do not apply to one- or 2-family dwellings.

SECTION 5. Comm 41.02 (1) (b) 1. Note is repealed.

SECTION 6. Comm 41.02 (1) (b) 3. and Note are created to read:

Comm 41.02 (1) (b) 3. This chapter does not apply to the gas systems that are within the scope of ch. Comm 40.

Note: The gas systems addressed in chapter Comm 40 include pressurized vessels and piping for gases that are used for fueling purposes, such as for heating appliances or engines.

SECTION 7. Comm 41.02 Note is created to read:

Comm 41.02 Note: See chapters Comm 10 and 14 for related Departmental requirements for storage and transportation of flammable, combustible and hazardous liquids. See chapter Comm 43 for related Departmental requirements for anhydrous ammonia.

SECTION 8. Comm 41.03 is repealed and recreated to read:

Comm 41.03 Application. (1) RETROACTIVITY. (a) A design, construction or installation rule of this chapter, including the applied criteria from the standards adopted in s. Comm 41.10, does not apply retroactively to boilers, pressure vessels, power piping, solid-fuel-fired water-heating appliances, and their components, that are existing prior to the effective date of the rule unless specifically stated in the rule or standard.

(b) The operation, testing, maintenance and inspection requirements of this chapter apply to all boilers, pressure vessels, power piping, solid-fuel-fired water-heating appliances, and their components, that exist on or after [the effective date of this rule…LEGISLATIVE REFERENCE BUREAU INSERTS DATE].

(c) The design, construction and installation requirements of this chapter apply to any alterations, repairs, and replacement parts or components for all boilers, pressure vessels, power piping, solid-fuel-fired water-heating appliances, and their components, that exist on or after [the effective date of this rule…LEGISLATIVE REFERENCE BUREAU INSERTS DATE].

Note: A proposed alteration for an existing boiler, pressure vessel or power piping may necessitate modifying other components in order to make the proposed alteration comply with this chapter – and some alterations may necessitate modifying other features of a building, such as an automatic fire sprinkler system, that must comply with requirements in chapters Comm 61 to 66, the Wisconsin Commercial Building Code.

(2) DIFFERING RULES. (a) Where any department-written rule in this chapter differs from a requirement within a standard referenced in this chapter, the department-written rule shall govern.

(b) Where a provision of this chapter prescribes a general requirement and another provision of this chapter prescribes a specific or more detailed requirement regarding the same subject, the specific or more detailed requirement shall govern, except as provided in par. (a).

(c) Where different sections of this chapter specify conflicting requirements, the most restrictive requirement, as determined by the department, shall govern, except as provided in pars. (a) and (b).

(3) EXCLUSIONS. This chapter does not nullify any exclusions specified in the standards adopted under s. Comm 41.10.

(4) INTERPRETATIONS. Under s. 101.02 (1), Stats., the department reserves the right to interpret the requirements in this chapter and in all adopted codes and standards.

Note: Section 101.02 (1) of the Statutes reads as follows: "The department shall adopt reasonable and proper rules and regulations relative to the exercise of its powers and authorities and proper rules to govern its proceedings and to regulate the mode and manner of all investigations and hearings."

(5) LOCAL REQUIREMENTS**.** This chapter does not limit the power of cities, villages and towns to make or enforce additional or more stringent requirements, provided the requirements do not conflict with this chapter, any other rule of the department, or law.

SECTION 9. Comm 41.04 (intro.) is amended to read:

Comm 41.04 Definitions. ~~The definitions contained in this section shall be applicable throughout~~ In this chapter~~.~~:

SECTION 10. Comm 41.04 (1) is amended to read:

Comm 41.04 (1) (a) "Alteration," ~~means a change in~~ for a boiler or pressure vessel, ~~that substantially alters the original design and that requires consideration of the effect of the change on the original design. Alteration does not include the addition to a boiler or pressure vessel of nozzles smaller than an unreinforced opening size~~ has the meaning given in NBIC part 3 section 9.1.

(b) "Alteration," for power piping or a solid-fuel-fired water-heating appliance, means a change that involves an extension or addition for, or involves the arrangement, type or purpose of, the existing installation or component.

SECTION 11. Comm 41.04 (2) Note is created to read:

Comm 41.04 (2) Note: The Department will ordinarily accept items approved by a nationally recognized testing laboratory.

SECTION 12. Comm 41.04 (4) is created to read:

Comm 41.04 (4) "Authorized agent" means any of the following or their authorized representatives:

(a) A certified inspector who is addressed in a written contract with the department as enforcing this chapter.

(b) A first class city that has accepted the responsibility to administer and enforce this chapter.

Note: As of [the effective date of this rule…LEGISLATIVE REFERENCE BUREAU INSERTS DATE] only the City of Milwaukee had accepted the responsibility to administer and enforce this chapter.

SECTION 13. Comm 41.04 (6) and (7) are amended to read:

Comm 41.04 (6) "Boiler external piping" means piping that is within the scope of section I of the ASME code ~~section I~~ and ~~which requires~~ is required by section I to have ASME code symbol stamping ~~as specified in section I~~.

(7) "Certified inspector" means a person who holds a valid credential issued by the department under ch. Comm 5 as a certified boiler-pressure vessel inspector or a certified in-service field inspector.

SECTION 14. In each of the following sections, change "which" to "that:" Comm 41.04 (8), 41.16 (2) (b) 3., 41.18 (1) (a) and (k), 41.19 (2) (a), 41.34 (2) (c), 41.35, 41.37 (2), 41.41 (2) (b) 3., 41.55 (1), and 41.74.

SECTION 15. Comm 41.04 (11) is repealed.

SECTION 16. Comm 41.04 (12) is renumbered Comm 41.04 (11).

SECTION 17. Comm 41.04 (12) is created to read:

Comm 41.04 (12) "First class city" means a city established with that class under s. 62.05, Stats.

Note: As of [the effective date of this rule…LEGISLATIVE REFERENCE BUREAU INSERTS DATE] only the City of Milwaukee had become a first class city.

SECTION 18. Comm 41.04 (13) is renumbered Comm 41.04 (40) and amended to read:

Comm 41.04 (40) "~~Fusion welding~~ Welding" means the melting together of filler metal and base metal, or of base metal only, ~~which~~ that results in coalescence.

SECTION 19. Comm 41.04 (14) to (18) are renumbered Comm 41.04 (13) to (17).

SECTION 20. Comm 41.04 (19) is repealed.

SECTION 21. Comm 41.04 (20) to (24) are renumbered Comm 41.04 (18) to (22), and Comm 41.04 (19), (21) and (22), as renumbered, are amended to read:

Comm 41.04 (19) "Low-pressure steam boiler" means a boiler on which the safety valves are set at pressures not exceeding 15 psig.

(21) "Miniature boiler" means a power boiler or high temperature water boiler ~~which~~ that does not exceed any of the following limits:

(a) ~~16 inches inside~~ Inside shell diameter of 16 inches ~~shell;~~.

(b) ~~20 square feet of heating~~ Heating surface of 20 square feet, except for electric boilers~~;~~.

(c) ~~5 cubic feet gross~~ Gross volume of 5 cubic feet, exclusive of casing and insulation~~; and~~.

(d) ~~100 psig maximum~~ Maximum allowable working pressure of 100 psig.

(22) "National ~~board~~ Board" means the ~~national board~~ National Board of ~~boiler~~ Boiler and ~~pressure vessel inspectors~~ Pressure Vessel Inspectors.

SECTION 22. Wherever the phrase "low pressure" occurs in chapter Comm 41, insert a hyphen after "low."

SECTION 23. Comm 41.04 (23) is created to read:

Comm 41.04 (23) "NRC" means the United States nuclear regulatory commission.

SECTION 24. Comm 41.04 (25) to (29) are renumbered Comm 41.04 (24) to (28), and Comm 41.04 (24) and (28), as renumbered, are amended to read:

Comm 41.04 (24) "Owner or user" means any person, firm or corporation legally responsible for the safe operation of a boiler or pressure vessel, power piping or a solid-fuel-fired water-heating appliance.

(28) "Power piping" means any steam piping system beyond the scope of section I of the ASME code ~~section I~~ and having a maximum allowable working pressure in excess of 15 psig, any hot water piping system beyond the scope of section I of the ASME code ~~section I~~ and subject to temperatures in excess of 250°-F, or any piping system using an organic thermal fluid as a heat transfer media and subject to temperatures in excess of 250°-F

SECTION 25. Comm 41.04 (30) is repealed.

SECTION 26. Comm 41.04 (31) to (39) are renumbered Comm 41.04 (29) to (37), and Comm 41.04 (29), (31), (32) and (37), as renumbered, are amended to read:

Comm 41.04 (29) "Pressure vessel" means a container for the containment of ~~internal or external~~ pressure, either internal or external. ~~which~~ This pressure may be obtained from an external source or by the application of heat from a direct or indirect source, or any combination thereof.

(31) "Relief valve" means an automatic pressure relieving device actuated by the static pressure upstream of the valve, ~~which~~ that opens further with the increase in pressure over the opening pressure.

(32) "Repair" means work and materials necessary to restore a boiler, ~~or~~ pressure vessel, power piping or solid-fuel-fired water-heating appliance to a safe operating condition.

(37) "Solid-fuel-fired water-heating appliance" means atmospherically vented equipment used to heat water by burning solid fuels, for the purpose of providing space or process heat.

SECTION 27. Comm 41.04 (38) is created to read:

Comm 41.04 (38) "Uniform dwelling code" or "UDC" means chs. Comm 20 to 25.

SECTION 28. Comm 41.04 (40) is renumbered Comm 41.04 (39).

SECTION 29. Comm 41.05 and Notes and 41.06 are amended to read:

Comm 41.05 Petition for variance. The department shall consider and may grant a variance to a provision of this chapter in accordance with ch. Comm 3. The petition for variance shall include, where applicable, a position statement from the fire department having jurisdiction, and from any first class city having jurisdiction to enforce this chapter.

Note: Chapter Comm 3 requires the submittal of a petition for variance form (SBD-9890X) and a fee, and that an equivalency is established in the petition for variance ~~that~~ which meets the intent of the rule being petitioned. Chapter Comm 3 also requires the department to process regular petitions within 30 business days and priority petitions within 10 business days.

Note: The Department ~~form SBD-9890 is~~ forms required in this chapter are available for a nominal fee at telephone 800-DOC-SALES or Contact Through Relay, or at docsales@doa.state.wi.us, or at no charge ~~from the department~~ at the ~~Safety and Buildings Division, P.O. Box 2509, Madison, WI 53701, telephone 608/267-9706, or on the Internet~~ Department's Web site at ~~www.commerce.wi.gov/SB~~ www.commerce.wi.gov, through links to Safety and Buildings Division forms.

41.06 Penalties. Penalties for violations of this chapter shall be assessed in accordance with s. 101.02 (12) and (13) (a), Stats.

SECTION 30. Comm 41.07 (1) and (2) are renumbered Comm 41.07 (2) and (3), and Comm 41.07 (2), as renumbered, is amended to read:

Comm 41.07 (2) APPEAL OF LOCAL ORDER. ~~Any~~ Pursuant to s. 101.02 (7) (b), Stats., any person affected by a local order ~~which may be~~ that is in conflict with ~~a rule~~ an order of the department may petition the department for a hearing on the ~~grounds that the~~ local order ~~is unreasonable and in conflict with the rule of the department~~.

SECTION 31. Comm 41.07 (1) is created to read:

Comm 41.07 (1) APPEAL OF DEPARTMENT ORDER. Pursuant to s. 101.02 (6) (e), Stats., any person who owns or occupies a property that is affected by an order of the department may petition the department for a hearing on the reasonableness of the order.

SECTION 32. Comm 41.08 is amended to read:

Comm 41.08 Fees. ~~**(1)**~~ Fees for ~~the inspection, certificate of operation~~ inspections and other services performed by the department ~~pertaining to boilers and pressure vessels~~ shall be submitted to the department as specified in ch. Comm 2. ~~The owner shall be responsible for the payment of fees.~~

~~**(2)** Fees for inspections of solid fuel-fired water-heating appliance performed by the department shall be charged in accordance with s. Comm 2.04.~~

Note: A first class city may charge the same or other fees for their services. Service contractors who are authorized agents of the Department charge fees that are established in a contract with the Department.

SECTION 33. Comm 41.09 is created to read:

Comm 41.09 Enforcement. (1) This chapter shall be enforced by the department and its authorized agents, except as provided in s. Comm 41.16 (1) (b) 2. and (3) (b) for one- and 2-family dwellings.

(2) Where a first class city administers and enforces this chapter, a regulated item or activity shall be directed to or addressed by the city before requesting input from the department.

Note: Under section Comm 41.03 (4), the Department reserves the right to interpret the requirements in this chapter and in all codes and standards adopted herein.

(3) An insurance company may provide the inspection services specified in this chapter, in lieu of those services being provided by the department or an authorized agent, only if the company meets all of the following conditions:

(a) It is authorized by this state to provide boiler and machinery insurance.

(b) It is actively engaged in writing boiler and machinery insurance for the general public.

(c) It uses only certified inspectors to perform the inspections.

SECTION 34. Comm 41.10 (1) and (2) (title) are repealed.

SECTION 35. Comm 41.10 (1) Notes and (2) (intro.) to (c) are renumbered Comm 41.10 Notes and Comm 41.10 (intro.), (2), (3) and (1), and Comm 41.10, as renumbered, is amended to read:

Comm 41.10 Adoption of standards by reference. The following standards, as produced by each listed organization, are hereby incorporated by reference into this chapter, subject to the modifications specified in this chapter:

(1) American Petroleum Institute, 1220 L Street, Northwest, Washington, D.C. 20005, telephone 202/682-~~8375~~ 8000, www.api.org. Pressure Vessel Inspection Code, API 510, 9th edition, June 2006.

(2) American Society of Mechanical Engineers (ASME), Order Department, P.O. Box ~~2300~~ 2900, Fairfield, NJ 07007-~~2300~~ 2900, telephone 800/843-2763 ~~Ext. 555~~, www.asme.org.

(a) ASME *Boiler and Pressure Vessel Code*, ~~2007~~ 2010 edition~~,~~: Section I – Rules for Construction of Power Boilers, Section II – ~~Material Specifications~~ Materials, ~~Section III – Nuclear Power Plant Components,~~ Section IV – Rules for Construction of Heating Boilers, Section V – Nondestructive Examination, Section VIII – Rules for Construction of Pressure Vessels, Section IX – Welding and Brazing Qualifications, and Section X – Fiber-Reinforced Plastic Pressure Vessels~~, Section XI - In- Service Inspection of Nuclear Power Plant Components~~.

Note: Section VI of the ASME ~~section VI~~ code, Recommended Rules for the Care and Operation of Heating Boilers and section VII of the ASME ~~VII~~ code, Recommended Guidelines for the Care of Power Boilers may be used as ~~a~~ reference ~~guide~~ guides.

(b) *Power Piping*, ~~ANSI/~~ASME B31.1 – ~~2007~~ 2010.

(c) *Safety Standard for Pressure Vessels for Human Occupancy*, ~~ANSI/~~ASME PVHO-1–~~2002~~ 2007.

(3) National Board of Boiler and Pressure Vessel Inspectors, 1055 Crupper Avenue, Columbus, OH 43229-1183, telephone 614/888-8320, www.nationalboard.org. *National Board Inspection Code~~,~~* (NBIC), ANSI/NB-23, ~~Part 2 section 2.5.8 and section 6-Supplement 2, and Part 3, 2007~~ 2011 edition.

Note: See section Comm 41.11 (1) for modifications of the NBIC.

Note: Copies of the listed standards are on file in the offices of the department~~, the secretary of state~~ and the legislative reference bureau. Copies for personal use may be obtained, at a cost, from the organizations listed.

SECTION 36. Comm 41.10 (2) (d) and (e) and (4) are created to read:

Comm 41.10 (2) (d) *Safety Standard for Pressure Vessels for Human Occupancy: In-Service Guidelines for PVHO Acrylic Windows*, ASME PVHO-2–2003.

(e) *Controls and Safety Devices for Automatically Fired Boilers*, ASME CSD-1–2009.

Note: See section Comm 41.11 (2) for modifications of ASME CSD-1.

(4) National Fire Protection Association®, 1 Batterymarch Park, Quincy, MA 02169-7471, telephone 800-344-3555. *Compressed Gases and Cryogenic Fluids Code*, NFPA® 55, 2010 edition.

SECTION 37. Wherever the phrase "automatically-fired" occurs in chapter Comm 41, delete the hyphen.

SECTION 38. Comm 41.11 is created to read:

Comm 41.11 Application of standards. (1) NBIC OMISSIONS. The requirements in the following portions of the NBIC are not included as part of this chapter:

(a) In part 1 – sections 1, 2.4.1, 2.5.4, 2.10.2, 2.10.6, 3.2.3, 3.4.1, 3.5.3, 3.5.4, 3.7.5.2, 3.7.7.2, 3.7.9.2, 3.8.3, 3.9.4, 3.10, and 5; Figures 3.7.5-d and 3.5.7-e; and Table 3.7.9.2.

(b) In part 2 – sections 1.1, 1.2, 1.3, 1.4, 1.4.1, 2.2.12.5, 2.2.12.6, 2.3.5.4, 2.3.6.4, 2.4, 2.5.3, 5.3 and supplement 6.

(c) In parts 1 and 2 – any reference to using an NBIC form.

(2) MODIFICATIONS OF ASME CSD-1. (a) *Sections CG-120 and CG-140*. ASME CSD-1 does not apply to boilers and burner assemblies with fuel input ratings of less than 400,000 Btu per hour.

(b) *Shutdown switch.* The requirement in ASME CSD-1 section CE-110 (a) to locate a shutdown switch or circuit breaker just outside the boiler room door is changed to include an alternative of locating the switch or breaker just inside the principal entrance into the room, where approved by the department or authorized agent.

(3) SECONDARY REFERENCES. Any codes or standards referenced in the standards adopted in s. Comm 41.10 shall apply to the prescribed extent of each such reference, except as modified by this chapter.

(4) ALTERNATE STANDARDS. Any alternate standard that is equivalent to or more stringent than a standard incorporated by reference or otherwise referenced under this chapter may be used in lieu of the incorporated or referenced standard if the alternate standard is accepted in writing by the department.

SECTION 39. Comm 41.15 (1) (intro.) and (a) are amended to read:

Comm 41.15 (1) (intro.) ALL INSPECTIONS. ~~The certified~~ Certified inspectors ~~of the department~~, upon presenting appropriate credentials to the owner~~, operator,~~ or ~~agent in charge~~ user, may do any of the following:

(a) Enter without delay and at reasonable times any factory, plant, establishment, construction site, or other area, workplace or environment where work is performed by an employee ~~of an employer; and~~.

SECTION 40. Comm 41.15 (1) Note is created to read:

Comm 41.15 (1) Note: Section 101.02 (15) (g) of the Statutes authorizes the Department and its deputies to "enter any place of employment or public building, for the purpose of collecting facts and statistics, examining the provisions made for the health, safety and welfare of the employees, frequenters, the public or tenants therein and bringing to the attention of every employer or owner any law, or any order of the department, and any failure on the part of such employer or owner to comply therewith."

SECTION 41. Comm 41.15 (3) is amended to read:

Comm 41.15 (3) REPORTING CHANGES. (a) The certified inspector's employer shall report to the department not later than 30 calendar days after inspection service is started or discontinued on a boiler or pressure vessel. The reason for discontinuing the service shall be given on the report. If the boiler or pressure vessel is installed in a ~~city of the~~ first class city that provides boiler and pressure vessel inspections, the report shall also be provided to the city.

(b) The certified inspector's employer shall report to the department after a boiler or pressure vessel under a service contract becomes inactive or non-existent. Failure to make this report may result in assessment of a fee in accordance with ~~s.~~ ch. Comm ~~2.04~~ 2.

SECTION 42. Comm 41.15 (4) is created to read:

Comm 41.15 (4) COMPLIANCE RESPONSIBILITIES. (a) 1. Any inspection report describing any noncompliance with this chapter shall be provided to the owner or user within 5 business days after completing the inspection.

2. A copy of the inspection report shall be left on site if a life-safety violation is indicated.

(b) The owner or user shall correct any aspects that do not comply with applicable requirements of this chapter, within any time period prescribed by the certified inspector or the department.

SECTION 43. Comm 41.16 (title) is amended to read:

Comm 41.16 (title) ~~**Initial**~~ **Installation inspections.**

SECTION 44. Comm 41.16 (1) (a) is renumbered Comm 41.16 (1) (a) 1.

SECTION 45. Comm 41.16 (1) (a) 2. is created to read:

Comm 41.16 (1) (a) 2. Inspections under this subsection shall be conducted in accordance with the NBIC and ASME CSD-1.

SECTION 46. Comm 41.16 (1) (b) 2., (c) and (e) and Note; (2) (a), (d) and Note and (e) and Note and (3) (title) and (a) are amended to read:

Comm 41.16 (1) (b) 2. ~~Initial~~ Installation inspections for boilers and pressure vessels installed at one- and 2-family dwellings shall be performed by the municipality in accordance with local ordinances or by the registered Uniform Dwelling Code (UDC) inspection agency administering and enforcing the UDC.

(c) Where the boilers or pressure vessels specified in par. (a) are installed in a ~~city of the~~ first class city and inspections are made by the city, the city shall keep a record of the inspections and shall submit a copy to the department.

(e) 1. ~~Required initial~~ Except as provided in subd. 2., reports of required installation inspections shall be ~~reported~~ sent to the department ~~on form SBD-10633 or other approved forms~~ in accordance with the department's electronic data interchange transfer guidelines.

Note: The Department will provide assistance at no charge regarding the use of the electronic data interchange system. The guidelines are available on the Internet at http://commerce.wi.gov/SB/docs/SB-BoilerEdiGuidelines.pdf.

2. a. The department's 10663-E inspection form may be used in lieu of the electronic data interchange system where approved in advance by the department.

Note: ~~Copies of department form SBD-10633~~ The Department forms required in this chapter are available for a nominal fee at telephone 800-DOC-SALES or Contact Through Relay, or at docsales@doa.state.wi.us, or at no charge ~~from the department~~ at the ~~Safety and Buildings Division, P.O. Box 2509, Madison, WI 53701, telephone 608/267-9706, or on the Internet~~ Department's Web site at ~~www.commerce.wi.gov/SB~~ www.commerce.wi.gov, through links to Safety and Buildings Division forms.

b. No reports to the department are required for the inspections performed under par. (b) 2.

(2) (a) Except as provided in par. (b), all power piping systems not covered by ASME code section I and required to be constructed in accordance with ~~ANSI~~/ASME B31.1, shall receive an ~~initial~~ installation inspection by a certified inspector.

(d) A power piping inspection shall be made after the piping material is delivered to the job site and prior to the start of construction of the power piping system. The installer or an in-state shop fabricator shall complete department form SBD-5204-E ~~and retain it at the job site~~ prior to the ~~power piping~~ inspection, and the form shall be retained at the job site for reference during the inspection. The certified inspector shall indicate acceptance of the power piping system design and installation by signing form SBD-5204-E. Power piping systems may not be insulated or placed in service without receiving ~~an inspection~~ that acceptance.

Note: ~~Copies of form SBD-5204~~ The Department forms required in this chapter are available for a nominal fee at telephone 800-DOC-SALES or Contact Through Relay, or at docsales@doa.state.wi.us, or at no charge ~~from the Safety and Buildings Division, P.O. Box 2509, Madison, WI 53701-2509, telephone 608/266-1818~~ at the Department's Web site at www.commerce.wi.gov, through links to Safety and Buildings Division forms.

(e) Prefabricated piping that is part of a power piping system shall be inspected at the fabrication shop by a certified inspector or an active National Board commissioned inspector for out-of-state manufacturers ~~at the fabrication shop~~. The shop fabricator shall provide a copy of the certified inspector's report or a copy of the completed department form SBD-5204-E to the installer at the job site verifying that the prefabricated piping complies with ~~ANSI/~~ASME B31.1. The owner or installer shall provide design calculations ~~of~~ for the prefabricated piping if requested by an inspector.

Note: ~~Department form SBD-5204 is~~ The Department forms required in this chapter are available for a nominal fee at telephone 800-DOC-SALES or Contact Through Relay, or at docsales@doa.state.wi.us, or at no charge ~~from the department~~ at the ~~Safety and Buildings Division, P.O. Box 2509, Madison, WI 53701, telephone 608/267-9706, or on the Internet~~ Department's Web site at ~~www.commerce.wi.gov/SB~~ www.commerce.wi.gov, through links to Safety and Buildings Division forms.

(3) (title) ~~INITIAL~~ INSTALLATION INSPECTION OF SOLID-FUEL-FIRED WATER-HEATING APPLIANCES.

(a) Except as specified in par. (b), the installation of a solid-fuel-fired water-heating appliance shall be inspected by the department ~~for compliance with this section~~ or authorized agent before the appliance is placed in operation.

SECTION 47. Comm 41.16 (2) (f) and (g) are repealed.

SECTION 48. Comm 41.16 (3) Note is created to read:

Comm 41.16 (3) Note: Under section Comm 41.15, certified inspectors may conduct whatever number of inspections are needed in addition to the inspections required in this section, to verify compliance with this chapter. Also, owners or users may request additional inspections beyond the number established by the certified inspector.

SECTION 49. Wherever the phrase "hot water heating boiler" occurs in chapter Comm 41, insert a hyphen after "hot."

SECTION 50. Wherever the phrase “hot water supply boiler” occurs in chapter Comm 41, insert a hyphen after “hot.”

SECTION 51. Wherever the phrase “hot water storage tank” occurs in chapter Comm 41, insert a hyphen after “hot.”

SECTION 52. Comm 41.17 (1) (title) and (a) and (4) are amended to read:

Comm 41.17 (1) INSPECTION OF POWER BOILERS, MINIATURE BOILERS AND ORGANIC FLUID HEAT TRANSFER BOILERS**.** (a) Except as provided in s. Comm 41.18, power boilers, miniature boilers and organic fluid heat transfer boilers shall be subjected to either a regular internal or external inspection at least once every 12 months by a certified inspector.

(4) INSPECTION OF SAFETY VALVES AND SAFETY RELIEF VALVES. The certified inspectors shall determine that safety valves and safety relief valves have been operated or tested at least once every 12 months or an owner or user may provide proof that testing is in compliance with ~~the~~ NBIC ~~Part~~ part 2 section 2.5.8 relating to testing of safety relief valves.

Note: See chapters Comm 81 to 87, Plumbing, for requirements relating to combination temperature and pressure relief valves.

SECTION 53. Comm 41.17 (5) is renumbered Comm 41.17 (6).

SECTION 54. Comm 41.17 (5) and (7) are created to read:

Comm 41.17 (5) INSPECTION OF RUPTURE DISKS. Except as provided in s. Comm 41.18, rupture disks shall be subjected to a visual inspection at least once every 36 months by a certified inspector.

(7) INSPECTION STANDARDS. Inspections under this section shall be conducted in accordance with the NBIC and ASME CSD-1.

SECTION 55. Comm 41.18 (1) (o) is amended to read:

Comm 41.18 (1) (o) Installations at one- or 2-family ~~dwelling units~~ dwellings.

SECTION 56. Comm 41.19 (1) is amended to read:

Comm 41.19 (1) GENERAL REQUIREMENTS. The owner or user of a boiler or a pressure vessel subject to inspection shall prepare the vessel for internal inspection after due

notice from the certified inspector. To prepare a vessel for an internal inspection, all manhole plates, all wash-out plugs, and a sufficient number of ~~handhole~~ hand hole plates to permit a satisfactory inspection shall be removed. The shell and heads shall be thoroughly cleaned and exposed when so requested. Each steam boiler shall be thoroughly drained of water and all fire-side surfaces cleaned before an internal inspection is made.

SECTION 57. Comm 41.23 (1) and (2) (a) are repealed and recreated to read:

Comm 41.23 (1) REPORTING PROCESSING TIME. (a) Except as provided in par. (b) and s. Comm 41.55 (4), reports of periodic internal or external inspections of boilers and pressure vessels shall be sent to the department in accordance with the department's electronic data interchange transfer guidelines, within 5 business days after completing the inspection, unless additional time is authorized by the department.

Note: The Department will provide assistance at no charge regarding the use of the electronic data interchange system. The guidelines are available on the Internet at http://commerce.wi.gov/SB/docs/SB-BoilerEdiGuidelines.pdf.

(b) The department's 10663-E inspection form may be used in lieu of the electronic data interchange system where approved in advance by the department.

Note: The Department forms required in this chapter are available for a nominal fee at telephone 800-DOC-SALES or Contact Through Relay, or at docsales@doa.state.wi.us, or at no charge at the Department's Web site at www.commerce.wi.gov, through links to Safety and Buildings Division forms.

(2) (a) A verification that a periodic inspection has been performed shall be posted on or near the inspected item.

SECTION 58. Comm 41.23 (3) (a) is amended to read:

Comm 41.23 (3) (a) An internal inspection is not possible because of the construction of the vessel. In these cases the external inspection shall be reported to the department in the same manner as an internal inspection. The report shall be marked external, and the reason for making an external inspection instead of an internal shall be given~~; or~~.

SECTION 59. Comm 41.24 (1) (a) 2. and (2) are amended to read:

Comm 41.24 (1) (a) 1. An owner or user of a boiler or pressure vessel installed at a one- or 2-family dwelling ~~unit~~ is not required to apply for a permit to operate as specified in this section.

(2) ISSUANCE. After each ~~initial~~ installation or periodic inspection for boilers and pressure vessels found to be in compliance with this chapter, a permit to operate shall be issued by the department to the owner or user of the boiler or pressure vessel. The department shall issue the permit within 30 business days of determination of compliance.

SECTION 60. Comm 41.27 is amended to read:

Comm 41.27 Application. Except as specified under s. Comm 41.29 (2), ~~the provisions of ss. Comm 41.27 to 41.39 shall apply~~ this subchapter applies to all boilers and pressure vessels existing ~~prior to,~~ or installed on or after ~~March 1, 1988~~ [the effective date of this rule . . . LEGISLATIVE REFERENCE BUREAU INSERTS DATE].

SECTION 61. Comm 41.28 (3) is amended to read:

Comm 41.28 (3) (a) Except as specified in par. (b), boilers and pressure vessels shall be installed in accordance with the manufacturer's installation specifications~~:~~.

(b) Clearances shall be maintained around boilers, generators, heaters, tanks and related equipment and appliances to permit inspection, servicing, repair, replacement and visibility of all ~~gauges~~ gages. When boilers are installed or replaced, clearance shall be provided to allow access for inspection, maintenance and repair. Passageways around all sides of boilers shall have an unobstructed width of not less than 18 inches unless otherwise approved by the department or authorized agent.

SECTION 62. Comm 41.28 (3) (b) Notes are renumbered Comm 41.02 (1) (a) Notes and amended to read:

Comm 41.02 (1) (a) **Note:** The Wisconsin Commercial Building Code (WCBC), chapters Comm ~~60~~ 61 to 66, likewise applies this chapter to the installation, alteration and repair of boilers and pressure vessels in public buildings and places of employment. The WCBC may have other requirements relating to the installation, alteration or repair of a boiler or pressure vessel, such as requirements relating to enclosures, location, safety controls, combustion air, and venting. The *International Mechanical Code*® (IMC) as adopted by reference under the WCBC contains requirements relating to hydronic piping.

Note: Wisconsin Administrative Codes are available at http://legis.wisconsin.gov/rsb/code/codtoc.html. Official copies may be obtained ~~by contacting~~ for a nominal fee at the ~~State~~ Department of Administration, Document Sales and Distribution, P.O. Box 7840, Madison, Wisconsin 53707, telephone ~~608/266-3358, or on the Internet at www.legis.state.wi.us/rsb/code/~~ 800-DOC-SALES or Contact Through Relay, or at docsales@doa.state.wi.us.

SECTION 63. Comm 41.29 (1) is amended to read:

Comm 41.29 (1) GENERAL. Oil-fired, gas-fired and ~~electrically-heated~~ electrically heated boilers shall be equipped with primary safety controls, safety limit switches, and burners or electric elements that bear the stamp, monogram or other evidence of compliance with a nationally recognized standard.

SECTION 64. Comm 41.29 (2) (b) 2. e. is created to read:

Comm 41.29 (2) (b) 2. e. No shut-off valve of any type may be placed in the piping between a boiler and its high-temperature-limit control device.

SECTION 65. Comm 41.30 (1) (a) and (c) and (2) are amended to read:

Comm 41.30 (1) (a) Every automatically fired power boiler ~~which~~ that does not have a full-time attendant and every automatically fired low-pressure steam boiler shall be equipped with an automatic low-water fuel cutoff or other device which will perform a similar function, so located as to automatically cut off the fuel supply when the surface of the water falls to the lowest safe water line.

(c) Boilers ~~which~~ that are manually fired and have a residual heat source shall have a fusible plug installed which will extinguish the fire in the event of low water. Fire doors shall be provided with secure latches on manually fired boilers having fusible plugs.

(2) BOWL DESIGNS. Designs embodying a float and float bowl, or probe control installed in a bowl or chamber ~~externally~~ external to the boiler, shall have a vertical, ~~straightway~~ straight-run, valved drain pipe at the lowest point in the water-equalizing pipe connections, by which the bowl or chamber and the equalizing pipe can be flushed and the device tested.

SECTION 66. Comm 41.31 (1) (b), (2) and (4) (intro.) to (d) are amended to read:

Comm 41.31 (1) (b) The pressure of the blowdown leaving the blowoff equipment may not exceed 5 ~~psi~~ psig.

(2) PIPING AND FITTINGS. The blowoff piping and fittings between the boiler and the blowoff tank shall comply with ~~ANSI/~~ASME B31.1 or the code in effect at the time of construction.

(4) GENERAL REQUIREMENTS. All blowoff equipment, except centrifugal blowdown separators, shall be fitted with openings to facilitate cleaning and inspection and shall have all of the following:

(a) A pressure gage graduated from 0-50 psi~~;~~.

(b) A thermometer well located near the water outlet connection and in contact with the retained water in the tank~~;~~.

(c) A ~~gauge~~ gage glass at least ~~½-inch~~ ½ inch in diameter with the lower connection to the glass at a point about 6 inches below the water line and the upper connection at a point about 6 inches above the water line~~;~~.

(d) A drain connection of at least 2-inch standard pipe size~~; and~~.

SECTION 67. Comm 41.32 (2) is amended to read:

Comm 41.32 (2) GAGE DIAL. The dial of the pressure gage shall be graduated to approximately double the pressure at which the safety valve is set, but may not be less than ~~one and one-half~~ 1½ times that pressure.

SECTION 68. Wherever the phrase "pressure reducing" occurs in chapter Comm 41, insert a hyphen after "pressure."

SECTION 69. Comm 41.33 (intro.) to (3) are renumbered Comm 41.33 (1), (2) (a) to (c), (3) and (4), and Comm 41.33 (1), (2) (title) and (b) and (4), as renumbered, are amended to read:

Comm 41.33 (1) SIZING SAFETY VALVES. The ~~following~~ requirements in this section shall be used for determining the sizes of safety valves on pressure vessels such as~~, but not limited to~~ pressure cookers, indirect hot water heaters and equipment in heating systems, ~~which~~ that are supplied through pressure-reducing stations from boilers carrying a higher steam pressure. Where a pressure-reducing station is supplied from a boiler, the capacity of the safety valves on the low-pressure side of the system need not exceed the capacity of the boiler.

(2) (title) REDUCING-STATION CAPACITY.

(b) The critical flow capacity data supplied by the reducing valve manufacturer may be used in place of the above formula to select the required safety valve capacity. The capacity ~~calculations~~ calculated shall be the largest obtainable by internal trim change of the reducing valve.

(3) BYPASS CAPACITY. The following formula shall be used to determine the steam flow rate through the bypass when pressure-reducing stations are arranged with a valved bypass ~~which~~ that also acts as a potential steam source hazard in case the bypass is left open.

(4) SELECTING SAFETY VALVE. The larger of the steam flow rates calculated by the formulas in subs. ~~(1)~~ (2) and ~~(2)~~ (3) shall be used for selecting the safety valve on the low-pressure side of the system.

SECTION 70. Comm 41.36 is amended to read:

Comm 41.36 Identification of boilers and pressure vessels. ~~**(2)** REGISTRATION NUMBER.~~ Boilers and pressure vessels subject to periodic inspections shall be identified by a registration number supplied by the department. The registration number shall be affixed to the vessel by a certified inspector at a location ~~which~~ that can be easily viewed.

SECTION 71. Comm 41.37 (3) Note is amended to read:

Comm 41.37 (3) Note: See ~~s.~~ section Comm 41.38 for department reporting requirements ~~for~~ relating to fuel conversions and to modifications ~~to fuel conversions or increase in~~ for increasing heat input.

SECTION 72. Comm 41.38 (1) and (4) Note are amended to read:

Comm 41.38 (1) ACCIDENTS. ~~Whenever~~ (a) If a component of a boiler or pressure vessel or power piping fails and causes an injury ~~to any person~~ that needs more than first aid treatment, the owner or user shall ~~do all of the following:~~

~~(a) Notify~~ report the facts involved to the department on form SBD-10787-E ~~during normal business hours or notify the state division of emergency management during non-business hours~~ within ~~the following~~ 24 hours ~~of~~ after the accident.

Note: The Department forms required in this chapter are available for a nominal fee at telephone 800-DOC-SALES or Contact Through Relay, or at docsales@doa.state.wi.us, or at no charge at the Department's Web site at www.commerce.wi.gov, through links to Safety and Buildings Division forms.

~~(b) Shall~~ The owner or user may not remove or disturb the boiler or pressure vessel or power piping or any of ~~its parts and shall not~~ the components nor permit any such removal or disturbance prior to receiving authorization from the department or first class city, except for the purpose of saving human life or preventing further property damage.

(b) Any accidents under par. (a) that occur during the department's non-business hours shall also be reported to the state division of emergency management.

Note: The address for reporting accidents to the Department is the Safety and Buildings Division, Inspection Support Unit, P.O. Box 7302, Madison, WI 53707-7302; and the fax number is 608-283-7499.

Note: The department ~~may~~ can be contacted at ~~(608) 266-7548~~ 262/548-8617 during normal business hours. ~~(7:45 am to 4:30 pm) or the~~ The state division of emergency management ~~may~~ can be contacted at (800) 943-0003 during non-business hours.

Note: The Department forms required in this chapter are available for a nominal fee at telephone 800-DOC-SALES or Contact Through Relay, or at docsales@doa.state.wi.us, or at no charge at the Department's Web site at www.commerce.wi.gov, through links to Safety and Buildings Division forms.

(4) Note: ~~Department form SBD-6314 is~~ The Department forms required in this chapter are available for a nominal fee at telephone 800-DOC-SALES or Contact Through Relay, or at docsales@doa.state.wi.us, or at no charge ~~from the department~~ at the ~~Safety and Buildings Division, P.O. Box 2509, Madison, WI 53701, telephone 608/267-9706, or on the Internet~~ Department's Web site at ~~www.commerce.wi.gov/SB~~ www.commerce.wi.gov, through links to Safety and Buildings Division forms.

SECTION 73. Wherever "SBD–6314" occurs in chapter Comm 41, add "–E" at the end.

SECTION 74. Comm 41.40 is amended to read:

Comm 41.40 Application. ~~The provisions of ss.~~ Sections Comm 41.40 to 41.48 ~~shall~~ apply to all boilers and pressure vessels installed on or after ~~the effective date of this section~~ March 1, 1988.

SECTION 75. Comm 41.41 (1) (a) and Note and (b) (intro.) and 1. and (2) (a) and Note are amended to read:

Comm 41.41 (1) (a) Except as provided in par. (b), the installation of any boiler or pressure vessel shall be registered with the department by the installer before the operation of the boiler or pressure vessel. Registration shall be ~~in writing~~ on form SBD-6314-E.

Note: ~~Copies of form SBD-6314~~ The Department forms required in this chapter are available for a nominal fee at telephone 800-DOC-SALES or Contact Through Relay, or at docsales@doa.state.wi.us, or at no charge ~~from~~ at the ~~Safety and Buildings Division, P.O. Box 2509, Madison, WI 53701-2509, telephone 608/266-1818~~ Department's Web site at www.commerce.wi.gov, through links to Safety and Buildings Division forms.

(b) Registration with the department is not required for any of the following:

1. Boilers and pressure vessels exempted from periodic inspections in s. Comm 41.18~~; and~~.

(2) (a) Except as provided in par. (b), the installation of any power piping system shall be registered with the department by the installer before the operation of the piping system. Registration shall be ~~in writing~~ on form ~~SB-5204~~ SBD-5204-E.

Note: ~~Copies of department form SBD-5204~~ The Department forms required in this chapter are available for a nominal fee at telephone 800-DOC-SALES or Contact Through Relay, or at docsales@doa.state.wi.us, or at no charge ~~from the department~~ at the ~~Safety and Buildings Division, P.O. Box 2509, Madison, WI 53701, telephone 608/267-9706, or on the Internet~~ Department's Web site at ~~www.commerce.wi.gov/SB~~ www.commerce.wi.gov, through links to Safety and Buildings Division forms.

SECTION 76. Comm 41.41 (2) (c) is renumbered Comm 41.41 (2) (b) 5. Note and amended to read:

Comm 41.41 (2) (b) 5. **Note:** ~~The~~ Under section Comm 41.16 (2) (c), the piping installer ~~shall~~ must notify the certified inspector at least 5 business days prior to the ~~start of construction of the power piping system~~ installation to schedule an inspection. ~~The certified inspector shall be given a minimum of 5 business days notice to arrange for an inspection.~~

SECTION 77. Comm 41.41 (4) (b) and Note are amended to read:

Comm 41.41 (4) (b) Registration of a solid-fuel-fired water-heating appliance installed at a one- ~~and~~ or 2-family dwelling is not required.

Note: ~~Copies of department form SBD-6314~~ The Department forms required in this chapter are available for a nominal fee at telephone 800-DOC-SALES or Contact Through Relay, or at docsales@doa.state.wi.us, or at no charge ~~from the department~~ at the ~~Safety and Buildings Division, P.O. Box 2509, Madison, WI 53701, telephone 608/267-9706, or on the Internet~~ Department's Web site at ~~www.commerce.wi.gov/SB~~ www.commerce.wi.gov, through links to Safety and Buildings Division forms.

SECTION 78. Comm 41.42 (1) is amended to read:

Comm 41.42 (1) ASME Code Compliance. Except as provided in ss. Comm 41.43, ~~41.44 and~~ to 41.45 and 41.53 (2), boilers and pressure vessels shall be constructed, ~~and~~ installed, operated and maintained in accordance with the ASME code, ASME CSD-1 and the NBIC. Boilers and pressure vessels designed to other national or international standards may be approved if the design has been accepted by a nationally recognized independent third party or if the standard has been accepted by the department.

Note [1]: Section Comm 41.43 allows construction of boilers and pressure vessels that do not comply with the ASME code, if they comply with criteria in a variance issued by the Department. As referenced in section Comm 41.05, any such variance must comply with chapter Comm 3, which requires establishing an equivalency that meets the intent of the rule.

SECTION 79. Comm 41.42 (1) Note [3] is created to read:

Comm 41.42 (1) **Note:** Design and construction complying Canadian standard CSA B51 is accepted by the Department under this section, and the National Board has accepted the designs that comply with this standard.

SECTION 80. Comm 41.42 (2) (a) and (3) are amended to read:

Comm 41.42 (2) (a) Except as provided in par. (b), all boilers and pressure vessels, ~~shall be~~ including any that are constructed and installed in accordance with ~~the ASME code or the~~ Canadian standard~~,~~ CSA B51, ~~and~~ shall have the manufacturer's data report registered with the National Board and shall bear a National Board number. Copies of the registration shall be provided to the department when requested.

(3) HUMAN OCCUPANCY. (a) Pressure vessels for human occupancy shall be constructed and installed in accordance with ~~ANSI/~~ASME PVHO-1.

(b) Inspection, care, repair, replacement, testing and recertification of PVHO acrylic windows in pressure vessels for human occupancy shall comply with ASME PVHO-2.

SECTION 81. Comm 41.42 (4) is created to read:

Comm 41.42 (4) COMPRESSED GASES AND CRYOGENIC FLUID VESSESLS. In addition to complying with subs. (1) and (2), vessels and piping and other components for

compressed gases and cryogenic fluids, including for gaseous hydrogen and liquefied hydrogen, shall also comply with NFPA 55, except as provided in s. Comm 41.44.

Note: Under section Comm 41.02 (1) (b) 3., pressure vessels and piping for gases that are used for fueling purposes, such as for heating appliances or engines, must comply with chapter Comm 40 instead of this chapter.

SECTION 82. Comm 41.44 is amended to read:

Comm 41.44 U.S. department of transportation vessels. Pressure vessels bearing the stamping of the United States department of transportation are not permitted as permanent storage containers, ~~but~~ except they may be used as replaceable service cylinders ~~and as cylinders for storage of compressed natural gas~~.

SECTION 83. Comm 41.44 Note is repealed.

SECTION 84. Comm 41.45 (1) (a) to (d) and (3) (b) are amended to read:

Comm 41.45 (1) (a) Water heaters and hot-water storage tanks, provided water temperatures do not exceed 210°F~~;~~.

Note: See ch. Comm 84 for requirements relating to water heaters and hot-water storage tanks.

(b) Vessels for containing water under pressure for domestic supply, including those having an air space for expansion~~;~~.

(c) Pressure vessels used for the processing or storage of water at water temperatures not exceeding 210°F. These vessels may contain a steam or hot water coil or heat exchanger, provided the steam is at or below a pressure of 15 psig and the hot water is at or below a pressure of 160 psig and a temperature of 250°F~~;~~.

(d) Pressure vessels used for water conditioning and filtration~~; and~~.

(3) (b) Water heaters and hot-water storage tanks shall be equipped with ~~pressure-~~combination temperature and pressure relief ~~devices~~ valves in accordance with ~~ch.~~ chs. Comm ~~84~~ 81 to 87.

SECTION 85. Comm 41.46 (1) and (2) are amended to read:

Comm 41.46 (1) GENERAL. Power piping shall be installed in accordance with ~~ANSI/~~ASME B31.1. The use of slip-on flanges shall be limited in applications to no higher than Class 300 primary pressure service rating. Slip-on flanges shall be installed with double fillet welds in accordance with ~~ANSI/~~ASME B31.1.

(2) BOILER EXTERNAL PIPING. Boiler external piping within the scope of section I of the ASME code shall be installed in accordance with ~~ANSI/~~ASME B31.1.

SECTION 86. Comm 41.47 (intro.) and (1) to (3) are amended to read:

Comm 41.47 Multi-boiler installations. When hot-water heating boilers are installed in multiples with a common header and a common return, isolation valves may be eliminated between units and the units may be considered as one boiler provided all of the following conditions are met:

(1) OUTPUT LIMIT. No single unit exceeds 500,000 Btu per hour output~~;~~.

(2) PRESSURE RELIEF. Each unit has a pressure relief device as required by the ASME code, or the common header has a pressure relief device with sufficient relieving capacity for all units in the installation~~;~~.

(3) CONTROLS. Each unit has operating controls and safety controls acceptable to the department~~; and~~.

SECTION 87. Comm 41.48 and Note are amended to read:

Comm 41.48 Organic or synthetic fluid heat transfer systems. Boilers and coil-type heaters ~~which~~ that utilize organic or synthetic thermal fluids as a heat transfer media shall be designed, constructed and installed in accordance with the ASME code. Piping for organic or synthetic thermal fluids used as a heat transfer media and subject to temperatures in excess of 250°F shall be installed in accordance with ~~ANSI/~~ASME B31.1.

Note: ~~Copies of department form SBD-6314 are available at no charge from the department at the Safety and Buildings Division, P.O. Box 2509, Madison, WI 53701, telephone 608/267-9706, or on the Internet at www.commerce.wi.gov/SB~~ See sections Comm 41.41 (1) and (2) for requirements relating to registering these installations with the Department.

SECTION 88. Wherever "° F" occurs in chapter Comm 41, delete the space before "F."

SECTION 89. Comm 41.49 (3) (a) and (c) are amended to read:

Comm 41.49 (3) (a) A solid-fuel-fired water-heating appliance shall be located away from ~~other normally occupied~~ occupiable structures in accordance with the manufacturer's recommendation. If provided, a canopy shall be open on all sides~~,~~ and constructed of substantially nonflammable materials, and ~~shall~~ may not fully cover the unit.

(c) ~~Automatically~~ Any automatic fuel-feeding system for a solid-fuel-fired water-heating appliance shall ~~use a fuel feed system~~ be designed or approved by the ~~unit~~ manufacturer of the appliance.

SECTION 90. Comm 41.53 is renumbered Comm 41.53 (1) and amended to read:

Comm 41.53 (1) GENERAL. ~~The provisions of ss. Comm 41.53 to 41.57 shall apply~~ This subchapter applies to all ~~existing~~ nuclear power plants ~~and to all nuclear power plants~~ existing or constructed on or after ~~March 1, 1988~~ [the effective date of this rule . . . LEGISLATIVE REFERENCE BUREAU INSERTS DATE].

SECTION 91. Comm 41.53 (2) and Note are created to read:

Comm 41.53 (2) NRC REQUIREMENTS. Construction, installation, operation, alterations and repairs for nuclear facility components that are regulated by the NRC shall comply with all applicable NRC regulations.

Note: See 10 CFR 50.55a to 50.57 for applicable NRC regulations.

SECTION 92. Comm 41.54 (1) and Note are amended to read:

Comm 41.54 (1) OWNER-REPORT FILING BEFORE OPERATION. The owner or user of any nuclear class pressure vessel within the scope of ~~ASME code section III~~ applicable NRC regulations, except those vessels exempted from periodic inspections in s. Comm 41.18, shall file a copy of ASME form N-3, ~~ASME data report~~ as required by the NRC, with the department before operating the pressure vessel.

Note: Form N-3, Owner's Data Report for Nuclear Power Plant Components, is available from the American Society of Mechanical Engineers (ASME), at P.O. Box 2300, Fairfield, NJ 07007-2300, or telephone 800/843-2763 ~~extension 555~~, or www.asme.org.

SECTION 93. Comm 41.55 (1) is renumbered Comm 41.55 (1) (a) and amended to read:

Comm 41.55 (1) (a) The owner or user shall file with the department an in-service inspection plan as required by ~~section XI of the ASME code~~ the NRC. The department shall be notified at least 10 business days prior to all planned shutdowns which include in-service inspections.

SECTION 94. Comm 41.55 (1) (a) (title) and (b) are created to read:

Comm 41.55 (1) (a) (title) *Inspection plan.*

(b) *Code of record*. In-service inspections shall comply with all applicable NRC regulations.

Note: Under 10 CFR 50.55a(g)(4), in-service inspections conducted during successive 120-month inspection intervals generally must comply with the requirements of Section XI of the latest edition and addenda of the ASME Code that were incorporated by reference in 10 CFR 50.55a 12 months before the start of the 120-month inspection interval.

SECTION 95. Comm 41.55 (2) is amended to read:

Comm 41.55 (2) STATEMENT OF INSPECTION-SERVICE CONTRACT. The owner or user shall file a statement with the department indicating possession of an arrangement with a certified inspector to provide inspection services under ~~section XI of the ASME code~~ applicable NRC regulations. The statement shall include the name and address of the certified inspector.

SECTION 96. Comm 41.55 (3) (a) (title) and (b) are repealed.

SECTION 97. Comm 41.55 (3) (a) is renumbered Comm 41.55 (3) and amended to read:

(3) IN-SERVICE INSPECTION REPORT. ~~Except as specified in par. (b), within~~ Within 90 calendar days after each refueling outage, the owner or user shall submit to the department a copy of ~~form NIS-1, owner's data report for~~ the in-service inspection~~, describing the inspections performed under section XI of the ASME code~~ form accepted by the NRC.

SECTION 98. Comm 41.55 (3) Note and (4) are amended to read:

Comm 41.55 (3) Note: ~~Forms~~ The in-service inspection forms accepted by the NRC include NIS-1, Owner's Report for Inservice Inspections; and OAR-1, Owner's Activity Report ~~and NIS-2A~~. They are available at http://bpvinspector.com/Section_XI/Section_XI.htm and may be available from the American Society of Mechanical Engineers (ASME) at P.O. Box 2300, Fairfield, NJ 07007-2300, or telephone 800/843-2763, or www.asme.org. ~~See s. Comm 41.10 for ASME address and contact information.~~

(4) FREQUENCY OF INSPECTION. (a) Pressure vessels and low-pressure steam or hot-water heating boilers located within a nuclear containment may be inspected as part of the in-service inspection. ~~The~~ Except as provided in s. Comm 41.18, these vessels and boilers shall be inspected at least once every 36 months by a certified inspector, and these inspections shall be reported to the department on form 10663-E. ~~If operating conditions require, longer periods not to exceed 3 months between inspections may be approved by the department upon receipt of a written request for an extension.~~

(b) Power boilers located within a nuclear containment may be inspected as part of the in-service inspection. Except as provided in s. Comm 41.18, these boilers shall be inspected at least once every 12 months by a certified inspector, and these inspections shall be reported to the department on form 10663-E.

SECTION 99. Comm 41.55 (4) Notes are created to read:

Comm 41.55 (4) Note: Section Comm 41.17 (5) prescribes the steps for extending the period between inspections.

Note: The Department forms required in this chapter are available for a nominal fee at telephone 800-DOC-SALES or Contact Through Relay, or at docsales@doa.state.wi.us, or at no charge at the Department's Web site at www.commerce.wi.gov, through links to Safety and Buildings Division forms.

SECTION 100. Comm 41.56 (1) (title) and (2) are repealed.

SECTION 101. Comm 41.56 (1) is renumbered Comm 41.56 and amended to read:

Comm 41.56 Welded repairs and alterations. ~~Except as specified in sub. (2), the~~ The owner or ~~the owner's agent~~ user shall furnish the department, within 90 calendar days of a refueling outage, a record of all repairs and alterations in accordance with ~~ASME section XI, NIS-2~~ NRC regulations, or ~~the National Board Inspection Code,~~ with the NBIC and forms R-1, R-2~~,~~ and NR-1, as applicable, when any ASME stamped component within the scope of ~~ASME code, section XI~~ the NRC regulations is repaired by welding. If used, the ~~National Board~~ NBIC "R" or "NR-1" forms shall be registered with the National Board in accordance with the ~~National Board Inspection Code~~ NBIC ~~requirements~~.

SECTION 102. Comm 41.56 Note is amended to read:

Comm 41.56 Note: The ASME repair forms accepted by the NRC include NIS-2, Owner's Report for Repair/Replacement Activity; and NIS-2A, Repair/Replacement Certification Record. They are available at http://bpvinspector.com/Section_XI/Section_XI.htm and may be available from the American Society of Mechanical Engineers (ASME) at P.O. Box 2300, Fairfield, NJ 07007-2300, or telephone 800/843-2763, or www.asme.org.

Copies of the National Board forms are available from the National Board, at 1055 Crupper Avenue, Columbus, OH 43229-1183, or telephone 614/888-8320, or www.nationalboard.org. ~~See s. Comm 41.10 for the National Board address and contact information.~~

SECTION 103. Comm 41.57 and 41.60 are amended to read:

Comm 41.57 Report of incidents. The owner or ~~the owner's agent~~ user shall report to the department any incident involving pressure-retaining components that are within the scope of ~~section XI of the ASME code which requires notification~~ the NRC regulations, if the incident must be reported to the ~~U.S. nuclear regulatory commission~~ NRC. The report shall be filed coincident with the report to the ~~U.S. nuclear regulatory commission~~ NRC.

Comm 41.60 General requirements. Welded repairs, repair parts or alterations to any boiler or pressure vessel or their fittings, settings or appurtenances shall comply with the ~~requirements of ANSI/NB-23~~ NBIC.

SECTION 104. Comm 41.62 (title) is amended to read:

Comm 41.62 (title) **Reports and stamping.**

SECTION 105. Comm 41.62 (1) is renumbered Comm 41.62 (1) (a) and amended to read:

Comm 41.62 (1) (a) Anyone performing repairs or alterations under the National Board "R" stamp program shall register the repairs and alterations with the National Board on the appropriate NBIC "R" forms.

SECTION 106. Comm 41.62 (1) (b) is created to read:

Comm 41.62 (1) (b) 1. Stamping of or attaching a nameplate to a repaired or altered pressure-retaining item under NBIC part 3 section 5.7 shall be completed and then verified by a certified inspector before the NBIC "R" form is signed by the inspector.

2. a. Any stamping or attaching of a nameplate under this section shall be in accordance with the NBIC, except as provided in subd. 2.b.

b. If the stamping or attaching cannot be placed in accordance with the NBIC, the substitute placement shall be described on the appropriate NBIC "R" form, and the description shall be verified by the inspector.

SECTION 107. Comm 41.62 (1) Note is renumbered Comm 41.62 (2) (b) Note and amended to read:

Comm 41.62 (2) (b) **Note:** ~~See s. Comm 41.10 for the National Board address~~ Copies of the National Board forms are available from the National Board, at 1055 Crupper Avenue, Columbus, OH 43229-1183, or telephone 614/888-8320, or www.nationalboard.org.

SECTION 108. Comm 41.62 (2) (a) is amended to read:

Comm 41.62 (2) (a) 1. Anyone performing routine repairs as defined in ~~ANSI/NB-23~~ the NBIC shall register the repairs with the National Board on NBIC form R-1 and shall stamp or attach a nameplate to the repaired ~~object~~ item.

2. Any stamping or attaching of a nameplate under this section shall be in accordance with the NBIC, and shall be completed and then verified by the certified inspector before the inspector signs the NBIC R-1 form, except as provided in subd. 2.b.

b. If the stamping or attaching cannot be placed in accordance with the NBIC, the substitute placement shall be described on the NBIC R-1 form, and the description shall be verified by the inspector.

SECTION 109. Comm 41.63 (1) Note, (2) and (3) are amended to read:

Comm 41.63 (1) Note: Information regarding the use of riveted patches is available from the department ~~and may be found in Wisconsin Administrative Code chapters Ind 41-42, Boiler and Pressure Vessel Code, Register, May 1974, No. 221~~.

(2) MATERIALS FOR RIVETED PATCHES. Patch material shall meet the applicable requirements of ~~ANSI/NB-23~~ the NBIC.

(3) PRESSURE TEST. The certified inspector may require a pressure test, as specified in ~~ANSI/NB-23~~ the NBIC, after completion of a riveted repair.

SECTION 110. Comm 41.64 (1) (a), (3) (intro.) and (4) (a) are amended to read:

Comm 41.64 (1) (a) "Repair of a safety valve or safety relief valve" means the replacement, re-machining or cleaning of any critical part; lapping of seat and disc or any other operation ~~which~~ that may affect the flow passage, capacity, function or pressure-retaining integrity; and disassembly, re-assembly and adjustments which affect the safety valve or safety relief valve function.

(3) (intro.) AUTHORIZED REPAIRS. ~~Repairs to~~ Repair of a safety ~~valves and~~ valve or safety relief ~~valves~~ valve shall be performed by an organization in possession of one or more of the following:

(4) (a) When repair of a safety valve or safety relief valve ~~is repaired~~ occurs, a metal repair nameplate stamped with the information required by par. (b) shall be welded or otherwise permanently attached to the valve either above, adjacent to or below the original stamping. On small valves, a metal tag showing the repair nameplate information may be securely attached to the repaired valve.

SECTION 111. Comm 41.70 is amended to read:

Comm 41.70 Application. ~~Sections Comm 41.70 to 41.76 apply~~ This subchapter applies to secondhand boilers and secondhand pressure vessels.

SECTION 112. Comm 41.73 is amended to read:

Comm 41.73 Lap seam boilers. Secondhand boilers which have lap seam construction and which are larger than 36 inches in diameter shall be limited to a maximum allowable working pressure of not more than 15 ~~pounds per square inch~~ psig.

SECTION 113. Comm 41.75 (1), (2) and Note are amended to read:

Comm 41.75 (1) HYDROSTATIC PRESSURE TEST. Every secondhand vessel shall be inspected and given a hydrostatic pressure test at ~~one and one-half~~ 1½ times the maximum allowable working pressure at its new point of installation location before it is placed in operation. The test shall be witnessed by a certified inspector.

(2) ALTERNATIVE TESTS. When the certified inspector determines that a hydrostatic test at ~~one and one-half~~ 1½ times the maximum allowable working pressure is not possible or desirable, the certified inspector may accept alternative means to determine if the vessel is safe for its intended use.

Note: Where water is used in a hydrostatic test, the temperature of the water should not be less than 70°F and the maximum temperature during inspection should not exceed 120°F. If a test is conducted at ~~1-1/2~~ 1½ times the maximum allowable working pressure (MAWP) and the owner specifies a temperature higher than 120°F, the pressure should be reduced to the MAWP and the temperature should be reduced to 120°F for the close examination.

SECTION 114. Comm 41.90 is amended to read:

Comm 41.90 Application. ~~The provisions of ss. Comm 41.90 to 41.92 apply~~ This subchapter applies to all historical boilers in operation for demonstration purposes at fairs, museums, steam shows, historical attractions or any other locations frequented by the public.

SECTION 115. Comm 41.91 (title) and (1) are amended to read:

Comm 41.91 (title) **~~Inspection~~ General requirements. (1)** Historical boilers shall be inspected in accordance with ~~the requirements of~~ NBIC ~~ANSI/NB-23, Part~~ part 2 section 6-~~Supplement~~ supplement 2, Historical Boilers.

SECTION 116. Comm 41.92 (title), (1) (c) Note and (2) (a) are amended to read:

Comm 41.92 (title) **Testing, ~~and~~ maintenance and out-of-state boilers.**

(1) (c) **Note:** The owner or user may use the NBIC form C-1: Initial Boiler Certification Report. The form is available for a nominal fee at telephone 800-DOC-SALES or Contact Through Relay, or at docsales@doa.state.wi.us, or at no charge ~~from the department~~ at the ~~Safety and Buildings Division, P.O. Box 2509, Madison, WI 53701, telephone 608/261-7730, or on the Internet~~ Department's Web site at ~~www.commerce.wi.gov/SB~~ www.commerce.wi.gov, through links to Safety and Buildings Division forms.

(2) (a) The owner or user of an out-of-state historical boiler shall provide ultrasonic thickness test and pressure-calculation documentation in accordance with ~~ANSI/NB-23, Part~~ NBIC part 2~~,~~ section 6~~ Supplement~~ supplement 2, Historical Boilers.

SECTION 117. Comm 41.93 is created to read:

Comm 41.93 Interruption of inspection cycle. If an inspection cycle under NBIC part 2 section 6 S2.7.3.2 is interrupted by delaying a required inspection for more than 1 year, the subsequent inspection cycle shall restart from the beginning of the sequence in NBIC part 2 section 6 S2.7.3., which is the initial inspection under NBIC part 2 section 6 S2.7.3.1.

SECTION 118. Comm 41 Appendix is repealed and recreated to read:

[NOTE TO LEGISLATIVE REFERENCE BUREAU: The Appendix material for this section is included at the end of this document.]

SECTION 119. Comm 45.31 (2) (d) is created to read:

Comm 45.31 (2) (d) Within 5 business days of completing the installations and inspections under par. (b) or (c), a copy of the completed SBD-5204-E form shall be filed with the authorized agent or the department.

Note: The address for submitting forms to the Department is the Safety and Buildings Division, Inspection Support Unit, P.O. Box 7302, Madison, WI 53707-7302; and the fax number is 608-283-7499.

[NOTE TO LEGISLATIVE REFERENCE BUREAU: The material on the following pages is for the chapter Comm 41 Appendix.]

(END)

****

EFFECTIVE DATE

Pursuant to s. 227.22 (2) (intro.), Stats., these rules shall become effective on the first day of the month commencing after the date of publication in the Wisconsin administrative register.

****

File reference: Comm 41/rules 13 PH

Chapter Comm 41

APPENDIX

(EXCERPTS FROM BOILER, PRESSURE VESSEL AND PIPING CODES AND STANDARDS)

Excerpts from the following boiler, pressure vessel and piping codes and standards are reproduced here strictly for reference: ASME Sections I, IV and VIII–Div-1 2010 and ANSI/ASME B31.1 2010. This information has been included to provide a general idea as to the requirements of these codes and standards. Users of this information must be cautioned that these excerpts do not provide complete guidelines for inspection, installation, operation and manufacturing.

Only portions of each code and standard thought to be frequently used by persons not having direct access to the complete documents have been included. It must be noted that these codes and standards change on a periodic basis as indicated in s. Comm 41.10. Those who are bound by the rules of ch. Comm 41 must avail themselves of the applicable code section or standards listed in s. Comm 41.10.

EXCERPTS FROM: ASME BOILER AND PRESSURE VESSEL CODE
SECTION I - POWER BOILERS
2010 EDITION
INTRODUCTION

This Code covers rules for construction of power boilers[1], electric boilers[2], miniature boilers[3], high-temperature water boilers[4], heat recovery steam generators[5], and certain fired pressure vessels[6] to be used in stationary service and includes those power boilers used in locomotive, portable, and traction service. Reference to a paragraph includes all the subparagraphs and subdivisions under that paragraph.

The Code does not contain rules to cover all details of design and construction. Where complete details are not given, it is intended that the manufacturer, subject to the acceptance of the Authorized Inspector, shall provide details of design and construction which will be as safe as otherwise provided by the rules in the Code.

The scope of jurisdiction of Section I applies to the boiler proper and to the boiler external piping.

Superheaters, economizers, and other pressure parts connected directly to the boiler without intervening valves shall be considered as parts of the boiler proper, and their construction shall conform to Section I rules. Boiler external piping shall be considered as that piping which begins where the boiler proper or isolable superheater, or isolable economizer terminates at:

(a) the first circumferential joint for welding end connections; or

(b) the face of the first flange in bolted flanged connections; or

(c) the first threaded joint in that type of connection; and which extends up to and including the valve or valves required by this Code.

ASME Code Certification (including Data Forms and Code Symbol Stamping), and/or inspection by the Authorized Inspector, when required by this Code, is required for the boiler proper and the boiler external piping.

Construction rules for materials, design, fabrication, installation, and testing of the boiler external piping are contained in ASME B3l.l, Power Piping. Piping beyond the valve or valves required by Section I is not within the scope of Section I, and it is not the intent that the Code Symbol Stamp be applied .to such piping or any other piping.

The material for forced-circulation boilers, boilers with no fixed steam and water line, and high-temperature water boilers shall conform to the requirements of the Code. All other requirements shall also be met except where they relate to special features of construction made necessary in boilers of these types, and to accessories that are manifestly not needed or used in connection with such boilers, such as water gages and water columns.

Reheaters receiving steam which has passed through part of a turbine or other prime mover and separately fired steam superheaters which are not integral with the boiler are considered fired pressure vessels and their construction shall comply with Code requirements for superheaters, including safety devices. Piping between the reheater connections and the turbine or other prime mover is not within the scope of the Code. Steam piping to the inlet connections and from the outlet connections of nonintegral separately fired superheaters is not within the scope of the Code.

A pressure vessel in which steam is generated by the application of heat resulting from the combustion of fuel (solid, liquid, or gaseous) shall be classed as a fired steam boiler.

Unfired pressure vessels in which steam is generated shall be classed as unfired steam boilers with the following exceptions:

(a) vessels known as evaporators or heat exchangers

(b) vessels in which steam is generated by the use of heat resulting from operation of a processing system containing a number of pressure vessels such as used in the manufacture of chemical and petroleum products

Unfired steam boilers shall be constructed under the provisions of Section I or Section VIII.

Expansion tanks connected to high-temperature water boilers without intervening valves shall be constructed to the requirements of Section I or Section VIII.

A pressure vessel in which an organic fluid is vaporized by the application of heat resulting from the combustion of fuel (solid, liquid, or gaseous) shall be constructed under the provisions of Section I. Vessels in which vapor is generated incidental to the operation of a processing system, containing a number of pressure vessels such as used in chemical and petroleum manufacture, are not covered by the rules of Section I.

---

[1] Power boiler - a boiler in which steam or other vapor is generated at a pressure of more than 15 psi (100 kPa) for use external to itself.

[2] Electric boiler - a power boiler or a high-temperature water boiler in which the source of heat is electricity.

[3] Miniature boiler - a power boiler or a high-temperature water boiler in which the limits specified in PMB-2 are not exceeded.

[4] High-temperature water boiler - a water boiler intended for operation at pressures in excess of 160 psi (1.1 MPa) and/or temperatures in excess of 250°F (120°C).

[5] Heat recovery steam generator (HRSG) - a boiler that has as its principal source of thermal energy a hot gas stream having high-ramp rates and temperatures such as the exhaust of a gas turbine.

[6] Fired pressure vessel- reheaters, isolable superheaters, and nonintegral separately fired superheaters.

PART PG
GENERAL REQUIREMENTS FOR ALL METHODS OF CONSTRUCTION

GENERAL

PG-1 SCOPE

The requirements of Part PG apply to power boilers and high pressure, high-temperature water boilers and to parts and appurtenances thereto and shall be used in conjunction with the specific requirements in the applicable Parts of this Section that pertain to the methods of construction used.

PG-2 SERVICE LIMITATIONS

PG-2.1 The rules of this Section are applicable to the following services:

(a) boilers in which steam or other vapor is generated at a pressure of more than 15 psig (100kPa)

(b) high-temperature water boilers intended for operation at pressures exceeding 160 psig (1.1 MPa) and/or temperatures exceeding 250°F (120°C)

PG-2.2 For services below those specified in PG-2.1 it is intended that rules of Section IV apply; however, boilers for such services may be constructed and stamped in accordance with this Section provided all applicable requirements are met.

PG-2.3 Coil-type hot water boilers where the water can flash into steam when released directly to the atmosphere through a manually operated nozzle may be exempted from the rules of this Section provided the following conditions are met:

(a) There is no drum, header, or other steam space.
(b) No steam is generated within the coil.
(c) Tubing outside diameter does not exceed 1 in. (25 mm).
(d) Pipe size does not exceed NPS ¾ (DN 20).
(e) Nominal water capacity does not exceed 6 gal (23 L).
(f) Water temperature does not exceed 350°F (175°C).
(g) Adequate safety relief valves and controls are provided.

PG-3 REFERENCED STANDARDS

Specific editions of standards referenced in this Section are shown in A-360.

PG-4 UNITS

Either U.S. Customary units or SI units may be used for compliance with all requirements of this edition, but one system shall be used consistently throughout for all phases of construction.

Either the U.S. Customary units or SI units that are listed in Mandatory Appendix II are identified in the text, or are identified in the nomenclature for equations, shall be used consistently for all phases of construction (e.g., materials, design, fabrication, and reports). Since values in the two systems are not exact equivalents, each system shall be used independently of the other without mixing U.S. Customary units and SI units

When SI units are selected, U.S. Customary values in referenced specifications that do not contain SI units shall be converted to SI values to at least three significant figures for use in calculations and other aspects of construction.

MATERIALS

PG-5 GENERAL

PG-5.1 Except as otherwise permitted in PG-8.2, PG-8.3, PG-10, and PG-11, material subject to stress due to pressure shall conform to one of the specifications given in Section II and shall be limited to those that are listed in the Tables of Section II, Part D. The manufacturer shall ensure that the correct material has been received and is properly identified before proceeding with construction (see A-302.4). Materials shall not be used at temperatures above those for which stress values are limited, for Section I construction, in the Tables of Section II, Part D. Specific additional requirements described in PG-5 through PG-13 shall be met as applicable.

PG-5.2 Material covered by specifications in Section II is not restricted as to the method of production unless so stated in the specification, and as long as the product complies with the requirements of the specification.

PG-5.3 If, in the development of the art of boiler construction, it is desired to use materials other than those herein described, data should be submitted to the Boiler and Pressure Vessel Committee in accordance with the requirements of Appendix 5 of Section II, Part D. Material not completely identified with any approved Code specifications may be used in the construction of boilers under the conditions outlined in PG-10.

PG-5.4 Size Limits and Tolerances

PG-5.4.1 Materials outside the limits of size or thickness given in the title or scope clause of any specification in Section II may be used if the material is in compliance with the other requirements of the specification, and no similar limitation is given in the rules for construction.

PG-5.4.2 Pipe having a tolerance of ±1% on either the O.D. or the I.D. rather than the tolerance specified in the material specification, may be used, provided the material complies with all other requirements of the specifications. When used under external pressure, such pipe shall be limited to a maximum of 24 in. (600 mm) in diameter. The pipe shall include the designation 1% O.D. or 1% I.D., as appropriate, in any required documentation and marking of the material.

PG-5.5 The use of austenitic alloy steel is permitted for boiler pressure parts that are steam touched in normal operation. Except as specifically provided in PG-9.1.1, PG-12, and PEB-5.3, the use of such austenitic alloys for boiler pressure parts that are water wetted in normal service is prohibited.[7]

PG-5.6 P-No. 15E, Group 1 Materials

PG-5.6.1 If during any phase of manufacturing or erection any portion of the component that does not contain a weld is heated to a temperature greater than 1,470°F (800°C), one of the following actions shall be performed:

(a) The component shall be reaustenitized and retempered in its entirety in accordance with the specification requirements.

(b) That portion of the component heated above 1,470°F (800°C), including the heat-affected zone created by the local heating, must be replaced or must be removed, reaustenitized, and retempered in accordance with the specification requirements and then replaced in the component.

(c) If the allowable stress values to be used are less than or equal to those provided in Table 1A of Section II, Part D for Grade 9 (e.g., SA-213 T9, SA-335 P9, or equivalent product specifications) at the design temperature, then the requirements stated above may be waived, provided that the portion of the component heated above 1,470°F (800°C) is retempered in accordance with the specification requirements. The use of this provision shall be noted on the Manufacturer's Data Report.

PG-5.6.2 If during any phase of manufacturing or erection of the component, any portion that does contain a weld is heated above 1,425°F (775°C), then the requirements of Notes (3) and (4) of Table PW-39 for P-No. 15E, Group 1 Materials, shall apply for reheat treatment.

PG-6 PLATE

PG-6.1 Steel plates for any part of a boiler subject to pressure, whether or not exposed to the fire or products of combustion, shall be of pressure vessel quality in accordance with one of the following specifications:

SA-202 Pressure Vessel Plates, Alloy Steel, Chromium-Manganese-Silicon

SA-204 Pressure Vessel Plates, Alloy Steel, Molybdenum

SA-240 (Type 405 only) Pressure Vessel Plates, Alloy Steel (Ferritic Stainless), Chromium

SA-285 Pressure Vessel Plates, Carbon Steel, Low- and Intermediate-Tensile Strength

SA-299 Pressure Vessel Plates, Carbon Steel, Manganese-Silicon

SA-302 Pressure Vessel Plates, Alloy Steel, Manganese-Molybdenum and Manganese-Molybdenum-Nickel

SA-387 Pressure Vessel Plates, Alloy Steel, Chromium-Molybdenum

SA-515 Pressure Vessel Plates, Carbon Steel, for Intermediate- and Higher-Temperature Service

SA-516 Pressure Vessel Plates, Carbon Steel, for Moderate- and Lower-Temperature Service

SA/AS 1548 Steel Plates for Pressure Equipment

SA/EN-10028-2 Flat Products Made of Steels for Pressure Purposes

SA/JIS G3118 Carbon Steel Plates for Pressure Vessels for Intermediate and Moderate Temperature Service

PG-55 SUPPORTS AND ATTACHMENT LUGS

PG-55.1 Lugs or hangers when used to support a boiler of any type shall be properly fitted to the surfaces to which they are attached.

PG-55.2 Lugs, hangers, or brackets may be attached by fusion welding provided the welding meets the requirements of Part PW, including stress relieving but omitting volumetric examination and provided they are attached by full penetration welds, combination groove and fillet welds, or by fillet welds along the entire periphery or contact edges. Some acceptable forms of welds for lugs, hangers, or brackets are shown in Fig. PW-16.2. The materials for lugs, hangers, or brackets are not limited to those listed in Tables 1A and 1B of Section II, Part D, but shall be of weldable quality. The allowable load on the fillet welds shall equal the product of the weld area based on minimum leg dimension, the allowable stress value in tension of the material being welded, and the factor 0.55. When using welded pipe, the stress values given in Table 1A of Section II, Part D, may be increased to that of the basic material by eliminating the stated weld efficiencies.

[7] Austenitic alloys are susceptible to intergranular corrosion and stress corrosion cracking when used in boiler applications in water wetted service. Factors that affect the sensitivity to these metallurgical phenomena are applied or residual stress and water chemistry. Susceptibility to attack is usually enhanced by using the material in a stressed condition with a concentration of corrosive agents (e.g., chlorides, caustic, or reduced sulfer species). For successful operation in water environments, residual and applied stresses must be minimized and careful attention must be paid to continuous control of water chemistry.

FIG. PG-58.3.1(a) CODE JURISDICTIONAL LIMITS FOR PIPING — DRUM-TYPE BOILERS

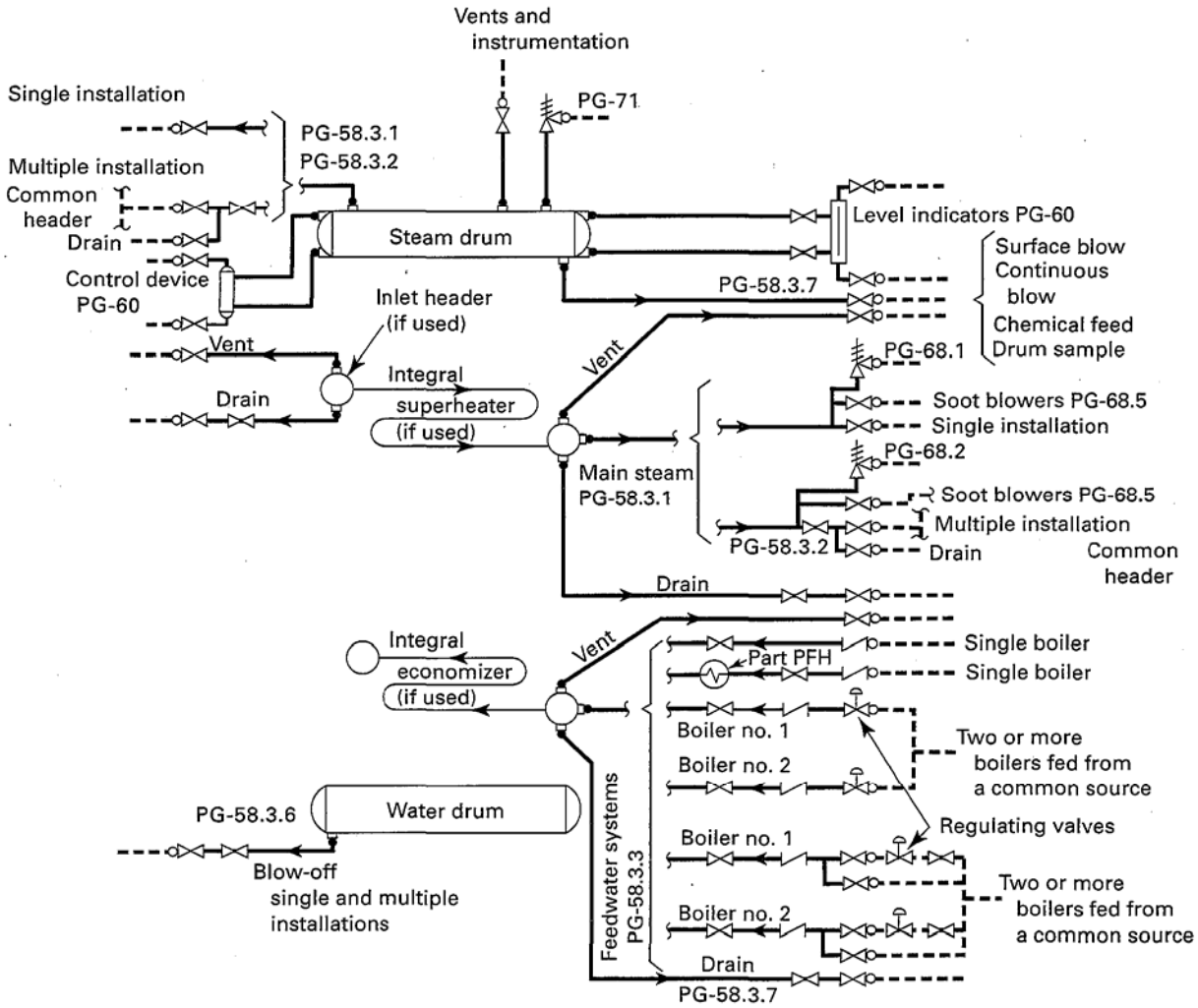

Administrative Jurisdiction & Technical Responsibility

——— Boiler Proper — The ASME Boiler and Pressure Vessel Code (ASME BPVC) has total administrative jurisdiction and technical responsibility (refer to Section I Preamble)

●——— Boiler External Piping and Joint — The ASME BPVC has total administrative jurisdiction (mandatory certification by Code Symbol stamping, ASME Data Forms, and Authorized Inspection) of Boiler External Piping and Joint. The ASME Section Committee B31.1 has been assigned technical responsibilty.

○- - - - - Non-Boiler External Piping and Joint — Not Section I jusidiction (see applicable ASME B31 Code).

FIG. PG-58.3.1(b) CODE JURISDICTIONAL LIMITS FOR PIPING — ISOLABLE ECONOMIZERS LOCATED IN FEEDWATER PIPING AND ISOLABLE SUPERHEATERS IN MAIN STEAM PIPING

(Boiler Pressure Relief Valves, Blowoff, and Miscellaneous Piping for Boiler Proper Not Shown for Clarity)

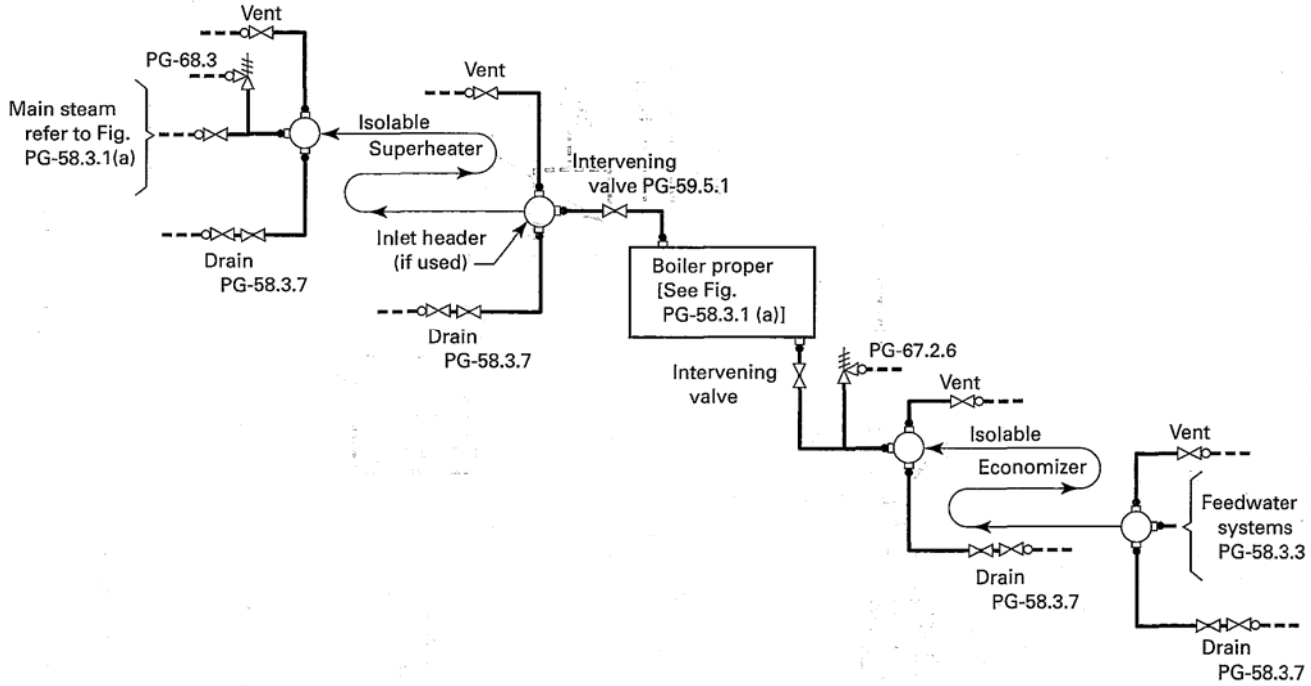

Administrative Jurisdiction & Technical Responsibility

——— Boiler Proper — The ASME Boiler and Pressure Vessel Code (ASME BPVC) has total administrative jurisdiction and technical responsibility (refer to Section I Preamble)

●——— Boiler External Piping and Joint — The ASME BPVC has total administrative jurisdiction (mandatory certification by Code Symbol stamping, ASME Data Forms, and Authorized Inspection) of Boiler External Piping and Joint. The ASME Section Committee B31.1 has been assigned technical responsibilty.

○- - - - - Non-Boiler External Piping and Joint — Not Section I jusidiction (see applicable ASME B31 Code).

FIG. PG-58.3.1(c) CODE JURISDICTIONAL LIMITS FOR PIPING — REHEATERS AND NONINTEGRAL SEPARATELY FIRED SUPERHEATERS

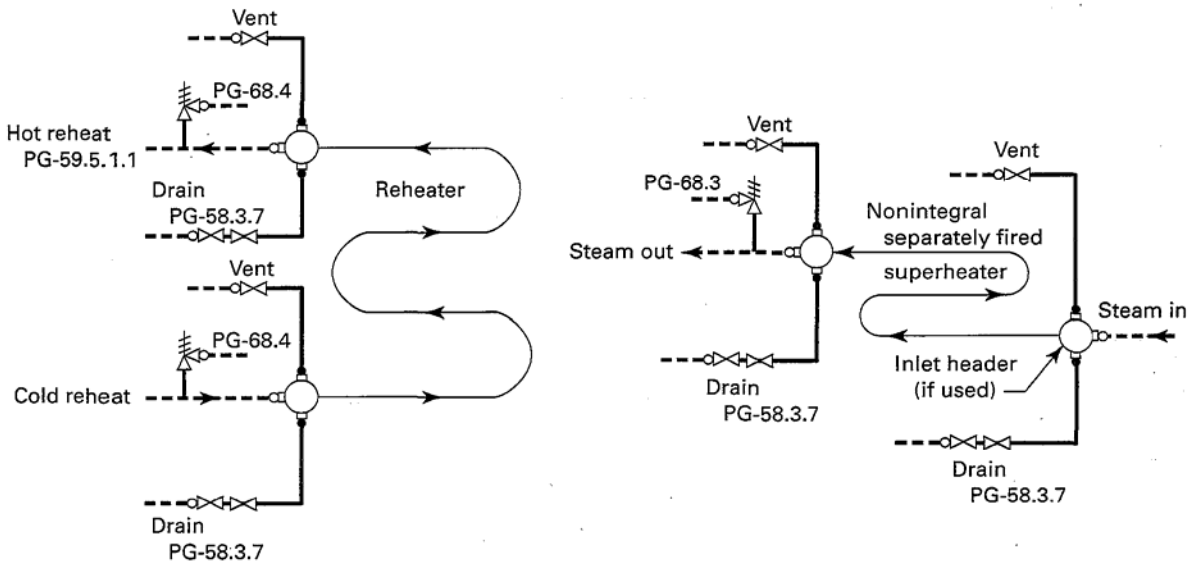

Administrative Jurisdiction & Technical Responsibility

——— Boiler Proper — The ASME Boiler and Pressure Vessel Code (ASME BPVC) has total administrative jurisdiction and technical responsibility (refer to Section I Preamble)

●——— Boiler External Piping and Joint — The ASME BPVC has total administrative jurisdiction (mandatory certification by Code Symbol stamping, ASME Data Forms, and Authorized Inspection) of Boiler External Piping and Joint. The ASME Section Committee B31.1 has been assigned technical responsibilty.

○- - - - - Non-Boiler External Piping and Joint — Not Section I jusidiction (see applicable ASME B31 Code).

FIG. PG-58.3.2 CODE JURISDICTIONAL LIMITS FOR PIPING — AN EXAMPLE OF FORCED-FLOW STEAM GENERATORS WITH NO FIXED STEAM OR WATERLINE

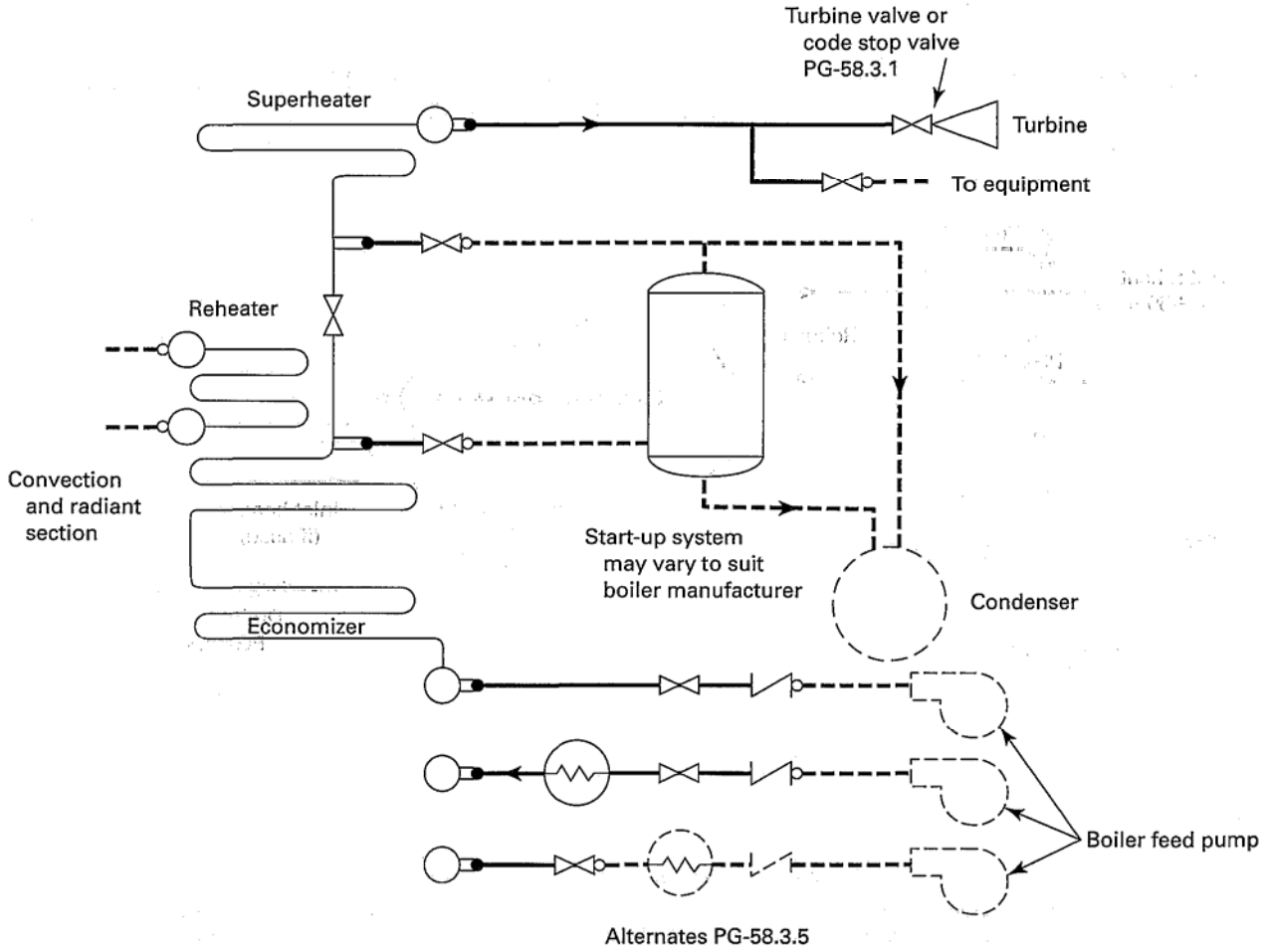

Administrative Jurisdiction & Technical Responsibility

——— Boiler Proper — The ASME Boiler and Pressure Vessel Code (ASME BPVC) has total administrative jurisdiction and technical responsibility (refer to Section I Preamble)

●——— Boiler External Piping and Joint — The ASME BPVC has total administrative jurisdiction (mandatory certification by Code Symbol stamping, ASME Data Forms, and Authorized Inspection) of Boiler External Piping and Joint. The ASME Section Comitee B31.1 has been assigned technical responsibilty.

○- - - - Non-Boiler External Piping and Joint — Not Section I jusidiction (see applicable ASME B31 Code).

FIG. PG-58.3.3 CODE JURISDICTIONAL LIMITS FOR PIPING — AN EXAMPLE OF STEAM SEPARATOR TYPE FORCED-FLOW STEAM GENERATORS WITH NO FIXED STEAM OR WATERLINE

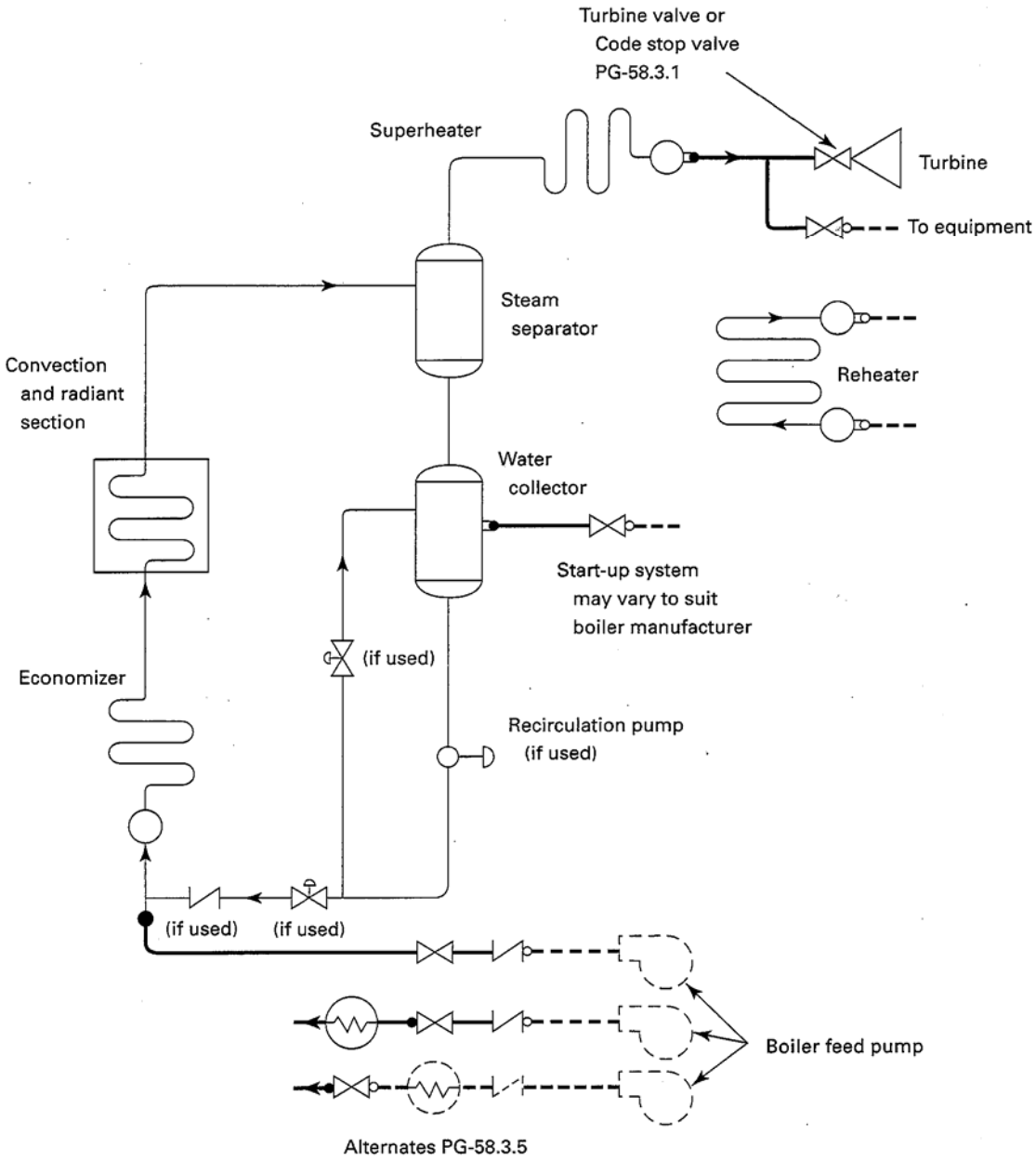

ADMINISTRATIVE JURISDICTION AND TECHNICAL RESPONSIBILITY

——— Boiler Proper – The ASME Boiler and Pressure Vessel Code (ASME BPVC) has total administrative jurisdiction and technical responsibility (refer to Section I Preamble).

●——— Boiler External Piping and Joint – The ASME BPVC has total administrative jurisdiction (mandatory certification by Code Symbol stamping, ASME Data Forms, and Authorized Inspection) of Boiler External Piping and Joint. The ASME Section Committee B31.1 has been assigned technical responsibility.

○- - - - Non-Boiler External Piping and Joint – Not Section I jurisdiction (see applicable ASME B31 Code).

BOILER EXTERNAL PIPING AND BOILER PROPER CONNECTIONS

PG-58 OUTLETS AND EXTERNAL PIPING

PG-58.1 General. The rules of this subparagraph apply to the boiler external piping as defined in the Preamble.

PG-58.2 Boiler External Piping Connections to Boilers. All boiler external piping connected to a boiler for any purpose shall be attached to one of the types of joints listed in PG-59.1.1.1, PG-59.1.1.2, and PG-59.1.1.3.

PG-58.3 Boiler External Piping. The following defines the Code Jurisdictional Limits of the boiler external piping systems, including general requirements, valves, and inspection. The limits are also shown in Figs. PG-58.3.1 and PG-58.3.2. The materials, design, fabrication, installation, and testing shall be in accordance with ASME B31.1, Power Piping.

PG-58.3.1. The steam piping connected to the boiler drum or to the superheater outlet header shall extend up to and including the first stop valve in each connection, except as required by PG-58.3.2. In the case of a single boiler and prime mover installation, the stop valve required herein may be omitted provided the prime mover throttle valve is equipped with an indicator to show whether the valve is open or closed and is designed to withstand the required hydrostatic pressure test of the boiler.

For an isolable or separately fired superheater which discharges steam directly to a process stream, the stop valve required by this paragraph and the safety valve(s) required by PG-68 may be omitted provided the following conditions are satisfied:

(a) The boiler is a drum-type boiler in a single-boiler installation.

(b) The steam discharge passes through the process stream to the atmosphere with no intervening valves.

(c) The system shall be designed so that the process stream through which the steam discharge passes cannot be obstructed in such a way as to cause the pressure in the superheater to exceed that permitted by PG-67.2, with maximum steam flow from the boiler to the superheater. Flow and pressure calculations demonstrating that the superheater will not be overpressurized under any steam flow conditions shall be documented and made available to the Inspector. These calculations shall be certified by a Professional Engineer experienced in the mechanical design of power plants.

(d) There is no valve on the discharge side of the superheater.

(e) Section I jurisdiction shall include the pressure parts between the superheater inlet and the outlet at:

(1) the first circumferential joint for welding end connections; or

(2) the face of the first flange in bolted flange connections; or

(3) the first threaded joint in that type of connection.

PG-58.3.2 When two or more boilers are connected to a common steam header, or when a single boiler is connected to a header having another steam source (e.g., a turbine extraction line), the connection from each boiler having a manhole opening shall be fitted with two stop valves having an ample free-blow drain between them. The boiler external piping includes all piping from the boiler proper up to and including the second stop valve and the free-blow drain valve.

PG-58.3.3 The feedwater piping for all boilers, except high-temperature water boilers and forced-flow steam generators complying with PG-58.3.5, shall extend through the required stop valve and up to and including the check valve except as required by PG-58.3.4. On a single boiler-turbine unit installation the boiler feed shutoff valve may be located upstream from the boiler feed check valve.

If a feedwater heater or heaters meeting the requirements of Part PFH are installed between the required stop valve and the boiler, and are fitted with isolation and bypass valves, provisions must be made to prevent the feedwater pressure from exceeding the maximum allowable working pressure of the piping or feedwater heater, whichever is less. Control and interlock systems are permitted in order to prevent overpressure.

PG-58.3.4 When two or more boilers are fed from a common source, the piping shall be up to and including a globe or regulating valve located between the check valve required in PG-58.3.3 and the source of supply. If the regulating valve is equipped with an isolation valve and a bypass valve, the piping shall be up to and including both the isolation valve downstream from the regulating valve and the shutoff valve in the bypass.

PG-58.3.5 The feedwater piping for a forced-flow steam generator with no fixed steam and waterline may terminate up to and including the stop valve near the boiler and omitting the check valve near the boiler, provided that a check valve having a pressure rating no less than the boiler inlet design pressure is installed at the discharge of the boiler feed pump or elsewhere in the feedline between the feed pump and the feed stop valve. If the feedwater heater(s) is fitted with isolation and bypass valves, the applicable requirements of PG-58.3.3 must be met.

PG-58.3.6 The blowoff piping for all boilers, except forced-flow steam generators with no fixed steam and waterline, high-temperature water boilers, and those used for traction and/or portable purposes, when the maximum allowable working pressure exceeds 100 psi (700kPa) shall extend through and including the second valve. The blowoff piping for all traction and/or portable boilers and for forced circulation and electric boilers

having a normal water content not exceeding 100 gal (380 L) are required to extend through only one valve.

PG-58.3.7 The miscellaneous piping shall include the piping for such items as drains, vents, surface-blow-off, steam and water piping for water columns, gage glasses and pressure gages, and the recirculation return line for a high-temperature water boiler. When a drain is not intended for blowoff purposes (when the boiler is under pressure) a single valve is acceptable, otherwise two valves in series are required except as permitted by PG-58.3.6.

PG-58.3.8 Welded piping in PG-58.3.1, PG-58.3.2, PG-58.3.3, PG-58.3.4, PG-58.3.5, PG-58.3.6, and PG-58.3.7 is also subject to the requirements of PG-104 for proper Code certification.

FIG. PG-59.1 TYPICAL BOILER BUSHINGS

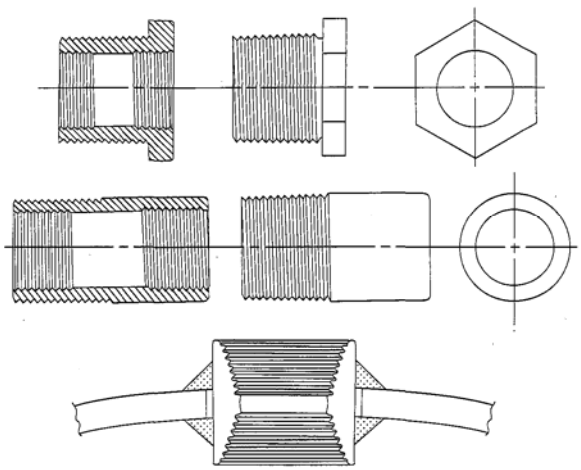

PG-59 APPLICATION REQUIREMENTS FOR THE BOILER PROPER

PG-59.1 Common to Steam, Feedwater, Blowoff, and Drain Systems

PG-59.1.1 Outlets of a boiler to which piping is to be attached for any purpose, and which piping comes within the Code requirements, shall meet the requirements of PG-39 and shall be:

PG-59.1.1.1 A tapped opening.

PG-59.1.1.2 Bolted flanged joints including those of the Van Stone type.

PG-59.1.1.3 Welding ends of the butt or socket welding type.

PG-59.1.1.4 Piping within the boiler proper may be expanded into grooved holes, seal welded if desired. Blowoff piping of firetube boilers shall be attached by threading into a tapped opening with a threaded fitting or valve at the other end if exposed to products of combustion, or by PG-59.1.1.1 or PG-59.1.1.2 if not so exposed (see PFT-49).

PG-59.1.2 Steam Mains. Provisions shall be made for the expansion and contraction of steam mains connected to boilers, by providing substantial anchorage at suitable points, so that there shall be no undue strain transmitted to the boiler. Steam reservoirs shall be used on steam mains when heavy pulsations of the steam currents cause vibration of the boiler shell plates.

PG-59.1.3 Figure PG-59.1 illustrates a typical form of connection for use on boiler shells for passing through piping such as feed, surface blowoff connections, etc., and which permits the pipes' being threaded in solid from both sides in addition to the reinforcing of the opening of the shell. The pipes shall be attached as provided in PG-59.1.1.

In these and other types of boilers where both internal and external pipes making a continuous passage are employed, the boiler bushing or its equivalent shall be used.

PG-59.2 Requirements for Feedwater Connections. The feedwater shall be introduced into a boiler in such a manner that the water will not be discharged directly against surfaces exposed to gases of high temperature or to direct radiation from the fire. For pressures of 400 psi (3 MPa) or over, the feedwater inlet through the drum shall be fitted with shields, sleeves, or other suitable means to reduce the effects of temperature differentials in the shell or head. Feedwater, other than condensate returns as provided for in PG-59.3.6, shall not be introduced through the blowoff.

PG-59.3 Requirements for Blowoffs

PG-59.3.1 A blowoff as required herein is defined as a pipe connection provided with valves located in the external piping through which the water in the boiler may be blown out under pressure, excepting drains such as are used on water columns, gage glasses, or piping to feedwater regulators, etc., used for the purpose of determining the operating condition of such equipment. Piping connections used primarily for continuous operation, such as deconcentrators on continuous blowdown systems, are not classed as blowoffs but the pipe connections and all fittings up to and including the first shutoff valve shall be equal at least to the pressure requirements for the lowest set pressure of any safety valve on the boiler drum and with the corresponding saturated-steam temperature.

PG-59.3.2 A surface blowoff connection shall not exceed NPS 2 ½ (DN 65), and the internal pipe and the terminal connection for the external pipe, when used, shall form a continuous passage, but with clearance between their ends and arranged so that the removal of either will not disturb the other. A properly designed steel bushing, similar to or the equivalent of those shown in Fig. PG-59.1, or a flanged connection shall be used.

PG-59.3.3 Each boiler except forced-flow steam generators with no fixed steam and waterline and high-temperature water boilers shall have a bottom blowoff outlet in direct connection with the lowest water space practicable for external piping conforming to PG-58.3.6.

PG-59.3.4 All waterwalls and water screens that do not drain back into the boiler, and all integral economizers, shall be equipped with outlet connections

for a blowoff or drain line and conform to the requirements of PG-58.3.6 or PG-58.3.7.

PG-59.3.5 Except as permitted for miniature boilers in Part PMB, the minimum size of blowoff connections shall be NPS 1 (DN 25), and the maximum size shall be NPS 2 ½ (DN 65), except that for boilers with 100 ft^2 (9.3 m^2) of heating surface or less, the minimum size of blowoff connections may be NPS ¾ (DN 20).

PG-59.3.6 Condensate return connections of the same size or larger than the size herein specified may be used, and the blowoff may be connected to them. In such case the blowoff shall be so located that the connection may be completely drained.

PG-59.3.7 A bottom blowoff pipe when exposed to direct furnace heat shall be protected by firebrick or other heat resisting material that is so arranged that the pipe may be inspected.

PG-59.3.8 An opening in the boiler setting for a blowoff pipe shall be arranged to provide free expansion and contraction.

PG-59.4 Requirements for Drains

PG-59.4.1 Ample drain connections shall be provided where required to permit complete drainage of all piping, superheaters, waterwalls, water screens, integral economizers, high-temperature water boilers, and all other boiler components in which water may collect. Piping shall conform to the requirements of PG-58.3.6 or PG-58.3.7.

PG-59.4.1.1 Each superheater shall be equipped with at least one drain connection so located as to most effectively provide for the proper operation of the apparatus.

PG-59.4.1.2 Each high-temperature water boiler shall have a bottom drain connection of at least NPS 1 (DN 25) in direct connection with the lowest water space practical for external piping conforming to PG-58.3.7.

PG-59.5 Requirements for Valves and Fittings. The following requirements apply to the use of valves and fittings in the boiler proper.

PG-59.5.1 Steam Stop Valves

PG-59.5.1.1 If a shutoff valve is used between the boiler and its superheater, the safety valve capacity on the boiler shall comply with the requirements of PG-67.2 and PG-70, except as provided for in PG-59.5.1.2, no credit being taken for the safety valve on the superheater, and the superheater must be equipped with safety valve capacity as required by PG-68. A stop valve is not required at the inlet or the outlet of a reheater or separately fired superheater.

PG-59.5.1.2 When stop valves are installed in the water-steam flow path between any two sections of a forced–flow steam generator with no fixed steam and waterline, the safety valves shall satisfy the requirements of PG-67.4.4.

DESIGN AND APPLICATION

PG-60 REQUIREMENTS FOR MISCELLANEOUS PIPE, VALVES, AND FITTINGS

Piping referred to in this paragraph shall be designed in accordance with the applicable requirements of ASME B31.1.

PG-60.1 Water Level Indicators. All boilers having a fixed water level (steam and water interface) shall have at least one gage glass (a transparent device that permits visual determination of the water level). Boilers not having a fixed water level, such as forced-flow steam generators and high-temperature water boilers of the forced circulation type, are not required to have a gage glass. The lowest visible water level in a gage glass shall be at least 2 in. (50 mm) above the lowest permissible water level, as determined by the boiler Manufacturer. Electrode-type electric boilers are required to have only one gage glass, regardless of MAWP.

Gage glasses having multiple tubular sections shall have a minimum of 1 in. (25 mm) overlap of the sections in which the water level may be visible. Segmented gage glasses, such as ported or end-connected strip gages, shall be equipped to provide obvious visual discrimination between water and vapor in the individual sections.

PG-60.1.1 Boilers having a maximum allowable working pressure exceeding 400 psi (3 MPa) shall have two gage glasses. Instead of one of the two required gage glasses, two independent remote water level indicators (two discrete systems that continuously measure, transmit, and display water level) may be provided.

PG-60.1.1.1 When the water level in at least one gage glass is not readily visible to the operator in the area where control actions are initiated, either a fiber optic cable (with no electrical modification of the optical signal) or mirrors shall be provided to transfer the optical image of the water level to the control area. Alternatively, any combination of two of the following shall be provided:

(a) an independent remote water level indicator
(b) an independent continuous transmission and display of an image of the water level in a gage glass.

PG-60.1.1.2 When two independent remote water level indicators are in reliable operation (continuously indicating water level), the one required gage glass may be shut off, but shall be maintained in the serviceable condition.

PG-60.1.1.3 The display of a remote water level indicator shall have a clearly marked minimum water level reference at least 2 in. (50 mm) above the lowest permissible water level, as determined by the Manufacturer.

PG-60.1.6 Each gage glass shall be fitted with a drain cock or valve having an unrestricted drain opening of not less than ¼ in. (6 mm) diameter to facilitate cleaning. When the boiler MAWP exceeds 100 psi (700

kPa), the gage glass shall be furnished with a connection to install a valved drain to a point of safe discharge. Each gage glass shall be equipped with a top and a bottom shutoff valve of such through-flow construction as to prevent stoppage by deposits of sediments. If the bottom valve is more than 7 ft (2 m) above the floor or platform from which it is operated, the operating mechanism shall indicate by its position whether the valve is open or closed. The pressure—temperature rating of valves, fittings, and piping shall be at least equal to the boiler MAWP and the corresponding saturated-steam temperature.

Straight-run globe valves shall not be used on such connections. Automatic shutoff valves, if permitted to be used, shall conform to the requirements given in A-18.

PG-60.2 Water Columns

PG-60.2.1 A water column shall be so mounted that it will be correctly positioned, relative to the normal water level under operating conditions.

PG-60.2.3 Each water column shall be furnished with a connection of at least NPS ¾ (DN 20) to install a valved drain to a safe point of discharge.

PG-60.2.4 The design and material of a water column shall comply with the requirements of PG-8.2, PG-8.3, and PG-42.

PG-60.3 Connections.

PG-60.3.1 Gage glasses that are required by PG-60.1 shall be connected directly to the shell or drum of the boiler or to an intervening water column. When two gage glasses are required, both may be connected to a single water column.

PG-60.3.2 The lower edge of the steam connection between a water column or gage glass in the boiler shall not be below the highest visible water level in the gage glass. There shall be no sag or offset in the piping that will permit the accumulation of water.

PG-60.3.3 The upper edge of the water connection between a water column or gage glass and the boiler shall not be above the lowest visible water level in the gage glass. No part of this pipe connection shall be above the point of connection at the water column.

PG-60.3.4 Connections from the boiler to the water column shall be at least NPS 1 (DN 25). Connections for gage glasses connected directly to the boiler or to an intervening water column shall be at least NPS ½ (DN 15). Connections from the boiler to the remote level indicator shall be at least NPS ¾ (DN 20) to and including the isolation valve and from there to the remote level indicator at least ½ in. (13 mm) O.D. tubing.

PG-60.3.5 When the boiler MAWP exceeds 400 psi (3 MPa), lower connections to drums for water columns and remote level indicators shall be provided with shields, sleeves, or other suitable means to reduce the effect of temperature differentials in the shells or heads.

PG-60.3.6 The steam and water connections to a water column or a gage glass shall be readily accessible for internal inspection and cleaning. Some acceptable methods of meeting this requirement are by providing a cross or fitting with a back outlet at each right-angle turn to permit inspection and cleaning in both directions, or by using pipe bends or fittings of a type that does not leave an internal shoulder or pocket in the pipe connection and with a radius of curvature that will permit the passage of a rotary cleaner. Screwed plug closures using threaded connections as allowed by PG-39.5.3 are acceptable means of access for this inspection and cleaning. When the boiler MAWP exceeds 400 psig (3 MPa), socket-welded plugs may be used for this purpose in lieu of screwed plugs. If the water connection to the water column has a rising bend or pocket that cannot be drained by means of the water-column drain, an additional drain shall be placed on this connection so that it may be blown off to clear any sediment from the pipe.

FIG. PG-60.3.7 Y-TYPE GLOBE VALVE

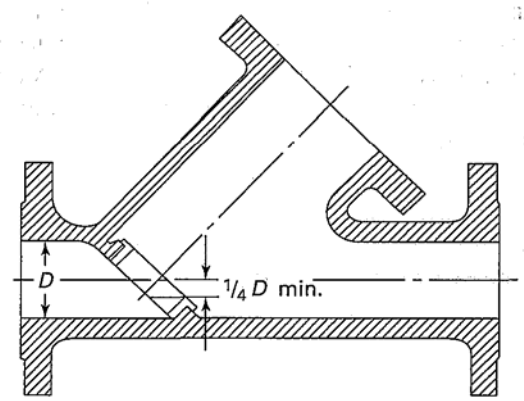

PG-60.3.7 Shutoff valves, if provided in the pipe connections between a boiler and a water column or between a boiler and the shutoff valves required for the gage glass (PG-60.1.6), shall be of such through-flow construction as to prevent stoppage by deposits of sediment and shall indicate whether they are in open or closed position of the operating mechanism.

Some examples of acceptable valves are:

(a) outside-screw-and-yoke type gate valve

(b) lever-lifting-type gate valve with permanently fastened lever

(c) stopcock with the plug held in place by a guard or gland

(d) ball valve

Such valves shall be locked or sealed open except under the following additional conditions:

(1) The boiler MAWP shall not exceed 250 psig (1.7 MPa).

(2) The boiler shall not be hand fired or fired with solid fuel not in suspension.

(3) Interlocks between the valve and the burner control system shall stop fuel supply and prevent firing whenever the valve between the drum and the water column is not in the fully open position.

(4) The minimum valve size shall be NPS 1 (DN 25).

PG-60.3.8 Except for control devices such as damper regulators and feedwater regulators, drains, steam pressure gages, or apparatus of such form as does not permit the escape of an appreciable amount of steam or water therefrom, no outlet connections shall be placed on the piping connecting a water column or gage glass to a boiler. No outlet connections shall be placed on the piping connecting a remote level indicator to the boiler or to a water column for any function other than water level indication.

PG-60.3.9 An acceptable arrangement is shown in Fig. PG-60.3.9

FIG. PG-60.3.9 TYPICAL ARRANGEMENT OF STEAM AND WATER CONNECTIONS FOR A WATER COLUMN

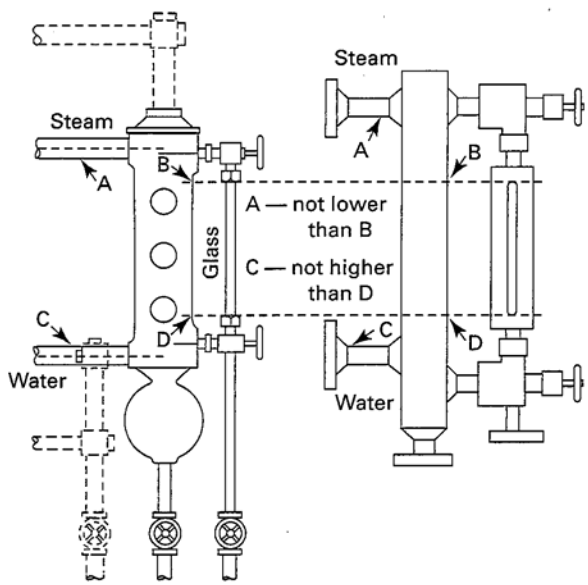

PG-60.4 Gage Cocks. Not required.

PG-60.5 Water Fronts. Each boiler fitted with a water jacketed boiler-furnace mouth protector, or similar appliance having valves on the pipes connecting them to the boiler shall have these valves locked or sealed open. Such valves, when used, shall be of the straightway type.

PG-60.6 Pressure Gages

PG-60.6.1 Each boiler shall have a pressure gage so located that it is easily readable. The pressure gage shall be installed so that it shall at all times indicate the pressure in the boiler. Each steam boiler shall have the pressure gage connected to the steam space or to the water column or its steam connection. A valve or cock shall be placed in the gage connection adjacent to the gage. An additional valve or cock may be located near the boiler providing it is locked or sealed in the open position. No other shutoff valves shall be located between the gage and the boiler. The pipe connection shall be of ample size and arranged so that it may be cleared by blowing out. For a steam boiler the gage or connection shall contain a syphon or equivalent device that will develop and maintain a water seal that will prevent steam from entering the gage tube. Pressure gage connections shall be suitable for the maximum allowable working pressure and temperature, but if the temperature exceeds 406°F (208°C), brass or copper pipe or tubing shall not be used. The connections to the boiler, except the syphon, if used, shall not be less than NPS ¼ (DN 8) but where steel or wrought iron pipe or tubing is used, they shall not be less than ½ in. (13 mm) inside diameter. The minimum size of a syphon, if used, shall be ¼ in. (6 mm) inside diameter. The dial of the pressure gage shall be graduated to approximately double the pressure at which the safety valve is set, but in no case to less than 1 ½ times this pressure.

PG-60.6.2 Each forced-flow steam generator with no fixed steam and waterline shall be equipped with pressure gages or other pressure measuring devices located as follows:

PG-60.6.2.1 At the boiler or superheater outlet (following the last section which involves absorption of heat), and

PG-60.6.2.2 At the boiler or economizer inlet (preceding any section that involves absorption of heat), and

PG-60.6.2.3 Upstream of any shutoff valve that may be used between any two sections of the heat absorbing surface.

PG-60.6.3 Each boiler shall be provided with a valve connection at least NPS ¼ (DN 8) for the exclusive purpose of attaching a test gage when the boiler is in service, so that the accuracy of the boiler pressure gage can be ascertained.

PG-60.6.4 Each high-temperature water boiler shall have a temperature gage so located and connected that it shall be easily readable. The temperature gage shall be installed so that it at all times indicates the temperature in degrees Fahrenheit (Celsius) of the water in the boiler, at or near the outlet connection.

PG-61 FEEDWATER SUPPLY

PG-61.1 Except as provided for in PG-61.2 and PG-61.4, boilers having more than 500 ft^2 (47 m^2) of water-heating surface shall have at least two means of feeding water. Except as provided for in PG-61.3, PG-61.4, and PG-61.5, each source of feeding shall be capable of supplying water to the boiler at a pressure of 3% higher than the highest setting of any safety valve on the boiler. For boilers that are fired with solid fuel not in suspension, and for boilers whose setting or heat source can continue to supply sufficient heat to cause damage to the boiler if the feed supply is interrupted, one such means of feeding shall not be susceptible to the same interruption as the other, and each shall provide sufficient water to prevent damage to the boiler.

PG-61.2 Except as provided for in PG-61.1, a boiler fired by gaseous, liquid, or solid fuel in suspension, or heated by combustion turbine engine exhaust, may be equipped with a single means of feeding water, provided

means are furnished for the shutting off of its heat input prior to the water level reaching the lowest permissible level established by PG-60.

PG-61.3 For boilers having a water-heating surface of not more than 100 ft^2 (9.3 m^2) the feed connection to the boiler shall not be smaller than NPS ½ (DN 15). For boilers having a water-heating surface more than 100 ft^2 (9.3 m^2) the feed connection to the boiler shall not be less than NPS ¾ (DN 20).

PG-61.4 High-temperature water boilers shall be provided with means of adding water to the boiler or system while under pressure.

PG-61.5 A forced-flow steam generator with no fixed steam and waterline shall be provided with a source of feeding capable of supplying water to the boiler at a pressure not less than the expected maximum sustained pressure at the boiler inlet, as determined by the boiler Manufacturer, corresponding to operation at maximum designed steaming capacity with maximum allowable working pressure at the superheater outlet.

OVERPRESSURE PROTECTION REQUIREMENTS

PG-67 BOILER

PG-67.1 Each boiler shall have at least one pressure relief valve and if it has more than 500 ft^2 (47 m^2) of bare tube water-heating surface, or if an electric boiler has a power input more than 1,100 kW, it shall have two or more pressure relief valves. For a boiler with combined bare tube and extended water-heating surface exceeding 500 ft^2 (47 m^2), two or more pressure relief valves are required only if the design steam generating capacity of the boiler exceeds 4,000 lb/hr (1 800 kg/hr). Organic fluid vaporizer generators require special consideration as given in Part PVG.

PG-67.2 The pressure relief valve capacity for each boiler (except as noted in PG-67.4) shall be such that the pressure relief valve, or valves will discharge all the steam that can be generated by the boiler without allowing the pressure to rise more than 6% above the highest pressure at which any valve is set and in no case to more than 6% above the maximum allowable working pressure.

PG-67.2.1 The minimum required relieving capacity of the pressure relief valves for all types of boilers shall be not less than the maximum designed steaming capacity at the MAWP of the boiler, as determined by the Manufacturer and shall be based on the capacity of all the fuel burning equipment as limited by other boiler functions.

PG-67.2.2 The minimum required relieving capacity for a waste heat boiler shall be determined by the Manufacturer. When auxiliary firing is to be used in combination with waste heat recovery, the maximum output as determined by the boiler Manufacturer shall include the effect of such firing in the total required capacity. When auxiliary firing is' to be used in place of waste heat recovery, the minimum required relieving capacity shall be based on auxiliary firing or waste heat recovery, whichever is higher.

PG-67.2.3 The minimum required relieving capacity for electric boilers shall be in accordance with PEB-15.

PG-67.2.4 The minimum required relieving capacity in lb/hr (kg/hr) for a high-temperature water boiler shall be determined by dividing the maximum output in Btu/hr (W) at the boiler nozzle, produced by the highest heating value fuel for which the boiler is designed, by 1,000 (646).

PG-67.2.5 The minimum required relieving capacity for organic fluid vaporizers shall be in accordance with PVG-12. The minimum required relieving capacity for miniature boilers shall be in accordance with PMB-15.

PG-67.2.6 Any economizer that may be shut off from the boiler, thereby permitting the economizer to become a fired pressure vessel, shall have one or more pressure relief valves with a total discharge capacity, in lb/hr (kg/hr), calculated from the maximum expected heat absorption in Btu/hr (W), as determined by the Manufacturer, divided by 1,000 (646). This absorption s shall be stated in the stamping (PG-106.4). For overpressure conditions where the fluid relieved is water, the discharge capacity of the pressure relief valve, or valves shall be sufficient to prevent the pressure from exceeding the limits of PG-67.2.

PG-67.2.7 The steam generated when all pressure relief valves are relieving at full lift on a boiler that has a steam-generating surface located downstream in the gas stream of a superheater and/or reheater surface may exceed the maximum designed steaming capacity at the MA WP of the boiler. The Manufacturer shall address this by one of the following methods:

PG-67.2.7.1 The minimum required relieving capacity of the pressure relief valves shall not be less than the steam that may be generated with all pressure relief valves relieving at full lift. For boilers that use auxiliary firing in combination with the primary heat source, the Manufacturer shall include the effect of such firing in the total required capacity.

PG-67.2.7.2 The minimum required relieving capacity of the pressure relief valves shall not be less than the maximum designed steaming capacity at the MAWP of the boiler, and the boiler shall be provided with controls responsive to steam pressure, which include not less than the following:

(a) a control that reduces that total heat input to the boiler such that the steam generated does not exceed the maximum designed steaming capacity at the MAWP of the boiler

(b) a control that trips the heat input to the boiler if the pressure reaches 106% of the MAWP of the boiler

PG-67.3 One or more pressure relief valves on the boiler proper shall be set at or below the maximum allowable working pressure (except as noted in PG-67.4). If additional valves are used the highest pressure setting shall not exceed the maximum allowable working pressure by more than 3%. The complete range of pressure settings of all the saturated-steam pressure relief valves on a boiler shall not exceed 10% of the highest pressure to which any valve is set. Pressure setting of pressure relief valves on high-temperature water boilers[8] may exceed this 10% range. Economizer pressure relief devices required by PG-67.2.6 shall be set as above using the MAWP of the economizer.

FIG. PG-67.4 REQUIREMENTS FOR OVERPRESSURE PROTECTION FORCED-FLOW STEAM GENERATOR

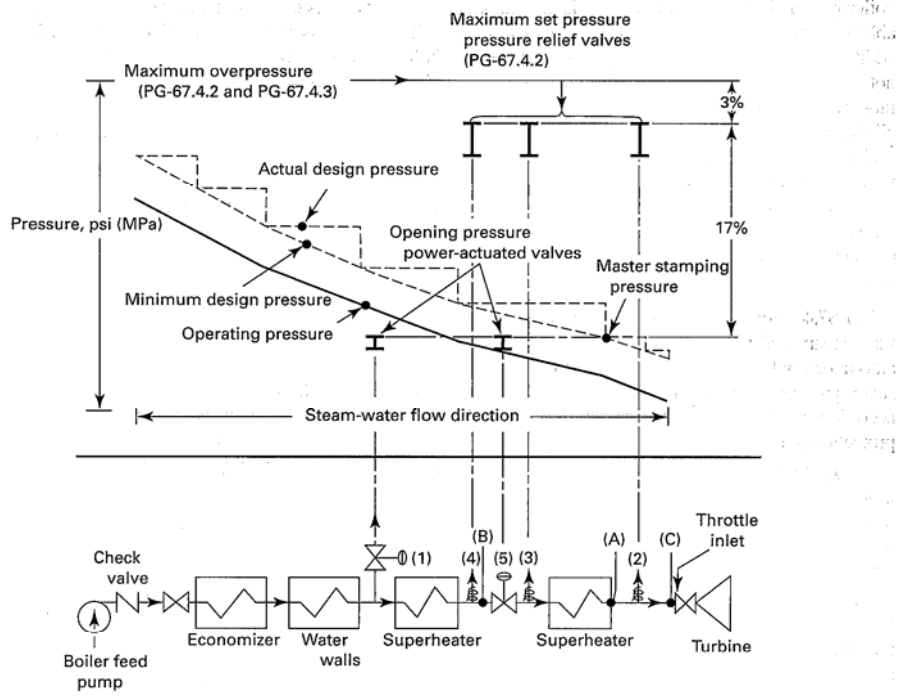

Pressure
(A) = master stamping (PG-106.3)
(B) = component design at inlet to stop valve (5) (PG-67.4.4.1)
(C) = turbine throttle inlet (ASME B31.1, para. 122.1.2, A.4)

Pressure Relief and Power-Actuated Valves
(1) = power actuated (PG-67.4.1)
(2), (3), and (4) = pressure relief valve (PG-67.4.2)
(5) = superheater stop (PG-67.4.4)

Pressure Relief Valve Flow Capacity (minimum, based on rated capacity of boiler)
(1) = 10% – 30% (PG-67.4.1)
(2) = minimum of one valve (PG-68.1)
(2) + (3) when downstream to stop valve (5) = that required for independently fired superheaters (PG-68.3)
(2) + (3) + (4) = 100% – (1) (PG-67.4.2)

Pressure Relief Valve Opening Pressure (maximum)
(1) = (A), and (B) when there is stop valve (5) (PG-67.4.1)
(2), (3), and (4) = (A) + 17% (PG-67.4.2)
(5) = (A) (PG-67.4.1)

Alternate Requirements for Pressure Relief Valves

Pressure Relief Valve Flow Capacity (minimum, based on rated capacity of boiler)
(1) = 10% – 30% (PG-67.4.1)
(2) = one valve minimum (PG-68.1)
(2) + (3) when downstream to stop valve (5) = that required for independently fired superheaters (PG-68.3)
(4) = 10% total with minimum of two valves when there is a stop valve (5) (PG-67.5.3.3)
(2) + (4) = 10% with minimum of two valves when there is no stop valve (5) (PG-67.4.3.3)

Pressure Relief Valve Opening Pressure (maximum)
(1) = (A), and (B) when there is stop valve (5) (PG-67.4.1)
(2), (3), and (4) = (A) + 20% (PG-67.4.3.3)
(5) = (A) (PG-67.4.1)

Automatic Pressure Controls (PG-67.4.3)
(a) at (C) for normal operation under load (PG-67.4.3.2.1)
(b) at (A) + 10% to overide control (a) (PG-67.4.3.2.2)
(c) at (A) + 20% to shut off flow of fuel and feedwater (PG-67.4.3.2.3)
(d) pressure relief valves at (4) to shut off flow of fuel and feedwater by "fail-safe" power circuit (PG-67.4.3.4)

[8] Pressure relief valves in hot water service are more susceptible to damage and subsequent leakage, than pressure relief valves relieving steam. It is recommended that the maximum allowable working pressure of the boiler and the pressure relief valve setting for high-temperature water boilers be selected substantially higher than the desired operating pressure so as to minimize the times the pressure relief valve must lift.

PG-67.4 For a forced-flow steam generator with no fixed steam and waterline (Fig. PG-6704), equipped with automatic controls and protective interlocks responsive to steam pressure, pressure relief valves may be provided in accordance with the above paragraphs or the following protection against overpressure shall be provided:

PG-67.4.1 One or more power-actuated pressure relieving valves[9] shall be provided in direct communication with the boiler when the boiler is under pressure and shall receive a control impulse to open when the maximum allowable working pressure at the superheater outlet, as shown in the master stamping (PG-106.3), is exceeded. The total combined relieving capacity of the power-actuated relieving valves shall be not less than 10% of the maximum design steaming capacity of the boiler under any operating condition as determined by the Manufacturer. The valve or valves shall be located in the pressure part system where they will relieve the overpressure.

An isolating stop valve of the outside-screw-and-yoke or ball type may be installed between the power-actuated pressure relieving valve and the boiler to permit repairs provided an alternate power-actuated pressure relieving valve of the same capacity is so installed as to be in direct communication with the boiler in accordance with the requirements of this paragraph.

The isolating stop valve port area shall at least equal the area of the inlet of the power-actuated pressure relieving valve. If the isolating stop valve is of the ball type, the valve shall include a means to clearly identify whether the valve is in the open or closed position. If the isolating stop valve is power actuated (air, motor, hydraulic, etc.), a manual override mechanism shall be provided.

Power-actuated pressure relieving valves discharging to intermediate pressure and incorporated into bypass and/or startup circuits by the boiler Manufacturer need not be capacity certified. Instead, they shall be marked by the valve manufacturer with a capacity rating at a set of specified inlet pressure and temperature conditions. Power-actuated pressure relieving valves discharging directly to atmosphere shall be capacity certified. This capacity certification shall be conducted in accordance with the provisions of PG-69.3. The valves shall be marked in accordance with the provisions of PG-69.4.

[9] The power-actuated pressure relieving valve is one whose movements to open or close are fully controlled by a source of power (electricity, air, steam, or hydraulic). The valve may discharge to atmosphere or to a container at lower pressure. The discharge capacity may be affected by the downstream conditions, and such effects shall be taken into account. If the power-actuated pressure relieving valves are also positioned in response to other control signals, the control impulse to prevent overpressure shall be responsive only to pressure and shall override any other control function.

PG-67.4.2 Pressure relief valves shall be provided, having a total combined relieving capacity, including that of the power-actuated pressure relieving capacity installed under PG-67.4.l, of not less than 100% of the maximum designed steaming capacity of the boiler, as determined by the Manufacturer, except the alternate provisions of PG-67.4.3 are satisfied. In this total, no credit in excess of 30% of the total required relieving capacity shall be allowed for the power-actuated pressure relieving valves actually installed. Any or all of the pressure relief valves may be set above the maximum allowable working pressure of the parts to which they are connected, but the set pressures shall be such that when all of these valves (together with the power-actuated pressure relieving valves) are in operation the pressure will not rise more than 20% above the maximum allowable working pressure of any part of the boiler, except for the steam piping between the boiler and the prime mover.

PG-67.4.3 The total installed capacity of spring loaded safety valves may be less than the requirements of PG-67.4.2 provided all of the following conditions are met.

PG-67.4.3.1 The boiler shall be of no less steaming capacity than 1,000,000 lb/hr (450 000 kg/hr) and installed in a unit system for power generation (i.e., a single boiler supplying a single turbine-generator unit).

PG-67.4.3.2 The boiler shall be provided with automatic devices, responsive to variations in steam pressure, which include not less than all the following:

PG-67.4.3.2.1 A control capable of maintaining steam pressure at the desired operating level and of modulating firing rates and feedwater flow in proportion to a variable steam output.

PG-67.4.3.2.2 A control that overrides PG-67.4.3.2.1 by reducing the fuel rate and feedwater flow when the steam pressure exceeds the maximum allowable working pressure as shown in the master stamping (PG-106.3) by 10%; and

PG-67.4.3.2.3 A direct-acting overpressure-trip-actuating mechanism, using an independent pressure sensing device, that will stop the flow of fuel and feedwater to the boiler, at a pressure higher than the set pressure of PG-67.4.3.2.2, but less than 20% above the maximum allowable working pressure as shown in the master stamping (PG-106.3).

PG-67.4.3.3 There shall be not less than two pressure relief valves and the total rated relieving capacity of the pressure relief valves shall be not less than 10% of the maximum designed steaming capacity of the boiler as determined by the Manufacturer. These pressure relief valves may be set above the maximum allowable working pressure of the parts to which they are connected but shall be set such that the valves will lift at a pressure no higher than 20% above the maximum allowable working pressure as shown in the master stamping (PG-106.3).

PG-67.4.3.4 At least two of these pressure relief valves shall be equipped with a device that directly transmits the valve stem lift action to controls that will stop the flow of fuel and feedwater to the boiler. The control circuitry to accomplish this shall be arranged in a "fail-safe" manner (see Note).

NOTE: "Fail-safe" shall mean a circuitry arranged as either of the following:

(a)*Energize to trip:* There shall be at least two separate and independent trip circuits served by two power sources, to initiate and perform the trip action. One power source shall be a continuously charged DC battery. The second source shall be an AC-to-DC converter connected to the DC system to charge the battery and capable of performing the trip action. The trip circuits shall be continuously monitored for availability.

It is not mandatory to duplicate the mechanism that actually stops the flow of fuel and feedwater.

(b) *De-energize to trip:* If the circuits are arranged in such a way that a continuous supply of power is required to keep the circuits closed and operating and such that any interruption of power supply will actuate the trip mechanism, then a single trip circuit and single power supply will be enough to meet the requirements of this subparagraph.

PG-67.4.3.5 The power supply for all controls and devices required by PG-67.4.3 shall include at least one source contained within the same plant as the boiler and which is arranged to actuate the controls and devices continuously in the event of failure or interruption of any other power sources.

PG-67.4.4 When stop valves are installed in the water-steam flow path between any two sections of a forced-flow steam generator with no fixed steam and waterline:

PG-67.4.4.1 The power-actuated pressure relieving valve(s) required by PG-67.4.1 shall also receive a control impulse to open when the maximum allowable working pressure of the component, having the lowest pressure upstream to the stop valve, is exceeded; and

PG-67.4.4.2 The pressure relief valves shall be located to provide the pressure protection requirements in PG-67.4.2 or PG-67.4.3.

PG-67.4.5 A reliable pressure-recording device shall always be in service and records kept to provide evidence of conformity to the above requirements.

PG-67.5 The coefficient of discharge of pressure relief valves shall be determined by actual steam flow measurements at a pressure not more than 3 % above the pressure at which the valve is set to relieve and when adjusted for blowdown in accordance with PG-69.1.4. The valves shall be credited with capacities as determined by the provisions of PG-69.2.

Pressure relief valves may be used that give any opening up to the full discharge capacity of the area of the opening of the inlet of the valve, provided the movement of a steam pressure relief valve is such as not to induce lifting of water in the boiler.

For high-temperature water boilers pressure relief valves shall be used. Such valves shall have a closed bonnet. In addition the pressure relief valves shall be capable of satisfactory operation when relieving water at the saturation temperature corresponding to the pressure at which the valve is set to blow.

PG-68 SUPERHEATER AND REHEATER

PG-68.1 Except as permitted in PG-58.3.1, every attached superheater shall have one or more pressure relief valves in the steam flow path between the superheater outlet and the first stop valve. The location shall be suitable for the service intended and shall provide the overpressure protection required. The pressure drop upstream of each pressure relief valve shall be considered in the determination of set pressure and relieving capacity of that valve. If the superheater outlet header has a full, free steam passage from end to end and is so constructed that steam is supplied to it at practically equal intervals throughout its length so that there is a uniform flow of steam through the superheater tubes and the header, the pressure relief valve, or valves, may be located anywhere in the length of the header.

PG-68.2 The discharge capacity of the pressure relief valve, or valves, on an attached superheater may be included in determining the number and size of the pressure relief valves for the boiler, provided there are no intervening valves between the superheater pressure relief valve and the boiler, and provided the discharge capacity of the pressure relief valve, or valves, on the boiler, as distinct from the superheater is at least 75% of the aggregate valve capacity required.

PG-68.3 Every isolable superheater that may be shut off from the boiler and permit the superheater to become a fired pressure vessel and all nonintegral separately fired superheaters shall have one or more pressure relief valves having a discharge capacity equal to 6 lb/ft^2 (29 kg/m^2) of steam per hour, using the superheater surface measured on the side exposed to the hot gases. As an alternative the Manufacturer may also calculate the minimum pressure relief valve discharge capacity in lb (kg) of steam per hour from the maximum expected heat absorption (as determined by the Manufacturer) in Btu/hr (W), divided by 1,000 (646). In the case of electrically heated superheaters, the pressure relief valve capacity shall be based upon 3 ½ lb (1.6 kg)/hr/kW input. The number of pressure relief valves installed shall be such that the total capacity is at least equal to that required. Pressure relief valves for separately fired superheaters shall be located in accordance with the rules of PG-68.1 and the mounting rules of PG-71.

PG-68.4 Every reheater shall have one or more pressure relief valves, such that the total relieving capacity is at least equal to the maximum steam flow for which the heater is designed. The capacity of the reheater pressure relief valves shall not be included in the required relieving capacity for the boiler and superheater.

One or more pressure relief valves with a combined relieving capacity not less than 15% of the required total shall be located along the steam flow path between the reheater outlet and the first stop valve. The pressure drop upstream of the pressure relief valves on the outlet side of the reheater shall be considered in determining their set pressure.

PG-68.5 A soot blower connection may be attached to the same outlet from the superheater or reheater that is used for the pressure relief valve connection.

PG-68.6 Every pressure relief valve used on a superheater or reheater discharging superheated steam at a temperature over 4500P (230°C) shall have a casing, including the base, body, and, if applicable, bonnet and spindle, of steel, steel alloy, or equivalent heat-resisting material.

The pressure relief valve shall have a flanged inlet connection, or a weld-end inlet connection. It shall have the seat and disk of suitable heat erosive and corrosive resisting material, and the spring of direct spring-loaded safety valves shall be fully exposed outside of the valve casing so that it shall be protected from contact with the escaping steam.

PG-68.7 The capacity of a pressure relief valve on superheated steam shall be calculated by multiplying the capacity determined in accordance with PG-69.2 by the appropriate superheat correction factor K_{sh}, from Table PG-68.7.

TABLE PG-68.7
SUPERHEAT CORRECTION FACTOR, K_{sh}

Flowing Pressure (psia)	Superheat Correction Factor, K_{sh}, Total Temperature, °F, of Superheated Steam																
	400	450	500	550	600	650	700	750	800	850	900	950	1000	1050	1100	1150	1200
50	0.987	0.957	0.930	0.905	0.882	0.861	0.841	0.823	0.805	0.789	0.774	0.759	0.745	0.732	0.719	0.708	0.696
100	0.998	0.963	0.935	0.909	0.885	0.864	0.843	0.825	0.807	0.790	0.775	0.760	0.746	0.733	0.720	0.708	0.697
150	0.984	0.970	0.940	0.913	0.888	0.866	0.846	0.826	0.808	0.792	0.776	0.761	0.747	0.733	0.721	0.709	0.697
200	0.979	0.977	0.945	0.917	0.892	0.869	0.848	0.828	0.810	0.793	0.777	0.762	0.748	0.734	0.721	0.709	0.698
250	...	0.972	0.951	0.921	0.895	0.871	0.850	0.830	0.812	0.794	0.778	0.763	0.749	0.735	0.722	0.710	0.698
300	...	0.968	0.957	0.926	0.898	0.874	0.852	0.832	0.813	0.796	0.780	0.764	0.750	0.736	0.723	0.710	0.699
350	...	0.968	0.963	0.930	0.902	0.877	0.854	0.834	0.815	0.797	0.781	0.765	0.750	0.736	0.723	0.711	0.699
400	...	...	0.963	0.935	0.906	0.880	0.857	0.836	0.816	0.798	0.782	0.766	0.751	0.737	0.724	0.712	0.700
450	...	...	0.961	0.940	0.909	0.883	0.859	0.838	0.818	0.800	0.783	0.767	0.752	0.738	0.725	0.712	0.700
500	...	...	0.961	0.946	0.914	0.886	0.862	0.840	0.820	0.801	0.784	0.768	0.753	0.739	0.725	0.713	0.701
550	...	...	0.962	0.952	0.918	0.889	0.864	0.842	0.822	0.803	0.785	0.769	0.754	0.740	0.726	0.713	0.701
600	...	...	0.964	0.958	0.922	0.892	0.867	0.844	0.823	0.804	0.787	0.770	0.755	0.740	0.727	0.714	0.702
650	...	...	0.968	0.958	0.927	0.896	0.869	0.846	0.825	0.806	0.788	0.771	0.756	0.741	0.728	0.715	0.702
700	...	...	...	0.958	0.931	0.899	0.872	0.848	0.827	0.807	0.789	0.772	0.757	0.742	0.728	0.715	0.703
750	...	...	...	0.958	0.936	0.903	0.875	0.850	0.828	0.809	0.790	0.774	0.758	0.743	0.729	0.716	0.703
800	...	...	...	0.960	0.942	0.906	0.878	0.852	0.830	0.810	0.792	0.774	0.759	0.744	0.730	0.716	0.704
850	...	...	...	0.962	0.947	0.910	0.880	0.855	0.832	0.812	0.793	0.776	0.760	0.744	0.730	0.717	0.704
900	...	...	...	0.965	0.953	0.914	0.883	0.857	0.834	0.813	0.794	0.777	0.760	0.745	0.731	0.718	0.705
950	...	...	...	0.969	0.958	0.918	0.886	0.860	0.836	0.815	0.796	0.778	0.761	0.746	0.732	0.718	0.705
1000	...	...	...	0.974	0.959	0.923	0.890	0.862	0.838	0.816	0.797	0.779	0.762	0.747	0.732	0.719	0.706
1050	...	...	...	...	0.960	0.927	0.893	0.864	0.840	0.818	0.798	0.780	0.763	0.748	0.733	0.719	0.707
1100	...	...	...	...	0.962	0.931	0.896	0.867	0.842	0.820	0.800	0.781	0.764	0.749	0.734	0.720	0.707
1150	...	...	...	...	0.964	0.936	0.899	0.870	0.844	0.821	0.801	0.782	0.765	0.749	0.735	0.721	0.708
1200	...	...	...	...	0.966	0.941	0.903	0.872	0.846	0.823	0.802	0.784	0.766	0.750	0.735	0.721	0.708
1250	...	...	...	...	0.969	0.946	0.906	0.875	0.848	0.825	0.804	0.785	0.767	0.751	0.736	0.722	0.709
1300	...	...	...	...	0.973	0.952	0.910	0.878	0.850	0.826	0.805	0.786	0.768	0.752	0.737	0.723	0.709
1350	...	...	...	...	0.977	0.958	0.914	0.880	0.852	0.828	0.807	0.787	0.769	0.753	0.737	0.723	0.710
1400	...	...	...	...	0.982	0.963	0.918	0.883	0.854	0.830	0.808	0.788	0.770	0.754	0.738	0.724	0.710
1450	...	...	...	...	0.987	0.968	0.922	0.886	0.857	0.832	0.809	0.790	0.771	0.754	0.739	0.724	0.711
1500	...	...	...	...	0.993	0.970	0.926	0.889	0.859	0.833	0.811	0.791	0.772	0.755	0.740	0.725	0.711
1550	...	...	...	...	...	0.972	0.930	0.892	0.861	0.835	0.812	0.792	0.773	0.756	0.740	0.726	0.712
1600	...	...	...	...	...	0.973	0.934	0.894	0.863	0.836	0.813	0.792	0.774	0.756	0.740	0.726	0.712
1650	...	...	...	...	...	0.973	0.936	0.895	0.863	0.836	0.812	0.791	0.772	0.755	0.739	0.724	0.710
1700	...	...	...	...	...	0.973	0.938	0.895	0.863	0.835	0.811	0.790	0.771	0.754	0.738	0.723	0.709
1750	...	...	...	...	...	0.974	0.940	0.896	0.862	0.835	0.810	0.789	0.770	0.752	0.736	0.721	0.707
1800	...	...	...	...	...	0.975	0.942	0.897	0.862	0.834	0.810	0.788	0.768	0.751	0.735	0.720	0.705
1850	...	...	...	...	...	0.976	0.944	0.897	0.862	0.833	0.809	0.787	0.767	0.749	0.733	0.718	0.704
1900	...	...	...	...	...	0.977	0.946	0.898	0.862	0.832	0.807	0.785	0.766	0.748	0.731	0.716	0.702
1950	...	...	...	...	...	0.979	0.949	0.898	0.861	0.832	0.806	0.784	0.764	0.746	0.729	0.714	0.700
2000	...	...	...	...	...	0.982	0.952	0.899	0.861	0.831	0.805	0.782	0.762	0.744	0.728	0.712	0.698
2050	...	...	...	...	...	0.985	0.954	0.899	0.860	0.830	0.804	0.781	0.761	0.742	0.726	0.710	0.696
2100	...	...	...	...	...	0.988	0.956	0.900	0.860	0.828	0.802	0.779	0.759	0.740	0.724	0.708	0.694
2150	...	...	...	...	...	...	0.956	0.900	0.859	0.827	0.801	0.778	0.757	0.738	0.722	0.706	0.692
2200	...	...	...	...	...	...	0.955	0.901	0.859	0.826	0.799	0.776	0.755	0.736	0.720	0.704	0.690
2250	...	...	...	...	...	...	0.954	0.901	0.858	0.825	0.797	0.774	0.753	0.734	0.717	0.702	0.687
2300	...	...	...	...	...	...	0.953	0.901	0.857	0.823	0.795	0.772	0.751	0.732	0.715	0.699	0.685
2350	...	...	...	...	...	...	0.952	0.902	0.856	0.822	0.794	0.769	0.748	0.729	0.712	0.697	0.682
2400	...	...	...	...	...	...	0.952	0.902	0.855	0.820	0.791	0.767	0.746	0.727	0.710	0.694	0.679
2450	...	...	...	...	...	...	0.951	0.902	0.854	0.818	0.789	0.765	0.743	0.724	0.707	0.691	0.677
2500	...	...	...	...	...	...	0.951	0.902	0.852	0.816	0.787	0.762	0.740	0.721	0.704	0.688	0.674
2550	...	...	...	...	...	...	0.951	0.902	0.851	0.814	0.784	0.759	0.738	0.718	0.701	0.685	0.671
2600	...	...	...	...	...	...	0.951	0.903	0.849	0.812	0.782	0.756	0.735	0.715	0.698	0.682	0.664
2650	...	...	...	...	...	...	0.952	0.903	0.848	0.809	0.779	0.754	0.731	0.712	0.695	0.679	0.664
2700	...	...	...	...	...	...	0.952	0.903	0.846	0.807	0.776	0.750	0.728	0.708	0.691	0.675	0.661
2750	...	...	...	...	...	...	0.953	0.903	0.844	0.804	0.773	0.747	0.724	0.705	0.687	0.671	0.657
2800	...	...	...	...	...	...	0.956	0.903	0.842	0.801	0.769	0.743	0.721	0.701	0.684	0.668	0.653
2850	...	...	...	...	...	...	0.959	0.902	0.839	0.798	0.766	0.739	0.717	0.697	0.679	0.663	0.649
2900	...	...	...	...	...	...	0.963	0.902	0.836	0.794	0.762	0.735	0.713	0.693	0.675	0.659	0.645
2950	...	...	...	...	...	...	...	0.902	0.834	0.790	0.758	0.731	0.708	0.688	0.671	0.655	0.640
3000	...	...	...	...	...	...	...	0.901	0.831	0.786	0.753	0.726	0.704	0.684	0.666	0.650	0.635
3050	...	...	...	...	...	...	...	0.899	0.827	0.782	0.749	0.722	0.699	0.679	0.661	0.645	0.630
3100	...	...	...	...	...	...	...	0.896	0.823	0.777	0.744	0.716	0.693	0.673	0.656	0.640	0.625
3150	...	...	...	...	...	...	...	0.894	0.819	0.772	0.738	0.711	0.688	0.668	0.650	0.634	0.620
3200	...	...	...	...	...	...	...	0.889	0.815	0.767	0.733	0.705	0.682	0.662	0.644	0.628	0.614

TABLE PG-68.7M
SUPERHEAT CORRECTION FACTOR, K_{sh}

Flowing Pressure (MPa)	Superheat Correction Factor, K_{sh}, Total Temperature, °C, of Superheated Steam																	
	205	225	250	275	300	325	350	375	400	425	450	475	500	525	550	575	600	625
0.50	0.991	0.968	0.942	0.919	0.896	0.876	0.857	0.839	0.823	0.807	0.792	0.778	0.765	0.752	0.74	0.728	0.717	0.706
0.75	0.995	0.972	0.946	0.922	0.899	0.878	0.859	0.841	0.824	0.808	0.793	0.779	0.766	0.753	0.74	0.729	0.717	0.707
1.00	0.985	0.973	0.95	0.925	0.902	0.88	0.861	0.843	0.825	0.809	0.794	0.78	0.766	0.753	0.741	0.729	0.718	0.707
1.25	0.981	0.976	0.954	0.928	0.905	0.883	0.863	0.844	0.827	0.81	0.795	0.781	0.767	0.754	0.741	0.729	0.718	0.707
1.50	...	...	0.957	0.932	0.907	0.885	0.865	0.846	0.828	0.812	0.796	0.782	0.768	0.755	0.742	0.73	0.718	0.708
1.75	...	...	0.959	0.935	0.91	0.887	0.866	0.847	0.829	0.813	0.797	0.782	0.769	0.756	0.743	0.731	0.719	0.708
2.00	...	...	0.96	0.939	0.913	0.889	0.868	0.849	0.831	0.814	0.798	0.784	0.769	0.756	0.744	0.731	0.72	0.708
2.25	...	...	0.963	0.943	0.916	0.892	0.87	0.85	0.832	0.815	0.799	0.785	0.77	0.757	0.744	0.732	0.72	0.709
2.50	...	...	...	0.946	0.919	0.894	0.872	0.852	0.834	0.816	0.8	0.785	0.771	0.757	0.744	0.732	0.72	0.71
2.75	...	...	...	0.948	0.922	0.897	0.874	0.854	0.835	0.817	0.801	0.786	0.772	0.758	0.745	0.733	0.721	0.71
3.00	...	...	...	0.949	0.925	0.899	0.876	0.855	0.837	0.819	0.802	0.787	0.772	0.759	0.746	0.733	0.722	0.71
3.25	...	...	...	0.951	0.929	0.902	0.879	0.857	0.838	0.82	0.803	0.788	0.773	0.759	0.746	0.734	0.722	0.711
3.50	...	...	...	0.953	0.933	0.905	0.881	0.859	0.84	0.822	0.804	0.789	0.774	0.76	0.747	0.734	0.722	0.711
3.75	...	...	...	0.956	0.936	0.908	0.883	0.861	0.841	0.823	0.806	0.79	0.775	0.761	0.748	0.735	0.723	0.711
4.00	...	...	...	0.959	0.94	0.91	0.885	0.863	0.842	0.824	0.807	0.791	0.776	0.762	0.748	0.735	0.723	0.712
4.25	...	...	...	0.961	0.943	0.913	0.887	0.864	0.844	0.825	0.808	0.792	0.776	0.762	0.749	0.736	0.724	0.713
4.50	...	...	...	...	0.944	0.917	0.89	0.866	0.845	0.826	0.809	0.793	0.777	0.763	0.749	0.737	0.725	0.713
4.75	...	...	...	...	0.946	0.919	0.892	0.868	0.847	0.828	0.81	0.793	0.778	0.764	0.75	0.737	0.725	0.713
5.00	...	...	...	...	0.947	0.922	0.894	0.87	0.848	0.829	0.811	0.794	0.779	0.765	0.751	0.738	0.725	0.714
5.25	...	...	...	...	0.949	0.926	0.897	0.872	0.85	0.83	0.812	0.795	0.78	0.765	0.752	0.738	0.726	0.714
5.50	...	...	...	...	0.952	0.93	0.899	0.874	0.851	0.831	0.813	0.797	0.78	0.766	0.752	0.739	0.727	0.714
5.75	...	...	...	...	0.954	0.933	0.902	0.876	0.853	0.833	0.815	0.798	0.782	0.767	0.753	0.739	0.727	0.715
6.00	...	...	...	...	0.957	0.937	0.904	0.878	0.855	0.834	0.816	0.798	0.783	0.768	0.753	0.74	0.727	0.716
6.25	...	...	...	...	0.96	0.94	0.907	0.88	0.856	0.836	0.817	0.799	0.783	0.768	0.754	0.74	0.728	0.716
6.50	...	...	...	...	0.964	0.944	0.91	0.882	0.859	0.837	0.818	0.801	0.784	0.769	0.754	0.741	0.729	0.716
6.75	...	...	...	...	0.966	0.946	0.913	0.885	0.86	0.839	0.819	0.802	0.785	0.769	0.755	0.742	0.729	0.717
7.00	...	...	...	...	...	0.947	0.916	0.887	0.862	0.84	0.82	0.802	0.786	0.77	0.756	0.742	0.729	0.717
7.25	...	...	...	...	...	0.949	0.919	0.889	0.863	0.842	0.822	0.803	0.787	0.771	0.756	0.743	0.73	0.717
7.50	...	...	...	...	...	0.951	0.922	0.891	0.865	0.843	0.823	0.805	0.788	0.772	0.757	0.744	0.73	0.718
7.75	...	...	...	...	...	0.953	0.925	0.893	0.867	0.844	0.824	0.806	0.788	0.772	0.758	0.744	0.731	0.719
8.00	...	...	...	...	...	0.955	0.928	0.896	0.869	0.846	0.825	0.806	0.789	0.773	0.758	0.744	0.732	0.719
8.25	...	...	...	...	...	0.957	0.932	0.898	0.871	0.847	0.827	0.807	0.79	0.774	0.759	0.745	0.732	0.719
8.50	...	...	...	...	...	0.96	0.935	0.901	0.873	0.849	0.828	0.809	0.791	0.775	0.76	0.746	0.732	0.72
8.75	...	...	...	...	...	0.963	0.939	0.903	0.875	0.85	0.829	0.81	0.792	0.776	0.76	0.746	0.733	0.721
9.00	...	...	...	...	...	0.966	0.943	0.906	0.877	0.852	0.83	0.811	0.793	0.776	0.761	0.747	0.734	0.721
9.25	...	...	...	...	...	0.97	0.947	0.909	0.879	0.853	0.832	0.812	0.794	0.777	0.762	0.747	0.734	0.721
9.50	...	...	...	...	...	0.973	0.95	0.911	0.881	0.855	0.833	0.813	0.795	0.778	0.763	0.748	0.734	0.722
9.75	...	...	...	...	...	0.977	0.954	0.914	0.883	0.857	0.834	0.814	0.796	0.779	0.763	0.749	0.735	0.722
10.00	...	...	...	...	...	0.981	0.957	0.917	0.885	0.859	0.836	0.815	0.797	0.78	0.764	0.749	0.735	0.722
10.25	...	...	...	...	...	0.984	0.959	0.92	0.887	0.86	0.837	0.816	0.798	0.78	0.764	0.75	0.736	0.723
10.50	...	...	...	...	...	...	0.961	0.923	0.889	0.862	0.838	0.817	0.799	0.781	0.765	0.75	0.737	0.723
10.75	...	...	...	...	...	...	0.962	0.925	0.891	0.863	0.839	0.818	0.799	0.782	0.766	0.751	0.737	0.724
11.00	...	...	...	...	...	...	0.963	0.928	0.893	0.865	0.84	0.819	0.8	0.782	0.766	0.751	0.737	0.724
11.25	...	...	...	...	...	...	0.964	0.93	0.893	0.865	0.84	0.819	0.799	0.781	0.765	0.75	0.736	0.723
11.50	...	...	...	...	...	...	0.964	0.931	0.894	0.865	0.84	0.818	0.798	0.78	0.764	0.749	0.735	0.722
11.75	...	...	...	...	...	...	0.965	0.932	0.894	0.865	0.839	0.817	0.797	0.78	0.763	0.748	0.734	0.721
12.00	...	...	...	...	...	...	0.966	0.933	0.894	0.864	0.839	0.817	0.797	0.779	0.762	0.747	0.733	0.719
12.25	...	...	...	...	...	...	0.967	0.935	0.895	0.864	0.839	0.816	0.796	0.778	0.761	0.746	0.732	0.718
12.50	...	...	...	...	...	...	0.967	0.936	0.896	0.864	0.838	0.816	0.796	0.777	0.76	0.745	0.731	0.717
12.75	...	...	...	...	...	...	0.968	0.937	0.896	0.864	0.838	0.815	0.795	0.776	0.759	0.744	0.729	0.716
13.00	...	...	...	...	...	...	0.969	0.939	0.896	0.864	0.837	0.814	0.794	0.775	0.758	0.743	0.728	0.715
13.25	...	...	...	...	...	...	0.971	0.94	0.897	0.864	0.837	0.813	0.792	0.774	0.757	0.741	0.727	0.713
13.50	...	...	...	...	...	...	0.972	0.942	0.897	0.863	0.837	0.813	0.792	0.773	0.756	0.74	0.725	0.712
14.00	...	...	...	...	...	...	0.976	0.946	0.897	0.863	0.835	0.811	0.79	0.771	0.753	0.737	0.723	0.709
14.25	...	...	...	...	...	...	0.978	0.947	0.898	0.862	0.834	0.81	0.789	0.77	0.752	0.736	0.721	0.707
14.50	...	...	...	...	...	...	...	0.948	0.898	0.862	0.833	0.809	0.787	0.768	0.751	0.734	0.72	0.706
14.75	...	...	...	...	...	...	...	0.948	0.898	0.862	0.832	0.808	0.786	0.767	0.749	0.733	0.719	0.704
15.00	...	...	...	...	...	...	...	0.948	0.899	0.861	0.832	0.807	0.785	0.766	0.748	0.732	0.717	0.703
15.25	...	...	...	...	...	...	...	0.947	0.899	0.861	0.831	0.806	0.784	0.764	0.746	0.73	0.716	0.702
15.50	...	...	...	...	...	...	...	0.947	0.899	0.861	0.83	0.804	0.782	0.763	0.745	0.728	0.714	0.7
15.75	...	...	...	...	...	...	...	0.946	0.899	0.86	0.829	0.803	0.781	0.761	0.743	0.727	0.712	0.698
16.00	...	...	...	...	...	...	...	0.945	0.9	0.859	0.828	0.802	0.779	0.759	0.741	0.725	0.71	0.696
16.25	...	...	...	...	...	...	...	0.945	0.9	0.859	0.827	0.801	0.778	0.757	0.739	0.723	0.708	0.694
16.50	...	...	...	...	...	...	...	0.945	0.9	0.858	0.826	0.799	0.776	0.756	0.738	0.721	0.706	0.692
16.75	...	...	...	...	...	...	...	0.944	0.9	0.857	0.825	0.797	0.774	0.754	0.736	0.719	0.704	0.69

TABLE PG-68.7M
SUPERHEAT CORRECTION FACTOR, K_{sh} (CONT'D)

Flowing Pressure (MPa)	Superheat Correction Factor, K_{sh} Total Temperature, °C, of Superheated Steam																	
	205	225	250	275	300	325	350	375	400	425	450	475	500	525	550	575	600	625
17.00	...	...	...	...	...	...	...	0.944	0.9	0.856	0.823	0.796	0.773	0.752	0.734	0.717	0.702	0.688
17.25	...	...	...	...	...	...	...	0.944	0.9	0.855	0.822	0.794	0.771	0.75	0.732	0.715	0.7	0.686
17.50	...	...	...	...	...	...	...	0.944	0.9	0.854	0.82	0.792	0.769	0.748	0.73	0.713	0.698	0.684
17.75	...	...	...	...	...	...	...	0.944	0.9	0.853	0.819	0.791	0.767	0.746	0.728	0.711	0.696	0.681
18.00	...	...	...	...	...	...	...	0.944	0.901	0.852	0.817	0.789	0.765	0.744	0.725	0.709	0.694	0.679
18.25	...	...	...	...	...	...	...	0.945	0.901	0.851	0.815	0.787	0.763	0.742	0.723	0.706	0.691	0.677
18.50	...	...	...	...	...	...	...	0.945	0.901	0.85	0.814	0.785	0.761	0.739	0.72	0.704	0.689	0.674
18.75	...	...	...	...	...	...	...	0.945	0.901	0.849	0.812	0.783	0.758	0.737	0.718	0.701	0.686	0.671
19.00	...	...	...	...	...	...	...	0.946	0.901	0.847	0.81	0.781	0.756	0.734	0.715	0.698	0.683	0.669
19.25	...	...	...	...	...	...	...	0.948	0.901	0.846	0.808	0.778	0.753	0.732	0.713	0.696	0.681	0.666
19.50	...	...	...	...	...	...	...	0.95	0.9	0.844	0.806	0.776	0.75	0.729	0.71	0.693	0.677	0.663
19.75	...	...	...	...	...	...	...	0.952	0.899	0.842	0.803	0.773	0.748	0.726	0.707	0.69	0.674	0.66
20.00	...	...	...	...	...	...	...	...	0.899	0.84	0.801	0.77	0.745	0.723	0.704	0.687	0.671	0.657
20.25	...	...	...	...	...	...	...	...	0.899	0.839	0.798	0.767	0.742	0.72	0.701	0.683	0.668	0.654
20.50	...	...	...	...	...	...	...	...	0.899	0.837	0.795	0.764	0.738	0.717	0.697	0.68	0.665	0.651
20.75	...	...	...	...	...	...	...	...	0.898	0.834	0.792	0.761	0.735	0.713	0.694	0.677	0.661	0.647
21.00	...	...	...	...	...	...	...	...	0.896	0.832	0.79	0.758	0.732	0.71	0.691	0.673	0.658	0.643
21.25	...	...	...	...	...	...	...	...	0.894	0.829	0.786	0.754	0.728	0.706	0.686	0.669	0.654	0.64
21.50	...	...	...	...	...	...	...	...	0.892	0.826	0.783	0.75	0.724	0.702	0.682	0.665	0.65	0.636
21.75	...	...	...	...	...	...	...	...	0.891	0.823	0.779	0.746	0.72	0.698	0.679	0.661	0.646	0.631
22.00	...	...	...	...	...	...	...	...	0.887	0.82	0.776	0.743	0.716	0.694	0.674	0.657	0.641	0.627

PG-69 CERTIFICATION OF CAPACITY OF PRESSURE RELIEF VALVES

PG-69.1 Before the Code symbol is applied td any pressure relief valve or power-actuated pressure relieving valve, the valve manufacturer shall have the relieving capacity of his pressure relief valves certified in accordance with the provisions of this paragraph.

PG-69.1.1 Capacity certification tests shall be conducted using dry saturated steam. The limits for test purposes shall be 98% minimum quality and 20°F (l0°C) maximum superheat. Correction from within these limits may be made to the dry saturated condition.

PG-69.1.2 Tests shall be conducted at a place that meets the requirements of A-312.

PG-69.1.3 Capacity test data reports for each pressure relief valve design and size, signed by the manufacturer and Authorized Observer witnessing the tests, together with drawings showing the valve construction, shall be submitted to the ASME designee for review and acceptance.[10]

PG-69.1.4 Capacity certification tests shall be conducted at a pressure that does not exceed the set pressure by 3% or 2 psi (15 kPa), whichever is greater. Pressure relief valves shall be adjusted so that the blowdown does not exceed 4% of the set pressure. For pressure relief valves set at or below 100 psi (700 kPa), the blowdown shall be adjusted so as not to exceed 4 psi (30 kPa). Pressure relief valves used on forced-flow steam generators with no fixed steam and waterline, and pressure relief valves used on high-temperature water boilers shall be adjusted so that the blow down does not exceed 10% of the set pressure. The res eating pressure shall be noted and recorded.

PG-69.1.5 Capacity certification of pilot operated pressure relief valves may be based on tests without the pilot valves installed, provided prior to capacity tests it has been demonstrated by test to the satisfaction of the Authorized Observer that the pilot valve will cause the main valve to open fully at a pressure which does not exceed the set pressure by more than 3% or 2 psi (15 kPa), whichever is greater, and that the pilot valve in combination with the main valve will meet all of the requirements of this Section.

PG-69.1.6 Pressure relief valves for economizer service shall also be capacity certified using water at a temperature between 40°F and 125°F (4°C and 50°C). The pressure relief valves shall be tested without change to the adjustments established in PG-69.1.1 to PG-69.1.4.

PG-69.2 Relieving capacities shall be determined using one of the following methods.

PG-69.2.1 Three Valve Method. A capacity certification test is required on a set of three pressure relief valves for each combination of size, design, and pressure setting. The capacity of each valve of the set shall fall within a range of ±5% of the average capacity. If one of the three pressure relief valves tested falls outside this range, it shall be replaced by two valves, and a new average shall be calculated based on all four valves, excluding the replaced valve. Failure of any of the four capacities to fall within a range of ±5% of the new average shall be cause to refuse certification of that particular valve design.

The rated relieving capacity for each combination of design, size, and test pressure shall be 90% of the average capacity.

[10] Valve capacities are published in "Pressure Relief Device Certifications." This publication may be obtained from the National Board of Boiler and Pressure Vessel Inspectors, 1055 Crupper Ave., Columbus, OR 43299.

TABLE PG-69.2.3
SUPERCRITICAL CORRECTION FACTOR, K_{sc}

Flowing Pressure, psia	Total Temperature, °F, of Supercritical Steam									
	750	800	850	900	950	1,000	1,050	1,100	1,150	1,200
3,208.2	1.059	0.971	0.913	0.872	0.839	0.811	0.788	0.767	0.748	0.731
3,250	1.064	0.975	0.916	0.874	0.841	0.813	0.788	0.767	0.748	0.731
3,300	1.070	0.980	0.919	0.876	0.842	0.814	0.790	0.768	0.749	0.732
3,350	1.077	0.985	0.922	0.878	0.844	0.815	0.791	0.769	0.750	0.732
3,400	1.084	0.990	0.925	0.881	0.846	0.817	0.792	0.770	0.750	0.733
3,450	1.091	0.996	0.929	0.883	0.848	0.818	0.793	0.771	0.751	0.734
3,500	1.100	1.002	0.932	0.885	0.849	0.819	0.794	0.772	0.752	0.734
3,550	1.109	1.008	0.935	0.888	0.851	0.821	0.795	0.773	0.753	0.735
3,600	1.118	1.014	0.939	0.890	0.853	0.822	0.796	0.774	0.754	0.735
3,650	1.129	1.020	0.943	0.893	0.855	0.824	0.797	0.775	0.754	0.736
3,700	1.141	1.027	0.946	0.895	0.857	0.825	0.799	0.775	0.755	0.737
3,750	1.153	1.034	0.950	0.898	0.859	0.827	0.800	0.776	0.756	0.737
3,800	1.168	1.041	0.954	0.900	0.861	0.828	0.801	0.777	0.757	0.738
3,850	1.186	1.048	0.958	0.903	0.862	0.830	0.802	0.778	0.757	0.739
3,900	1.205	1.056	0.962	0.906	0.864	0.831	0.803	0.779	0.758	0.739
3,950	1.227	1.064	0.966	0.908	0.866	0.833	0.804	0.780	0.759	0.740
4,000	1.251	1.072	0.970	0.911	0.868	0.834	0.806	0.781	0.760	0.741
4,050	1.279	1.080	0.974	0.914	0.870	0.836	0.807	0.782	0.760	0.741
4,100	1.310	1.089	0.978	0.916	0.872	0.837	0.808	0.783	0.761	0.742
4,150	1.343	1.098	0.983	0.919	0.874	0.839	0.809	0.784	0.762	0.743
4,200	1.395	1.107	0.987	0.922	0.876	0.840	0.810	0.785	0.763	0.743
4,250	1.444	1.116	0.992	0.925	0.878	0.842	0.812	0.786	0.764	0.744
4,300	1.491	1.125	0.997	0.928	0.881	0.844	0.813	0.787	0.765	0.745
4,350	1.538	1.135	1.002	0.931	0.883	0.845	0.814	0.788	0.765	0.745
4,400	...	1.146	1.007	0.934	0.885	0.847	0.815	0.789	0.766	0.746
4,450	...	1.157	1.012	0.937	0.887	0.848	0.817	0.790	0.767	0.746
4,500	...	1.169	1.017	0.940	0.889	0.850	0.818	0.791	0.768	0.747
4,550	...	1.181	1.022	0.943	0.892	0.852	0.819	0.792	0.768	0.748
4,600	...	1.194	1.027	0.947	0.894	0.853	0.820	0.793	0.769	0.749
4,650	...	1.207	1.033	0.950	0.896	0.855	0.822	0.794	0.770	0.749
4,700	...	1.220	1.038	0.953	0.898	0.857	0.823	0.795	0.771	0.750
4,750	...	1.234	1.044	0.957	0.900	0.858	0.824	0.796	0.772	0.751
4,800	...	1.248	1.050	0.960	0.903	0.860	0.826	0.797	0.773	0.751
4,850	...	1.263	1.056	0.963	0.905	0.862	0.827	0.798	0.774	0.752
4,900	...	1.278	1.062	0.967	0.908	0.863	0.828	0.799	0.774	0.753
4,950	...	1.294	1.069	0.970	0.910	0.865	0.830	0.800	0.775	0.753
5,000	...	1.310	1.075	0.974	0.912	0.867	0.831	0.801	0.776	0.754
5,050	...	1.326	1.082	0.978	0.915	0.869	0.832	0.803	0.777	0.755
5,100	...	1.343	1.088	0.981	0.917	0.871	0.834	0.804	0.778	0.755
5,150	...	1.360	1.095	0.985	0.920	0.872	0.835	0.805	0.779	0.756
5,200	...	1.377	1.102	0.989	0.922	0.874	0.837	0.806	0.780	0.757
5,250	...	1.393	1.109	0.993	0.925	0.876	0.838	0.807	0.780	0.758
5,300	...	1.411	1.116	0.997	0.927	0.878	0.839	0.808	0.781	0.758
5,350	...	1.427	1.123	1.001	0.930	0.880	0.841	0.809	0.782	0.759
5,400	...	1.443	1.131	1.004	0.933	0.882	0.842	0.810	0.783	0.760
5,450	...	1.460	1.139	1.009	0.935	0.884	0.844	0.811	0.784	0.760
5,500	...	1.476	1.146	1.013	0.938	0.886	0.845	0.812	0.785	0.761
5,550	...	1.491	1.154	1.017	0.941	0.887	0.846	0.813	0.786	0.762
5,600	...	1.507	1.162	1.021	0.943	0.889	0.848	0.815	0.787	0.763

TABLE PG-69.2.3
SUPERCRITICAL CORRECTION FACTOR, K_{sc} (CONT'D)

Flowing Pressure, psia	Total Temperature, °F, of Supercritical Steam									
	750	800	850	900	950	1,000	1,050	1,100	1,150	1,200
5,650	...	1.522	1.171	1.025	0.946	0.891	0.849	0.816	0.788	0.763
5,700	...	1.536	1.179	1.030	0.949	0.893	0.851	0.817	0.788	0.764
5,750	...	1.551	1.187	1.034	0.952	0.895	0.852	0.818	0.789	0.765
5,800	...	1.565	1.195	1.038	0.955	0.897	0.854	0.819	0.790	0.765
5,850	...	1.578	1.204	1.043	0.957	0.899	0.855	0.820	0.791	0.766
5,900	...	1.591	1.212	1.047	0.960	0.901	0.857	0.821	0.792	0.767
5,950	...	1.603	1.221	1.052	0.963	0.903	0.858	0.823	0.793	0.768
6,000	...	1.615	1.229	1.057	0.966	0.906	0.860	0.824	0.794	0.768

PG-69.2.2 Slope Method. If a Manufacturer wishes to apply the Code Symbol to a design of pressure relief valves, four valves of each combination of pipe size and orifice size shall be tested. These four valves shall be set at pressures that cover the approximate range of pressures for which the valve will be used or covering the range available at the certified test facility that shall conduct the tests. The capacities based on these four tests shall be as follows:

(a) The slope WIP of the actual measured capacity versus the flow pressure for each test point shall be calculated and averaged

For

$$\text{slope} = \frac{W}{P} = \frac{\text{measured capacity}}{\text{absolute flow rating pressure}}$$

steam

For water

$$\text{slope} = \frac{W}{P} = \frac{\text{measured capacity}}{\sqrt{(\text{flow rating pressure}) - (\text{discharge pressure})}}$$

All values derived from the testing must fall within ±5% of the average value:

minimum slope = 0.95 x average slope

maximum slope = 1.05 x average slope

If the values derived from the testing do not fall between the minimum and maximum slope values, the Authorized Observer shall require that additional valves be tested at the rate of two for each valve beyond the maximum and minimum values with a limit of four additional valves.

For steam applications the relieving capacity to be stamped on the valve shall not exceed 90% of the average slope times the absolute accumulation pressure

rated slope = 0.90 x average slope

For water applications the relieving capacity shall not exceed 90% of the average slope multiplied by the square root of the difference between the flow rating pressure and the valve discharge pressure.

$$\text{rated slope} = 0.9 \times \text{average slope} \times \sqrt{\text{flow rating pressure} - \text{discharge pressure}}$$

(U.S. Customary Units)

stamped capacity ≤ rated slope (1.03 x set pressure + 14.7) or (set pressure + 2 psi + 14.7), whichever is greater

(SI Units)

stamped capacity ≤ rated slope (1.03 x set pressure + 0.101) or (set pressure + 0.015 MPa + 0.101), whichever is greater

TABLE PG-69.2.3M
SUPERCRITICAL CORRECTION FACTOR, K_{SC}

Flowing Pressure, MPa	Total Temperature, °C, of Supercritical Steam										
	400	425	450	475	500	525	550	575	600	625	650
22.12	1.056	0.976	0.922	0.883	0.851	0.824	0.801	0.781	0.762	0.745	0.730
22.25	1.058	0.978	0.924	0.884	0.852	0.825	0.802	0.781	0.763	0.746	0.730
22.50	1.063	0.982	0.926	0.886	0.853	0.826	0.803	0.782	0.763	0.746	0.731
22.75	1.067	0.985	0.929	0.887	0.855	0.827	0.803	0.783	0.764	0.747	0.731
23.00	1.072	0.989	0.931	0.889	0.856	0.828	0.804	0.783	0.764	0.747	0.732
23.25	1.077	0.993	0.934	0.891	0.858	0.830	0.805	0.784	0.765	0.748	0.732
23.50	1.082	0.997	0.937	0.893	0.859	0.831	0.806	0.785	0.766	0.748	0.732
23.75	1.087	1.001	0.939	0.895	0.860	0.832	0.807	0.785	0.766	0.749	0.733
24.00	1.093	1.006	0.942	0.897	0.862	0.833	0.808	0.786	0.767	0.749	0.733
24.25	1.099	1.010	0.945	0.899	0.863	0.834	0.809	0.787	0.768	0.750	0.734
24.50	1.106	1.014	0.948	0.901	0.865	0.835	0.810	0.788	0.768	0.751	0.734
24.75	1.112	1.019	0.950	0.903	0.866	0.836	0.811	0.789	0.769	0.751	0.735
25.00	1.120	1.024	0.953	0.905	0.868	0.837	0.812	0.789	0.769	0.752	0.735
25.25	1.128	1.029	0.956	0.907	0.869	0.839	0.813	0.790	0.770	0.752	0.736
25.50	1.136	1.034	0.959	0.909	0.871	0.840	0.814	0.791	0.771	0.753	0.736
25.75	1.145	1.039	0.962	0.911	0.872	0.841	0.815	0.792	0.771	0.753	0.737
26.00	1.155	1.045	0.966	0.913	0.874	0.842	0.816	0.792	0.772	0.754	0.737
26.25	1.166	1.050	0.969	0.915	0.875	0.843	0.817	0.793	0.773	0.754	0.737
26.50	1.178	1.056	0.972	0.917	0.877	0.845	0.818	0.794	0.773	0.755	0.738
26.75	1.192	1.062	0.975	0.919	0.879	0.846	0.819	0.795	0.774	0.755	0.738
27.00	1.206	1.068	0.979	0.921	0.880	0.847	0.820	0.796	0.775	0.756	0.739
27.25	1.222	1.074	0.982	0.924	0.882	0.848	0.820	0.796	0.775	0.756	0.739
27.50	1.239	1.081	0.985	0.926	0.883	0.850	0.821	0.797	0.776	0.757	0.740
27.75	1.258	1.088	0.989	0.928	0.885	0.851	0.822	0.798	0.777	0.758	0.740
28.00	1.278	1.095	0.992	0.930	0.887	0.852	0.824	0.799	0.777	0.758	0.741
28.25	1.300	1.102	0.996	0.933	0.888	0.854	0.825	0.800	0.778	0.759	0.741
28.50	1.323	1.109	1.000	0.935	0.890	0.855	0.826	0.801	0.779	0.759	0.742
28.75	1.354	1.117	1.004	0.937	0.892	0.856	0.827	0.801	0.779	0.760	0.742
29.00	1.390	1.126	1.007	0.940	0.893	0.857	0.828	0.802	0.780	0.760	0.743
29.25	1.424	1.134	1.011	0.942	0.895	0.859	0.829	0.803	0.781	0.761	0.743
29.50	1.457	1.143	1.015	0.945	0.897	0.860	0.830	0.804	0.781	0.762	0.744
29.75	1.490	1.151	1.019	0.947	0.899	0.861	0.831	0.805	0.782	0.762	0.744
30.00	...	1.158	1.023	0.950	0.900	0.863	0.832	0.806	0.783	0.763	0.745
30.25	...	1.098	1.028	0.952	0.902	0.864	0.833	0.806	0.784	0.763	0.745
30.50	...	1.083	1.032	0.955	0.904	0.865	0.834	0.807	0.784	0.764	0.746
30.75	...	1.090	1.036	0.957	0.906	0.867	0.835	0.808	0.785	0.764	0.746
31.00	...	1.099	1.041	0.960	0.908	0.868	0.836	0.809	0.786	0.765	0.746
31.25	...	1.107	1.046	0.963	0.910	0.870	0.837	0.810	0.786	0.766	0.747
31.50	...	1.115	1.050	0.966	0.911	0.871	0.838	0.811	0.787	0.766	0.748
31.75	...	1.124	1.055	0.968	0.913	0.872	0.839	0.812	0.788	0.767	0.748
32.00	...	1.133	1.060	0.971	0.915	0.874	0.840	0.812	0.788	0.767	0.748
32.25	...	1.142	1.065	0.974	0.917	0.875	0.841	0.813	0.789	0.768	0.749
32.50	...	1.151	1.070	0.977	0.919	0.877	0.843	0.814	0.790	0.769	0.750
32.75	...	1.160	1.075	0.980	0.921	0.878	0.844	0.815	0.791	0.769	0.750
33.00	...	1.170	1.080	0.983	0.923	0.879	0.845	0.816	0.791	0.770	0.750
33.25	...	1.180	1.085	0.986	0.925	0.881	0.846	0.817	0.792	0.770	0.751
33.50	...	1.190	1.091	0.988	0.927	0.882	0.847	0.818	0.793	0.771	0.751
33.75	...	1.201	1.096	0.992	0.929	0.884	0.848	0.819	0.793	0.772	0.752
34.00	...	1.211	1.102	0.995	0.931	0.885	0.849	0.820	0.794	0.772	0.752

TABLE PG-69.2.3M
SUPERCRITICAL CORRECTION FACTOR, K_{SC} (CONT'D)

Flowing Pressure, MPa	Total Temperature, °C, of Supercritical Steam										
	400	425	450	475	500	525	550	575	600	625	650
34.25	...	1.222	1.108	0.998	0.933	0.887	0.850	0.820	0.795	0.773	0.753
34.50	...	1.233	1.114	1.001	0.935	0.888	0.852	0.821	0.796	0.773	0.753
34.75	...	1.244	1.119	1.004	0.937	0.890	0.853	0.822	0.796	0.774	0.754
35.00	...	1.255	1.125	1.007	0.939	0.891	0.854	0.823	0.797	0.775	0.754
35.25	...	1.267	1.131	1.011	0.941	0.893	0.855	0.824	0.798	0.775	0.755
35.50	...	1.278	1.137	1.014	0.944	0.894	0.856	0.825	0.799	0.776	0.755
35.75	...	1.290	1.144	1.017	0.946	0.896	0.858	0.826	0.799	0.776	0.756
36.00	...	1.301	1.150	1.021	0.948	0.898	0.859	0.827	0.800	0.777	0.757
36.25	...	1.313	1.156	1.024	0.950	0.899	0.860	0.828	0.801	0.778	0.757
36.50	...	1.324	1.162	1.027	0.952	0.901	0.861	0.829	0.802	0.778	0.758
36.75	...	1.336	1.169	1.031	0.955	0.902	0.862	0.830	0.802	0.779	0.758
37.00	...	1.347	1.175	1.034	0.957	0.904	0.864	0.831	0.803	0.779	0.759
37.25	...	1.358	1.182	1.038	0.959	0.906	0.865	0.832	0.804	0.780	0.759
37.50	...	1.369	1.188	1.042	0.961	0.907	0.866	0.833	0.805	0.781	0.760
37.75	...	1.380	1.195	1.045	0.964	0.909	0.867	0.834	0.805	0.781	0.760
38.00	...	1.391	1.201	1.049	0.966	0.910	0.868	0.834	0.806	0.782	0.761
38.25	...	1.402	1.208	1.053	0.968	0.912	0.870	0.835	0.807	0.783	0.761
38.50	...	1.412	1.215	1.056	0.971	0.914	0.871	0.836	0.808	0.783	0.762
38.75	...	1.422	1.222	1.060	0.973	0.915	0.872	0.837	0.809	0.784	0.762
39.00	...	1.433	1.228	1.064	0.975	0.917	0.873	0.838	0.809	0.784	0.763
39.25	...	1.443	1.235	1.068	0.978	0.919	0.875	0.839	0.810	0.785	0.763
39.50	...	1.453	1.242	1.072	0.980	0.921	0.876	0.840	0.811	0.786	0.764
39.75	...	1.463	1.248	1.076	0.983	0.922	0.877	0.841	0.812	0.786	0.764
40.00	...	1.472	1.255	1.080	0.985	0.924	0.879	0.842	0.812	0.787	0.765
40.25	...	1.481	1.262	1.084	0.988	0.926	0.880	0.843	0.813	0.788	0.765
40.50	...	1.490	1.268	1.088	0.990	0.928	0.881	0.844	0.814	0.788	0.766
40.75	...	1.499	1.275	1.092	0.993	0.929	0.882	0.845	0.815	0.789	0.766
41.00	...	1.507	1.282	1.096	0.995	0.931	0.884	0.846	0.816	0.790	0.767
41.25	...	1.515	1.288	1.100	0.998	0.933	0.885	0.847	0.816	0.790	0.767

PG-69.2.3 Coefficient of Discharge Method. A coefficient of discharge for the design, *K*, may be established for a specific valve design according to the following procedure:

(a) For each design, the pressure relief valve manufacturer shall submit for test at least three valves for each of three different sizes (a total of nine valves). Each valve of a given size shall be set at a different pressure, covering the range of pressures for which the valve will be used or the range available at the facility where the tests are conducted.

For each valve design where the coefficient of discharge has been determined that is intended to be restricted in lift, the Manufacturer shall have capacity tests conducted on three valves of different sizes. Each size valve shall be tested for capacity at the minimum lift for which certification is required, and at two intermediate lift points between the full rated lift and minimum lift certification points. Each of the three test valves shall be set at a different pressure.

For each valve tested, it shall be verified that actual measured capacity at restricted lift will equal or exceed the rated capacity at full rated lift multiplied by the ratio of measured restricted lift to full rated lift.

(b) Tests shall be made on each pressure relief valve to determine its lift at capacity, popping, and blowdown pressures, and actual relieving capacity. An individual coefficient, K_D, shall be established for each valve as follows:

$$K_D = \frac{\text{actual flow}}{\text{theoretical flow}} = \text{individual coefficient of discharge}$$

Where actual flow is determined by test and theoretical flow, W_T is calculated by one of the following equations:

For tests with dry saturated steam

For 45 deg seat

(U.S. Customary Units)

$W_T = 51.5 \times \pi DLP \times 0.707$

(SI Units)

$W_T = 5.25 \times \pi DLP \times 0.707$

For flat seat

(U.S. Customary Units)

$W_T = 51.5 \times \pi DLP$

(SI Units)

$W_T = 5.25 \times \pi DLP$

For nozzle

(U.S. Customary Units)

$W_T = 51.5\ AP$

(SI Units)

$W_T = 5.25\ AP$

For tests with water

For 45 deg seat

(U.S. Customary Units)

$$W = 1\,135.8\,\frac{0.95}{5.25} \times \frac{dW}{dP}\sqrt{\frac{P}{v}}$$

(SI Units)

$$W_T = 5\,092\ \pi DL\ (0.707)\sqrt{(P - P_d)w}$$

For flat seat

(U.S. Customary Units)

$$W_T = 2{,}407\ \pi DL\sqrt{(P - P_d)w}$$

(SI Units)

$$W_T = 5\,092\ \pi DL\sqrt{(P - P_d)w}$$

For nozzle

(U.S. Customary Units)

$$W_T = 2{,}407\ A\sqrt{(P - P_d)w}$$

(SI Units)

$$W_T = 5\,092\ A\sqrt{(P - P_d)w}$$

where

A = nozzle throat area, in.^{2} (mm^2)
D = seat diameter, in. (mm)
L = lift at pressure *P*, in. (mm)
P = (1.03 X set pressure + 14.7), psia, or
= (set pressure + 2 + 14.7), psia, whichever is greater
= (1.03 X set pressure + 0.101), MPa, or
= (set pressure + 0.014 + 0.101), MPa, whichever is greater
P d = pressure at discharge of the valve, psia (MPa)
WT = theoretical flow, lb/hr (kg/hr)
w = specific weight of water at inlet conditions, lb/ft^3 (kg/m^3)

To convert lb/hr of water to gal/min of water, multiply the capacity in lb/hr by 1/500, To convert kg/hr of water to liter/min of water, multiply the capacity in liter/min by 1/60.

The average of the coefficients K_D of the nine tests required shall be multiplied by 0.90, and this product shall be taken as the coefficient *K* of that design. All individual coefficients of discharge, K_D, shall fall within a range of ±5% of the average coefficient found. If a valve fails to meet this requirement, the Authorized Observer shall require two additional valves to be tested as replacements for each valve having an individual coefficient, K_D, outside the ±5% range, with a limit of four additional valves. Failure of a coefficient, K_D, to fall within ±5% of the new average value, excluding the replaced valve(s), shall be cause to refuse certification of that particular valve design.

The rated relieving capacity of all sizes and set pressures of a given design, for which *K* has been established under the provision of this paragraph, shall be determined by the equation:

$$W \le W_T \times K$$

where

K = coefficient of discharge for the design
W = rated relieving capacity, lb/hr (kg/hr)
W_T = theoretical flow, defined by the same equation used to determine K_D, lb/hr (kg/hr)

The coefficient of discharge for the design shall be not greater than 0.878 (the product of 0.9 x 0.975). The coefficient shall not be applied to valves whose beta ratio (ratio of valve throat to inlet diameter) lies outside the range of 0.15 to 0.75, unless tests have demonstrated that the individual coefficient of discharge, K_D, for valves at the extreme ends of a larger range, is within ±5% of the average coefficient, K_D.

For designs where the lift is used to determine the flow area, all valves shall have the same nominal lift to seat diameter ratio (*L*/*D*).

For pressures over 1,500 psig (10.3 MPa) and up to 3,200 psig (22.1 MPa), the value of *W* shall be multiplied by the correction factor:

(U.S. Customary Units)

$$\frac{0.1906P - 1{,}000}{0.2292P - 1{,}061}$$

(SI Units)

$$\frac{27.6P - 1\,000}{33.2P - 1\,061}$$

For pressures over 3,200 psig (22.1 MPa), the value of W shall be multiplied by the appropriate supercritical correction factor, K_{sc}, from Table PG-69.2.3.

PG-69.3 If a manufacturer wishes to apply the Code symbol to a power-actuated pressure relieving valve under PG-67.4.1, one valve of each combination of inlet pipe size and orifice size to be used with that inlet pipe size shall be tested. The valve shall be capacity tested at four different pressures approximately covering the range of the certified test facility on which the tests are conducted. The capacities, as determined by these four tests, shall be plotted against the absolute flow test pressure and a line drawn through these four test points. All points must lie within ±5% in capacity value of the plotted line and must pass through 0-0. From the plotted line, the slope of the line dW/dP shall be determined and a factor of (0.90/51.45) x (dW/dP) shall be applied to capacity computations in the supercritical region at elevated pressures by means of the isentropic flow equation.

(U.S. Customary Units)

$$W = 1{,}135.8\,\frac{0.90}{51.45} \times \frac{dW}{dP}\sqrt{\frac{P}{v}}$$

(SI Units)

$$W = 1\,135.8\,\frac{0.95}{5.25} \times \frac{dW}{dP}\sqrt{\frac{P}{v}}$$

where

dW/dP = rate of change of measured capacity with respect to absolute pressure

P = absolute inlet pressure, psia (MPa)

v = inlet specific volume, ft^3/lb (m^3/kg)

W = capacity, lb of steam/hr (kg/hr)

NOTE: The constant 1,135.8 is based on a γ factor of 1.30, which is accurate for superheated steam at temperature above approximately 800°F (430°C). In interest of accuracy, other methods of capacity computations must be used at temperatures below 800°F (430°C) at supercritical pressures.

PG-69.4 Power-actuated pressure relieving valves, having capacities certified in accordance with the provision of PG-69.3 and computed in accordance with the formula contained therein, shall be marked as required by PG-110 with the computed capacity, corresponding to 3% above the full load operating pressure and temperature conditions at the valve inlet when the valve is operated by the controller, and they shall also be stamped with the set pressure of the controller. When the valve is marked as required by this paragraph, it shall be the guarantee by the manufacturer that the valve also conforms to the details of construction herein specified.

PG-69.6 When changes are made in the design of a safety or safety relief valve in such a manner as to affect the flow path, lift, or performance characteristics of the valve, new tests in accordance with this Section shall be performed.

PG-70 CAPACITY OF PRESSURE RELIEF VALVES

PG-70.1 Subject to the minimum number required by PG-67.1, the number of pressure relief valves required shall be determined on the basis of the maximum designed steaming capacity, as determined by the boiler Manufacturer, and the relieving capacity marked on the valves by the manufacturer.

PG-71 MOUNTING OF PRESSURE RELIEF VALVES

PG-71.1 When two or more pressure relief valves are used on a boiler, they may be mounted either separately or as twin valves made by placing individual valves on Y-bases, or duplex valves having two valves in the same body casing. Twin valves made by placing individual valves on Y-bases, or duplex valves having two valves in the same body, shall be of approximately equal capacity.

When not more than two valves of different sizes are mounted singly the relieving capacity of the smaller valve shall be not less than 50% of that of the larger valve.

PG-71.2 The pressure relief valve or valves shall be connected to the boiler independent of any other connection, and attached as close as possible to the boiler or the normal steam flow path, without any unnecessary intervening pipe or fitting. Such intervening pipe or fitting shall be not longer than the face-to-face dimension of the corresponding tee fitting of the same diameter and pressure under the applicable ASME Standard listed in PG-42 and shall also comply with PG-8 and PG-39. Every pressure relief valve shall be connected so as to stand in an upright position, with spindle vertical. On high-temperature water boilers of the watertube forced-circulation type, the valve shall be located at the boiler outlet.

PG-71.3 The opening or connection between the boiler and the pressure relief valve shall have at least the area of the valve inlet. No valve of any description shall be placed between the required pressure relief valve or valves and the boiler, nor on the discharge pipe between the pressure relief valve and the atmosphere. When a discharge pipe is used, the cross-sectional area shall be not less than the full area of the valve outlet or of the total of the areas of the valve outlets, discharging thereinto. It shall be as short and straight as possible and so arranged as to avoid undue stresses on the valve or valves.

All pressure relief valve discharges shall be so located or piped as to be carried clear from running boards or platforms. Ample provision for gravity drain shall be made in the discharge pipe at or near each pressure relief valve, and where water of condensation may collect. Each valve shall have an open gravity drain

through the casing below the level of the valve seat. For iron- and steel-bodied valves exceeding NPS 2 ½ (DN 65), the drain hole shall be tapped not less than NPS ⅜ (DN 10).

Discharge piping from pressure relief valves on high temperature water boilers shall be provided with adequate provisions for water drainage as well as the steam venting.

The installation of cast iron bodied pressure relief valves for high-temperature water boilers is prohibited.

PG-71.4 If a muffler is used on a pressure relief valve, it shall have sufficient outlet area to prevent back pressure from interfering with the proper operation and discharge capacity of the valve. The muffler plates or other devices shall be so constructed as to avoid a possibility of restriction of the steam passages due to deposit. Mufflers shall not be used on high-temperature water boiler pressure relief valves.

When a pressure relief valve is exposed to outdoor elements that may affect operation of the valve, it is permissible to shield the valve with a satisfactory cover. The shield or cover shall be properly vented and arranged to permit servicing and normal operation of the valve.

PG-71.5 When a boiler is fitted with two or more pressure relief valves on one connection, this connection to the boiler shall have a cross-sectional area not less than the combined areas of inlet connections of all the pressure relief valves with which it connects and shall also meet the requirements of PG-71.3.

PG-71.6 Pressure relief valves may be attached to drums or headers by welding provided the welding is done in accordance with Code requirements.

PG-71.7 Every boiler shall have proper outlet connections for the required pressure relief valve, or valves, independent of any other outside steam connection,. the area of opening to be at least equal to the aggregate areas of inlet connections of all of the pressure relief valves to be attached thereto. An internal collecting pipe, splash plate, or pan may be used, provided the total area for inlet of steam thereto is not less than twice the aggregate areas of the inlet connections of the attached pressure relief valves. The holes in such collecting pipes shall be at least ¼ in. (6 mm) in diameter and the least dimension in any other form of opening for inlet of steam shall be ¼ in. (6 mm).

Such dimensional limitations to operation for steam need not apply to steam scrubbers or driers provided the net free steam inlet area of the scrubber or drier is at least 10 times the total area of the boiler outlets for the pressure relief valves.

PG-71.8 If pressure relief valves are attached to a separate steam drum or dome, the opening between the boiler proper and the steam drum or dome shall be not less than required by PG-71.7.

PG-72 OPERATION OF PRESSURE RELIEF VALVES

PG-72.1 Pressure relief valves shall be designed and constructed to operate without chattering, with a minimum blowdown of 2 psi (15 kPa) or 2% of the set pressure, whichever is greater, and to attain full lift at a pressure not greater than 3% above their set pressure. Pressure relief valves used on forced-flow steam generators with no fixed steam and waterline, and pressure relief valves used on high-temperature water boilers must be marked for these special services by the valve Manufacturer or Assembler.

PG-72.2 The set pressure tolerance plus or minus shall not exceed that specified in the following table:

Set Pressure, psi (MPa)	Tolerance, Plus or Minus From Set Pressure
≤ 70 (0.5)	2 psi (15 kPa)
> 70 (0.5) and ≤ 300 (2.1)	3% of set pressure
> 300 (2.1) and ≤ 1,000 (7.0)	10 psi (70 kPa)
> 1,000 (7.0)	1% of set pressure

PG-72.3 The spring in a pressure relief valve shall not be reset for any pressure more than 5% above or below that for which the valve is marked unless the new setting is within the spring design range established by the manufacturer or is determined to be acceptable to the manufacturer.

If the set pressure is to be adjusted within the limits specified above, the adjustment shall be performed by the manufacturer, his authorized representative, or an assembler. An additional valve data tag identifying the new set pressure, capacity, and date shall be furnished and installed, and the valve shall be resealed.

PG-72.4 If the set pressure of a valve is changed so as to require a new spring, the spring shall be acceptable to the manufacturer. The spring installation and valve adjustment shall be performed by the manufacturer, his authorized representative, or an assembler. A new nameplate as described in PG-110 shall be furnished and installed, and the valve shall be resealed.

PG-73 MINIMUM REQUIREMENTS FOR PRESSURE RELIEF VALVES

PG-73.1 Permissible Pressure Relief Valves

PG-73.1.1 Pressure relief valves shall be either direct spring-loaded safety valves, direct spring-loaded safety relief valves, or pilot-operated pressure relief valves.

PG-73.1.2 Power-actuated pressure relieving valves shall only be used for applications specified in PG-67.4.1.

PG-73.1.3 Deadweight or weighted lever safety valves or safety relief valves shall not be used.

PG-73.1.4 Unless otherwise defined, the definitions relating to pressure relief devices in ASME PTC 25 shall apply.

PG-73.2 Minimum Requirements

PG-73.2.1 All pressure relief valves shall be so constructed that the failure of any part cannot obstruct the free and full discharge of steam and water from the valve. Pressure relief valves shall have the seat inclined at any angle between 45 deg and 90 deg, inclusive, to the centerline of the disk.

PG-73.2.2 The design shall incorporate guiding arrangements necessary to insure consistent operation and tightness.

PG-73.2.3 The spring shall be designed so that the full lift spring compression shall be no greater than 80% of the nominal solid deflection. The permanent set of the spring (defined as the difference between the free height and height measured 10 min after the spring has been compressed solid three additional times after presetting at room temperature) shall not exceed 0.5 % of the free height.

PG-73.2.4 To provide a means for verifying whether it is free, each safety valve or safety relief valve shall have a substantial lifting device, which when activated will release the seating force on the disk when the valve is subjected to pressure of at least 75% of the set pressure. The lifting device shall be such that it cannot lock or hold the valve disk in lifted position when the exterior lifting force is released. Disks of pressure relief valves used on high-temperature water boilers shall not be lifted while the temperature of the water exceeds 200°F (93°C). If it is desired to lift the valve disk to assure that it is free, this shall be done when the valve is subjected to a pressure of at least 75% of the set pressure. Pilot-operated pressure relief valves shall be provided with either a lifting device as described above or means for connecting and applying pressure to the pilot adequate to verify that the moving parts critical to proper operations are free to move. For high-temperature water boilers, the lifting mechanism shall be sealed against leakage.

PG-73.2.5 The seat of a pressure relief valve shall be fastened to the body of the valve in such a way that there is no possibility of the seat lifting.

PG-73.2.6 A body drain below seat level shall be provided in the valve and this drain shall not be plugged during or after field installation. For valves exceeding NPS 2 ½ (DN 65), the drain hole or holes shall be tapped not less than NPS ⅜ (D N 10). For valves of NPS 2 ½ (DN 65) or smaller, the drain hole shall not be less than ¼ in. (6 mm) in diameter.

PG-73.2.7 In the design of the body of the valve, consideration shall be given to minimizing the effects of water deposits.

PG-73.2.8 Valves having screwed inlet or outlet connections shall be provided with wrenching surfaces to allow for normal installation without damaging operating parts.

PG-73.2.9 Means shall be provided in the design of all valves for use under this Section, for sealing all external adjustments. Seals shall be installed by the manufacturer, his authorized representative, or an assembler at the time of the initial adjustment. After spring replacement and/or subsequent adjustment, the valve shall be resealed. Seals shall be installed in such a manner as to prevent changing the adjustment without breaking the seal and, in addition, shall serve as a means of identifying the manufacturer, his authorized representative, or the assembler making the adjustment.

PG-73.2.10 Valve capacity may be restricted by restricting the lift of a valve provided the following requirements are met:

(a) The valve size shall be NPS ¾ (DN 20) or larger.

(b) No changes shall be made in the design of the valve except to change the valve lift by use of a lift restraining device described in (c) below.

(c) The restriction of valve capacity shall be permitted only by the use of a lift restraining device which shall limit valve lift and shall not otherwise interfere with flow through the valve. The design of the lift restraining device shall be subject to review by an ASME designee.

(d) The lift restraining device shall be designed so that, if adjustable, the adjustable feature can be sealed. Seals shall be installed by the valve Manufacturer or Assembler at the time of initial adjustment.

(e) Valves shall not have their lifts restricted to a value less than 30% of full rated lift, or 0.080 in. (2 mm).

(f) When sizing and selecting valves, the restricted lift nameplate capacity shall be determined by multiplying the capacity at full rated lift by the ratio of the restricted lift to the full rated lift.

PG-73.2.11 A pressure relief valve over NPS 3 (DN 80), used for pressure greater than 15 psig (100 kPa), shall have a flanged inlet connection or a welded inlet connection. The dimensions of the flanges subjected to boiler pressure shall conform to the applicable ASME standards as given in PG-42. The facing shall be similar to those illustrated in the standard.

PG-73.2.12 The pilot sensing line of pilot-operated pressure relief valves shall be adequately protected from freezing.

PG-73.3 Material Selections

PG-73.3.1 Cast iron seats and disks are not permitted.

PG-73.3.2 Adjacent sliding surfaces such as guides and disks or disk holders shall both be of corrosion-resistant material. Springs of corrosion-resistant material or having a corrosion-resistant coating are required. The seats and disks of pressure relief valves shall be of suitable material to resist corrosion by the lading fluid.

NOTE: The degree of corrosion resistance, appropriate to the intended service, shall be a matter of agreement between the manufacturer and the purchaser.

PG-73.3.3 Materials used in bodies and bonnets or yokes shall be listed in Section II, Parts A and B, and identified in Tables 1A and 1B of Section II Part D, as permitted for Section I construction. Materials used in body to bonnet or body to yoke bolting shall be listed in

ASME B16.34. Materials used in all other parts required for the pressure relieving or retaining function shall be

(a) listed in ASME Section II

(b) listed in ASTM Specifications (see Note below) or

(c) controlled by the manufacturer of the pressure relief valve by a specification ensuring control of chemical and physical properties and quality at least equivalent to ASTM Standards (see Note below)

PG-73.3.4 Pressure relief valves may have bronze parts complying with either SB-61, SB-62" or SB-148, provided the maximum allowable stresses and temperatures do not exceed the values given in Table 1B of Section II, Part D, and shall be marked to indicate the class of material used. Such valves shall not be used on superheaters delivering steam at a temperature over 450°F (230°C) for SB-61 and SB-148, and 306°F (I50°C) for SB-62, and shall not be used for high-temperature water boilers.

NOTE: It shall be the manufacturer's responsibility to ensure that the allowable stresses at temperature meet the requirements of Section II, Part D, Appendix 1, Mandatory Basis for Establishing Stress Values in Tables 1A and 1B.

PG-73.4 Inspection of Manufacturing and/or Assembly

PG-73.4.1 A manufacturer shall demonstrate to the satisfaction of an ASME designee that his manufacturing, production, and test facilities and quality control procedures will ensure close agreement between the performance of random production samples and the performance of those valves submitted for capacity certification.

PG-73.4.2 Manufacturing, assembly, inspection, and test operations including capacity, are subject to inspections at any time by an ASME designee.

PG-73.4.3 A Manufacturer or Assembler may be granted permission to apply the V Code Symbol to production pressure relief valves capacity-certified in accordance with PG-69, provided the following tests are successfully completed. This permission shall expire on the sixth anniversary of the date it is initially granted. This permission may be extended for 6-yr periods if the following tests are successfully repeated within the 6-mo period before expiration.

(a) Two sample production pressure relief valves of a size and capacity within the capability of an ASME accepted laboratory shall be selected by an ASME designee. The maximum blowdown for these samples shall not exceed the value specified in the following table:

Set Pressure, psi (MPa)	Maximum Blowdown
< 67 (500)	4 psi (30 kPa)
≥ 67 (500) and ≤ 250 (1 700)	6% of set pressure
> 250 (1 700) and < 375 (2 500)	15 psi (100 kPa)
≥ 375 (2 500)	4% of set pressure

The blow down for sample valves designed for use on forced flow steam generators with no fixed steam and waterline or high-temperature water boilers shall not exceed 10% of the set pressure.

(b) Operational and capacity tests shall be conducted in the presence of an ASME designee at an ASME-accepted laboratory .. The valve manufacturer or assembler shall be notified of the time of the test and may have representatives present to witness the test.

(c) Should any valve fail to relieve at or above its certified capacity or should it fail to meet performance requirements in PG-72, the test shall be repeated at the rate of two replacement valves, selected in accordance with PG-73.4.3(a), for each valve that failed.

(d) Failure of any of the replacement valves to meet capacity or the performance requirements of this Section shall be cause for revocation within 60 days of the authorization to use the Code symbol on that particular t type of valve. During this period, the Manufacturer or assembler shall demonstrate the cause of such deficiency and the action taken toward against future occurrence.

PG-73.4.4 Use of the Code Symbol Stamp by an assembler indicates the use of original unmodified parts in strict accordance with the instructions of the manufacturer of the valve.

(a) An assembler may transfer original and unmodified pressure relief parts produced by the Manufacturer to other Assemblers, provided the following conditions are met:

(1) both Assemblers have been granted permission to apply the V or UV Code Symbol to the specific valve type in which the parts are to be used

(2) the Quality Control System of the Assembler receiving the pressure relief valve parts shall define the controls for the procurement and acceptance of those parts

(3) the pressure relief valve parts are appropriately packaged, marked, or sealed by the Manufacturer to ensure that the parts are

(a) produced, by the Manufacturer

(b) the parts are original and unmodified

(b) However, an assembler may convert original finished parts by either machining to another finished part or applying a corrosion-resistant coating to valve springs for a specific application under the following conditions:

(1) Conversions shall be specified by the Manufacturer. Drawings and/or written instructions used for part conversion shall be obtained from the Manufacturer and shall include a drawing or description of the converted part before and after the conversion.

(2) The Assembler's quality control system, as accepted by a representative from an ASME-designated organization, must describe in detail the conversion of original parts, provisions for inspection and acceptance, personnel training, and control of current Manufacturer's drawings and/or written instructions.

(3) The Assembler must document each use of a converted part.

(4) The Assembler must demonstrate to the Manufacturer the ability to perform each type of conversion. The Manufacturer shall document all authorizations granted to perform part conversions. The Manufacturer and Assembler shall maintain a file of such authorizations.

(5) For an Assembler to offer restricted lift valves, the Assembler must demonstrate to the satisfaction of the Manufacturer the ability to perform valve lift restrictions. The Manufacturer shall document all authorizations granted to restrict the lift of the valves, and shall maintain records of the lift restrictions made by the Assembler. The Assembler shall maintain a file of such authorizations.

(6) At least annually a review shall be performed by the Manufacturer of an Assembler's system and conversion capabilities. The Manufacturer shall document the results of these reviews. A copy of this documentation shall be kept on file by the Assembler. The review results shall be made available to a representative from an ASME designated organization.

NOTE: Within the requirements of PG-73.4 and PG-73.5, a *manufacturer* is defined as a person or organization who is completely responsible for design, material selection, capacity certification, manufacture of all component parts, assembly, testing, sealing, and shipping of pressure relief valves certified under this Section.

An *assembler* is defined as a person or organization who purchases or receives from a manufacturer the necessary component parts or valves and assembles, adjusts, tests, seals, and ships pressure relief valves certified under this Section at a geographical location other than and using facilities other than those used by the manufacturer.

PG-73.5 Testing by Manufacturers or Assemblers

PG-73.5.1 Pressure Testing. Each pressure relief valve to which the Code Symbol Stamp is to be applied shall be subjected to the following tests by the Manufacturer or Assembler:

(a) The pressure-containing parts of each valve shall be hydrostatically tested at a pressure at least 1.5 times the design pressure of the parts. Parts meeting the following criteria shall be exempt from pressure testing:

(1) the applied stress under hydrostatic test conditions does not exceed 50% of the allowable stress; and

(2) the part is not cast or welded.

(b) Alternatively, testing may be performed pneumatically at a pressure 1.25 times the design pressure of the part. Pneumatic testing can be hazardous; it is therefore recommended that special precautions be taken when conducting a pneumatic test.

(c) Testing may be done in the component or assembled condition.

(d) When the valve is designed for discharging directly to atmosphere, the valve components downstream of the valve disk are exempt from pressure testing.

(e) Valve components downstream of the disk and fully contained within the body are exempt from pressure testing.

(f) These tests shall be conducted after all machining and welding operations on the parts have been completed.

(g) There shall be no sign of leakage.

PG-73.5.2 Every valve shall be tested with steam by the manufacturer or assembler to demonstrate its set point and pressure-containing integrity. The blowdown control elements of the pressure relief valve shall be set to the Manufacturer's specifications.

PG-73.5.2.1 Tests shall be conducted either on equipment that meets the requirements of PG-73.5.6, or on the boiler, by raising the pressure to demonstrate the set pressure.

PG-73.5.2.2 When the valve is beyond the production test equipment capabilities, an alternative test method presented in PG-73.5.2.2.1 or PG-73.5.2.2.2 may be used, provided all of the following conditions are met:

(a) testing the valve at full pressure may cause damage to the valve, or testing of the valve is impractical due to boiler system operational safety considerations

(b) the valve lift has been mechanically verified to meet or exceed the required lift

(c) the blow down control elements of the safety valve are set to the valve manufacturer's specification

(d) the valve design is compatible with the alternative test method selected

PG-73.5.2.2.1 The valve, with its lift temporarily restricted during the test, if required to prevent valve damage, shall be tested on steam to demonstrate set pressure.

PG-73.5.2.2.2 The valve may be fitted with a hydraulic or pneumatic lift assist device and tested on steam at a pressure less than the valve set pressure. The lift assist device and test procedure shall be calibrated to provide the set pressure setting within the tolerance of PG-72.2.

PG-73.5.3 Leak Test

(a) A seat tightness test shall be conducted at maximum expected operating pressure but at a pressure not exceeding the reseating pressure of the valve. When being tested, a valve exhibiting no sign of leakage shall be considered adequately tight.

(b) Closed bonnet pressure relief valves designed for discharge to a closed system shall be tested with a minimum of 30 psig (200 kPa) air or other gas in the secondary pressure zone. There shall be no sign of leakage. [11]

PG-73.5.4 A manufacturer or assembler shall have a documented program for the application, calibration, and maintenance of test gages.

[11] The user may specify a higher test pressure commensurate with the back pressure anticipated in service.

PG-73.5. Testing time on steam valves shall be sufficient to assure that test results are repeatable and representative of field performance.

PG-73.5.6 Test fixtures and test drums, where applicable, shall be of adequate size and capacity to assure that the observed set pressure is consistent with the stamped . set pressure within the tolerance required by PG-72.2.

PG-73.6 Design Requirements. At the time of submission of valves for capacity certification or testing in accordance with PG-69, the ASME designee has the authority to review design for conformity with the requirements of this Section and to reject or require modification of designs that do not conform, prior to capacity testing.

PG-73.7 Code Symbol "V" Stamp. Each pressure relief valve to which the Code "V" symbol (see Fig. PG-105.4) will be applied shall have been fabricated or assembled by a manufacturer or assembler holding a valid Certificate of Authorization (PG-105.2) and c capacity certified in accordance with the requirements of this Section. A Certified Individual (CI) shall provide oversight to assure that each use of the Code "V" symbol on a pressure relief valve is in accordance with the requirements of this Section, and that each use of the Code "V" symbol is documented on a Certificate of Conformance, Form P-8.

PG-73.7.1 Requirements for the Certified Individual (CI). The CI shall

(a) be an employee of the manufacturer or assembler

(b) be qualified and certified by the manufacturer or assembler. Qualifications shall include as a minimum

(1) knowledge of the requirements of this Section for the application of the Code "V" symbol

(2) knowledge of the manufacturer's or assembler's quality program

(3) training commensurate with the scope, complexity, or special nature of the activities to which oversight is to be provided

(c) have a record, maintained and certified by the manufacturer or assembler, containing objective evidence of the qualifications of the CI and the training program provided

PG-73.7.2 Duties of the Certified Individual (CI). The CI shall

(a) verify that each item to which the Code "V" symbol is applied has a current capacity certification and meets all applicable requirements of this Section

(b) review documentation for each lot of items to be stamped to verify, for the lot, that requirements of this Section have been completed

(c) sign the Certificate of Conformance, Form P-8, prior to release of control of the pressure relief valves

PG-73.7.3 Certificate of Conformance, Form P-8

(a) The Certificate of Conformance, Form P-8, shall be filled out by the manufacturer or assembler and signed by the Certified Individual. Multiple duplicate pressure relief valves may be recorded as a single entry, provided the valves are identical and are produced in the same lot.

(b) The manufacturer's or assembler's written quality control program shall include requirements for completion of Certificates of Conformance, Form P-8, and retention, by the manufacturer or assembler, for a minimum of 5 years.

FABRICATION

PG-75 GENERAL

The fabrication of boilers and parts thereof shall conform to the general fabrication requirements in the following paragraphs and in addition to the specific requirements for fabrication in the Parts of this Section that pertain to the methods of construction used.

PG-76 CUTTING PLATES AND OTHER STOCK

PG-76.1 Plates may be cut by machining, punching, shearing, or cutting by the electric arc or gas process, providing enough metal is left at any unfinished edges to meet the requirements of PG-79.

PG-76.2 When end faces of nozzle or manhole necks are to remain unwelded in the completed vessel, these end faces shall not be cut by shearing unless at least 1/8 in. (3 mm) of additional metal is removed by any method that will produce a smooth finish.

PG-91 QUALIFICATION OF INSPECTORS

The inspection required by this Section shall be by an Inspector employed by an ASME accredited Authorized Inspection Agency,[12] that is, the inspection organization of a state or municipality of the United States, a Canadian province, or of an insurance company authorized to write boiler and pressure vessel insurance. These Inspectors shall have been qualified by written examination under the rules of any state of the United States or province of Canada which has adopted the Code.

PG-93 INSPECTION AND REPAIR OF FLAT PLATE IN CORNER JOINTS

PG-93.1 When flat plate greater than ½ in. (13 mm) thickness is welded to other pressure parts to form a corner joint, such as in flat heads [Fig.PG-31, illustrations (g), (i-1), and (i-2)], waterlegs of firebox boilers or combustion chambers of wetback boilers [Fig. A-8, illustrations (l), (m), (n), and (p)], and the exposed edges of the plate are closer to the edge of the weld than a distance equal to the thickness of the plate, the peripheral plate edges and any remaining edges and any remaining exposed surface of the weld joint preparation

[12] Whenever *Authorized Inspection Agency* or *AIA* is used in this Code, it shall mean an Authorized Inspection Agency accredited by ASME in accordance with the requirements in the latest edition of ASME QAI-l, Qualification for Authorized Inspection.

shall be examined after welding by either the magnetic particle or liquid penetrant method. When the plate is nonmagnetic, only the liquid penetrant method shall be used. The requirements of this paragraph shall not apply to those joints when 80% or more of the pressure load is carried by tubes, stays, or braces, or when the exposed edges of the plate are farther from the edge of the weld than a distance equal to the thickness of the plate.

PG-93.2 Laminations, cracks, or other imperfections found during the examination required by PG-93.1 that would affect the safety of the vessel shall be repaired in accordance with PG-78. The imperfection(s) may be pursued by any suitable method (grinding, chipping, etc.). The repaired area shall be subjected to the same examination that first revealed the imperfection.

PG-93.3 Methods and acceptance criteria for magnetic particle and liquid penetrant examination shall be in accordance with A-260 or A-270, respectively.

PG-99HYDROSTATIC TEST

Hydrostatic testing of the completed boiler unit shall be conducted in accordance with the following requirements:

After a boiler has been completed (see PG-104), it shall be subjected to pressure tests using water at not less than ambient temperature, but in no case less than 70°F (20°C). Where required, test pressures are specified in this paragraph; whether minimum or maximum pressures, they apply to the highest point of the boiler system. When the boiler is completed in the Manufacturer's shop without boiler external piping, subsequent hydrostatic testing of the boiler external piping shall be the responsibility of any holder of a valid "S," "A," or "PP" stamp. The safety valves need not be included in the hydrostatic test. The tests shall be made in two stages in the following sequence:

PG-99.1 Hydrostatic pressure tests shall be applied by raising the pressure gradually to not less than 1 ½ times the maximum allowable working pressure as shown on the data report to be stamped on the boiler. No part of the boiler shall be subjected to a general membrane stress greater than 90% of its yield strength (0.2% offset) at test temperature. The primary membrane stress to which boiler components are subjected during hydrostatic test shall be taken into account when designing the components. Close visual inspection for leakage is not required during this stage.

PG-99.2 The hydrostatic test pressure may then be reduced to the maximum allowable working pressure, as shown on the Data Report, to be stamped on the boiler and maintained at this pressure while the boiler is carefully examined. The metal temperature shall not exceed 120°F (50°C) during the close examination.

PG-99.3 A completed forced-flow steam generator with no fixed steam and waterline, having pressure parts designed for different pressure levels along the path of water-steam flow, shall be subjected to a hydrostatic pressure test by the above procedure (PG-99.1 and PG-99.2) based upon:

PG-99.3.1 For the first stage test (PG-99.1) a hydrostatic test pressure of not less than 1 ½ times the maximum allowable working pressure at the superheater outlet as shown in the master stamping (PG-106.3) but no less than 1 ¼ times the maximum allowable working pressure of any part of the boiler, excluding the boiler external piping.

PG-99.3.2 For the second stage test (PG-99.2) the hydrostatic test pressure may be reduced to not less than the maximum allowable working pressure at the superheater outlet.

PG-99.4 Test Gages

PG-99.4.1 An indicating gage, visible to the operator controlling the pressure applied, shall be connected to the pressure parts. Hydrostatic head on the gage shall be considered such that the required test pressure is achieved at the top of the boiler.

PG-99.4.2 Dial pressure gages used in testing shall preferably have dials graduated over their entire range of about double the intended maximum test pressure, but in no case shall the range be less than 1 ½ times that pressure. The spacing between graduations shall be such that the inspector and the operator controlling the test shall be able to determine when the required test pressure has been applied. Digital pressure gages having a wider range of pressure readings may be used provided the readings give the same or greater degree of accuracy as obtained with dial pressure gages.

PG-100 HYDROSTATIC DEFORMATION TEST

Where no rules are given and it is impossible to calculate with a reasonable degree of accuracy the strength of a boiler structure or any part thereof, a full-sized sample shall be built by the Manufacturer and tested in accordance with the Standard Practice for Making a Hydrostatic Test on a Boiler Pressure Part to Determine the Maximum Allowable Working Pressure, given in A-22 or in such other manner as the Committee may prescribe.

CERTIFICATION BY STAMPING AND DATA REPORTS

PG-101 HEATING SURFACE COMPUTATION

PG-101.1 For the stamping required by PG-106, the heating surface shall be computed as specified in PG-101.1.1 through PG-101.1.3.

PG-101.1.1 Heating surface, as part of a circulating system in contact on one side with water or wet steam being heated and on the other side with gas or refractory being cooled, shall be measured on the side receiving heat.

PG-101.1.2 Boiler heating surface and other equivalent surface outside the furnace shall be measured circumferentially plus any extended surface.

PG-101.1.3 Waterwall heating surface and other equivalent surface within the furnace shall be measured as the projected tube area (diameter x length) plus any extended surface on the furnace side. In computing the heating surface for this purpose, only the tubes, fireboxes, shells, tubesheets, and the projected area of headers need to be considered, except that for vertical firetube steam boilers only that portion of the tube surface up to the middle of the gage glass is to be computed.

PG-104 GENERAL

PG-104.1 The completed boiler unit includes all piping and piping components as defined in the Introduction.

The Manufacturer [see Note (1) below] of any complete boiler unit to be stamped with the Code symbol has the responsibility of assuring through proper Code certification that all work performed by him or others responsible to him complies with all requirements of the Code, including design, construction, materials, and workmanship. With the exception of field installed boiler external piping, when some portions of a complete boiler unit are supplied by, or Code work is performed by others not responsible to the Manufacturer, the Manufacturer has the duty of obtaining from these other organizations their proper Code certification, covering such portions of work.

When the Manufacturer furnishes a shop assembled boiler that is complete except for boiler external piping, and the boiler has been hydrostatically tested in the shop and properly stamped with the Manufacturer's "S" symbol, the subsequent installation in the field of the external piping within the scope of Section I is not by itself considered "field assembly of the boiler" [see Note (2) below].

No Manufacturer or assembler may accept Code responsibility for work that falls within the scope of the Code, that is performed by workmen employed by any other organization, except through proper Code certification. The responsibilities set forth herein relate only to Code compliance and are not to be construed as involving contractual relations or legal liabilities.

NOTES:

(1) Boiler Manufacturer or Manufacturer as used in PG-104 or other paragraphs referenced to this Note may also be an Engineering Contractor organization with or without fabricating facilities, but having the capability of providing a design specification that establishes the pressure and temperature conditions for each component of a complete boiler unit and of assembling the fabricated parts in the field with authorization from the Society to use the Code symbol stamp "S" in accordance with the Code provisions in PG-105.3.

(2) When boiler external piping within the scope of Section I is furnished by other than the boiler Manufacturer, the boiler Manufacturer is not responsible for the Code certification of such piping. The organizations that furnish and that install such external piping by welding shall furnish proper Code certification (PG-104.2) for such piping including Manufacturers' Data Report Form P-4A as required by PG-112.2.5 and PG-112.3.

PG-104.2 Proper Code certification refers to the furnishing of stamping and Data Reports as evidence to establish the following.

PG-104.2.1 The organization that performed that portion of the work held an appropriate Certificate of Authorization.

PG-104.2.2 By signing and furnishing the appropriate data report, that organization certified compliance with Code rules for that portion of the work.

PG-104.2.3 By proper use of the Code symbol stamp, that organization identified the portions of the work covered by its Data Report Form.

PG-104.2.4 By countersignature on the same Data Report a qualified Inspector confirmed that portion of the work complied with applicable Code rules.

PG-105 CODE SYMBOL STAMPS

PG-105.1 Authorization. Except as permitted in PG-105.5, no organization may assume responsibility for Code construction without having first received from the ASME a Certificate of Authorization to use one of the Code symbol stamps shown in Figs. PG-105.1 through PG-105.4. There are six such stamps, defined as follows:

(a) S -- power boiler symbol stamp (see Fig. PG-105.1)

(b) M – miniature boiler symbol stamp (see Fig. PG-105.1)

(c) E – electric boiler symbol stamp (see Fig. PG-105.1)

(d) A – boiler assembly symbol stamp (see Fig. PG-105.2)

(e) PP – pressure piping symbol stamp (see Fig. PG-105.3)

(f) V – safety valve symbol stamp (see Fig. PG-105.4)

Stamps for applying the Code symbol shall be obtained from the Society. Each boiler, superheater, waterwall, economizer, or boiler part to which a Code symbol is to be applied shall be fabricated by a Manufacturer who is in possession of an appropriate Code symbol stamp. A Certificate of Authorization to use the Code symbol "S," "M," "E," "A," "PP," or "V" stamp will be granted by the Society pursuant to the provisions of these paragraphs.

FIG. PG-105.4 OFFICIAL SYMBOL FOR STAMP TO DENOTE THE AMERICAN SOCIETY OF MECHANICAL ENGINEERS' STANDARD FOR BOILER PRESSURE RELIEF VALVES

FIG. PG-105.1 OFFICIAL SYMBOLS FOR STAMPS TO DENOTE THE AMERICAN SOCIETY OF MECHANICAL ENGINEERS' STANDARD FOR BOILERS

FIG. PG-105.2 OFFICIAL SYMBOL FOR STAMP TO DENOTE THE AMERICAN SOCIETY OF MECHANICAL ENGINEERS' STANDARD FOR ASSEMBLY

FIG. PG-105.3 OFFICIAL SYMBOL FOR STAMP TO DENOTE THE AMERICAN SOCIETY OF MECHANICAL ENGINEERS' STANDARD FOR WELDED PIPING

PG-109 STAMPING OF PRESSURE PIPING

PG-109.1 Boiler external piping, as defined in the Introduction, may be fabricated by a manufacturer other than the Manufacturer of the boiler, provided that the manufacturer has been issued a Certificate of Authorization to use the "S" or "PP" symbol stamp. Boiler external piping may be installed by welding by a manufacturer or contractor other than the Manufacturer of the boiler, provided such an organization has been issued a Certificate of Authorization to use the "S," "PP," or "A" symbol stamp. When boiler external piping is installed by welding, the welding, including the qualification of welding procedures, welders, and welding operators, shall be done in accordance with the applicable rules of ASME B31.1. The welding shall be inspected by an Authorized Inspector at such stages of the work as he may elect. The organizations which fabricate or install such piping shall furnish proper code certification (PG-104.2) for it including a Manufacturer's Data Report Form P-4A as required by PG-112.2.5 and PG-112.3.

PG-109.2 Welded boiler external piping included within the scope of this Code, over NPS 2 (DN 50), shall be stamped with a Code symbol, together with the manufacturer's or contractor's name and serial number. Such stamping shall be on the pipe, valve or fitting adjacent to the welded joint farthest from the boiler. For piping operating at temperatures above 800° F (425° C) the symbol may be stamped on a nameplate that is irremovably attached by welding, provided such welding is postweld heat treated, or on a circular metal band at least ¼ in. (6 mm) thick. This band around the pipe shall be secured in such a manner as to prevent it from slipping off during handling and installation.

Welded piping NPS 2 (DN 50) or less included within the scope of this Code shall be marked with an identification acceptable to the Inspector and traceable to the required Data Report. Such marking shall be of a type that will remain visible until the piping has been installed.

PG-109.3 A manufacturer in possession of the pressure piping symbol stamp may

(a) design and fabricate welded piping. Such fabrications shall be stamped and reported on a Form P-4A, Manufacturer's Data Report for Fabricated Piping, as called for in PG-112.2.5.

(b) fabricate other parts of boilers, such as superheater, waterwall, or economizer headers, where complete design requirements are provided by others. Such parts shall be stamped or marked as required by PG-106.8 and reported on a Form P-4, Manufacturer's Partial Data Report, as called for in PG-112.2.4.

PG-109.4 Mechanically assembled boiler external piping which contains no pressure boundary welds does not require stamping, and as such may be assembled by a non-stamp holder. Note that the responsibility for documentation and hydrostatic testing of a mechanically assembled boiler external piping must be assumed by a holder of a valid "S," "A," or "PP" stamp (see PG-112.2.5).

PG-110 STAMPING OF BOILER PRESSURE RELIEF VALVES

Each pressure relief valve shall be plainly marked with the required data by the Manufacturer or Assembler (see PG-73.4.4) in such a way that the marking will not be obliterated in service. The marking shall be placed on the valve or on a nameplate securely fastened to the valve. The Code "V" symbol shall be stamped on the valve or nameplate by the Manufacturer or Assembler, as applicable. The other required data may be stamped, etched, impressed, or cast on the valve or nameplate. For units other than those included below, see PG-4. The marking shall include the following:

(a) the name (or an acceptable abbreviation) of the Manufacturer and Assembler, as applicable

(b) Manufacturer's design or type number

(c) NPS (DN) (the nominal pipe size of the valve inlet)

(d) set pressure __ psi (MPa)

(e) *Capacity*

(1) capacity __ lb/hr (kg/hr) (for saturated steam service in accordance with PG-69.2) or

(2) capacity __ lb/hr (kg/hr) at __ °F (°C) (for superheated steam service in accordance with PG-68.7 or supercritical steam service in accordance with PG-69.2.3) or

(3) capacity __ gal/min (l/min) at 70°F (20°C) and lb/hr (kg/hr) steam for economizer service in accordance with PG-69.2

(f) year built, or alternatively, a coding may be marked on the valve such that the valve Manufacturer or

Assembler can identify the year the valve was assembled and tested

(g) ASME symbol as shown in Fig. PG-105.4

(h) The pilot of a pilot-operated pressure relief valve shall be plainly marked by the Manufacturer or Assembler showing the name of the Manufacturer, the Manufacturer's design or type number, the set pressure in pounds per square inch (MPa) , and the year built, or alternatively, a coding that the Manufacturer can use to identify the year built.

PG-111 LOCATION OF STAMPINGS

The location of the required stampings shall be as listed below. These stampings shall be left uncovered or an easily removable marked cover may be provided over the stamping when a boiler is covered with insulation, or jacketed. No piping, boiler appliance, or other obstructions shall interfere with reading of the stamping.

PG-111.1 Horizontal-return tubular boilers – on the front head above the central rows of tubes.

PG-111.2 Horizontal-flue boilers – on the front head above the flues.

PG-111.3 Traction, portable, or stationary boilers of the locomotive type or Star watertube boilers – on the furnace end above the handhole. Or on traction boilers of the locomotive type – on the left wrapper sheet forward of the driving wheel.

PG-111.4 Vertical firetube and vertical submerged tube boilers – on the shell above the firedoor and handhole opening.

PG-111.5 Watertube Boilers

PG-111.5.1 Drum type – on a head of the steam outlet drum near and above the manhole.

PG-111.5.2 Forced-flow steam generator with no fixed steam and waterline – the master stamping (PG-106.3) shall be located on a major pressure part, located near the main operating floor where readily visible. The Data Report Form shall record the location of the master stamping.

PG-111.6 Scotch marine boilers – on either side of the shell near the normal water level line and as near as practical to the front tubesheet.

PG-111.7 Economic boilers – on the front head, above the center row of tubes.

PG-111.8 Miniature and electric boilers – on some conspicuous and accessible place on the boiler proper, or on a stamping plate at least 3/64 in. (1.2 mm) thick, permanently fastened (adhesives prohibited) to the boiler.

PG-111.9 On any of the above types where there is not sufficient space in the place designated, and for other types and new designs – in a conspicuous place on the boiler proper. The Data Report Form shall record the location of the required stamping.

PG-111.10 Superheaters – on superheater header near the outlet. Other headers shall carry identifying marks.

PG-111.11 Economizers – at a handy location on water inlet header or drums. Other headers shall carry identifying marks.

PG-111.12 Waterwalls – on one end of a lower header. Other headers shall carry identifying marks.

PG-111.13 When required by PG-106.6 and PG-106.7, the Manufacturer [see PG-104, Note (1)] shall furnish a nameplate or plates on which the appropriate Code Symbol and design data for the scope of his responsibility are permanently imprinted. The nameplate shall be securely attached to the front of the boiler, its setting or casing, at a place readily visible from the operating floor or platform.

PG-112 MANUFACTURERS' DATA REPORT FORMS

PG-112.1 Ten types of Manufacturers' Data Report Forms are shown in the Appendix under the heading "Data Report Forms and Guides" at the end of this Section. These forms shall be used by the Manufacturer [see PG-104, Note (1)] to record all the items of a complete boiler unit, in accordance with the provisions of PG-112.2. When the certification of the complete boiler unit is accomplished by more than one Data Report, the principal Data Report (P-2, P-2A, P-3, or P-3A) shall be designated as the Master Data Report (see PG-113).

For forced-flow steam generators with no fixed steam and waterline consisting of groups of pressure parts or components designed at several different pressure levels, a separate Manufacturers' Data Report shall clearly identify the pressure parts at each pressure level and show the maximum allowable working pressure. These several Data Reports shall be attached to a Master Data Report (PG-113) that shall clearly identify each component as part of the complete unit.

PG-112.2 Types of Data Report Forms. The types of Data Report Forms and the purposes for which they are to be used are specified in PG-112.2.1 through PG-112.2.8.

PG-112.2.1 Form P-2, Manufacturers' Data Report for All Types of Boilers Except Watertube and Electric, shall be used to record all types of boilers other than watertube boiler units and parts thereof, which are included under Form P-3.

PG-112.2.1.1 Form P-2A, Manufacturers' Data Report for All Types of Electric Boilers, shall be used to record all types of electric boilers.

PG-112.2.1.2 Form P-2B, Manufacturers' Data Report for Electric Superheaters and Reheaters, shall be used to record electric superheaters and reheaters installed external to the boiler setting.

PG-112.2.2 Form P-3, Manufacturers' Data Report for Watertube Boilers, Superheaters (except electric), Waterwalls, and Economizers, shall be used to record all of the items comprising a watertube boiler.

The Form P-3 shall also be used to record a superheater, waterwall, or economizer when the design

of such an item is certified by a manufacturer other than the boiler Manufacturer, or when such an item is to be added to an existing boiler. The item shall be stamped with the ASME "S" symbol and the additional information, as applicable, shown in PG-106.4.2.

Item 10 on Form P-3 shall be used to record other parts connected at the openings listed in Item 11 if such parts are fabricated of materials or by processes that require Code inspection. If such parts have not been connected prior to the hydrostatic test, a notation shall be made under Item 10 reading: "No parts connected to the openings listed in Item 11 except as noted."

PG-112.2.3 Form P-3A, Engineering-Contractor Data Report for a Complete Boiler Unit, shall be used when such an organization assumes the Manufacturer's Code responsibility as provided for by PG-104, Note (1). This form shall be used to certify Code responsibility for the design specification of the complete boiler unit, of which the components are individually certified by their individual manufacturers in accordance with the Code rules. This form also provides for field assembly certification.

PG-112.2.4 Form P-3A shall not be used by a Manufacturer to provide Code certification for only a portion of the complete boiler unit.

PG-112.2.5 Form P-4A, Manufacturers' Data Report for Fabricated Piping, shall be used to record all shop or field-welded piping that falls within the scope of this Section but is not furnished by the boiler Manufacturer. Form P-4B, Manufacturers' Data Report for Field Installed Mechanically Assembled Piping, shall be used to record all field installed mechanically assembled boiler external piping. Form P-4B shall be used only for piping that contains no joints brazed or welded by the field installer.

PART PFT
REQUIREMENTS FOR FIRETUBE BOILERS

GENERAL

PFT-1 GENERAL

The rules in Part PFT are applicable to firetube boilers and parts thereof and shall be used in conjunction with the general requirements in Part PG as well as with the specific requirements in the applicable Parts of this Section that apply to the method of fabrication used.

MATERIALS

PFT-5 GENERAL

PFT-5.1 Materials used in the construction of pressure parts for firetube boilers shall conform to one of the specifications given in Section II and shall be limited to those for which allowable stress values are given in Tables 1A and 1B of Section II, Part D, or as otherwise specifically permitted in Parts PG and PFT.

PFT-5.2 Waterleg and doorframe rings of vertical firetube boilers and of locomotive and other type boilers shall be of wrought iron or steel, or cast steel as designated in the SA-216. The ogee or other flanged construction may be used as a substitute in any case.

DESIGN

PFT-8 GENERAL

The rules in the following paragraphs apply specifically to the design of firetube boilers and parts thereof and shall be used in conjunction with the general requirements for design in Part PG as well as with the specific requirements for design in the applicable Parts of this Section that apply to the method of fabrication used.

PFT-9 THICKNESS REQUIREMENTS

PFT-9.1 Shell and Dome. The thickness after forming shall be as determined in accordance with the rules in Part PG.

PFT-9.2 Tubesheet

PFT-9.2.1 The thickness shall be as determined in accordance with Part PG and Part PFT.

PFT-9.2.2 When buttwelded to the shell of a firetube boiler, a formed tubesheet with a straight flange longer than 1 ½ times the tubesheet thickness shall have a straight flange thickness not less than that specified in the table in PFT-9.2.1, but in no case less than 0.75 times the thickness of the shell to which it is attached.

PFT-10 SHELL JOINTS

Longitudinal and circumferential welded joints of a shell or drum shall comply with the rules in Part PW.

PFT-11 ATTACHMENT OF HEADS AND TUBESHEETS

Flat heads and tubesheets of firetube boilers shall be attached by one of the following methods.

PFT-11.2 By flanging and butt welding in accordance with Parts PG and PW.

PFT-11.3 By attaching an outwardly or inwardly flanged tubesheet to the shell by fillet welding provided the following requirements are met.

PFT-11.3.1 The tubesheet is supported by tubes, or stays, or both.

PFT-11.3.2 The joint attaching an outwardly flanged tubesheet is wholly within the shell and forms no part thereof.

PFT-11.3.3 Inwardly flanged tubesheets are full fillet welded inside and outside.

PFT-11.3.4 The throat dimension of the full fillet weld is equal to not less than 0.7 of the thickness of the head.

PFT-11.3.5 The shell at the welds is not in contact with primary furnace gases.[1]

PFT-11.3.6 The construction conforms in all other respects to the requirements of this Section, including welding and postweld heat treating, except that volumetric examination is not required.

PFT-11.3.7 This construction shall not be used on the rear head of a horizontal-return tubular boiler and

inwardly flanged tubesheets shall not be used on a boiler with an extended shell.

PFT-11.3.8 On inwardly flanged tubesheets, the length of flange shall conform to the requirements of PW-13 and the distance of the outside fillet weld to the point of tangency of the knuckle radius shall be not less than ¼ in. (6 mm).

PFT-11.4 By attaching an unflanged tubesheet to the shell by welding, provided the requirements of PFT-11.4.1 through PFT-11.4.7 are met.

PFT-11.4.1 The tubesheet is supported by tubes, or stays, or both.

PFT-11.4.2 The welded joint may be made through the tubesheet or shell thickness. When the weld joint is made through the shell, a minimum of 80% of the pressure load shall be carried by the tubes, stays, or both.

PFT-11.4.3 The weld is a full penetration weld equal at least to the full thickness of the base metal applied from either or both sides. When the full penetration weld is made through the shell, an external fillet weld with a minimum throat of ¼ in. (6mm) shall be provided, and no weld prep machining shall be performed on the flat tubesheet. The distance from the edge of the completed weld to the peripheral edge of the tubesheet shall not be less than the thickness of the tubesheet.

PFT-11.4.4 The shell or wrapper sheet, where exposed to primary furnace gases[13] and not water cooled, does not extend more than 1/8 in. (3 mm) beyond the outside face of the tubesheet.

PFT-11.4.5 The weld attaching a furnace or a lower tubesheet of a vertical firetube boiler to the furnace sheet is wholly within the furnace sheet and is ground flush with the upper or water side of the tubesheet.

PFT-11.4.6 The construction conforms in all other aspects to the requirements of this Section including welding, and postweld heat treatment, except that volumetric examination is not required.

PFT-11.4.7 This construction shall not be used on the rear head of a horizontal-return tubular boiler.

PFT-12 TUBES

PFT-12.1 Allowable Working Pressure

PFT-12.1.1 The maximum allowable working pressure of tubes or flues of firetube boilers shall be as given in PFT-50 and PFT-51.

PFT-12.1.2 The maximum allowable working pressure for copper tubes or nipples subjected to internal or external pressure shall not exceed 250 psi (1.7 MPa). The maximum temperature shall not exceed 406°F (208°C).

[13] Primary furnace gases are those in a zone where the design temperature of those gases exceeds 850°F (455°C).

FIG. PFT-12.1 SOME ACCEPTABLE FORMS OF TUBE ATTACHMENT ON FIRETUBE BOILERS

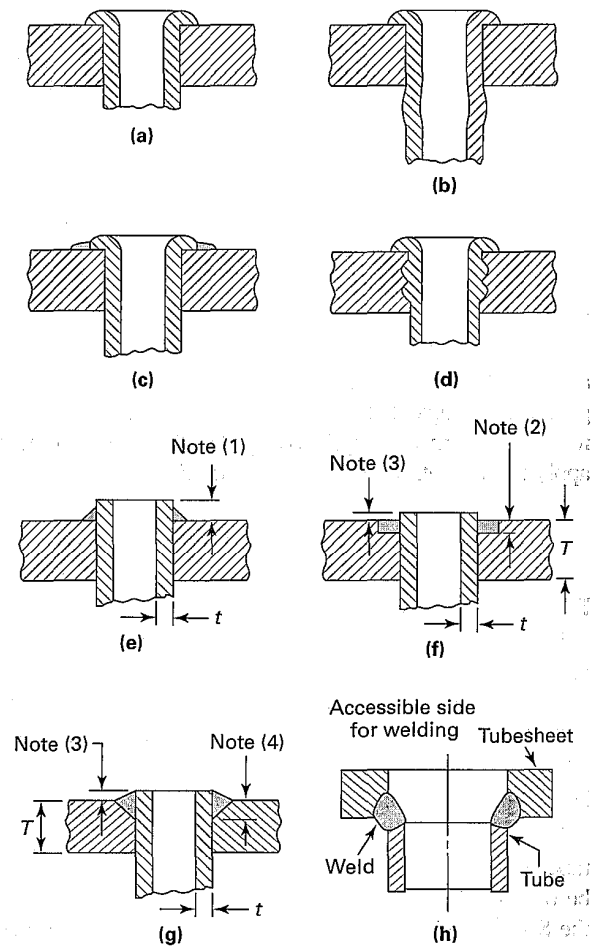

NOTES:

(1) Not less than t or ⅛ in. (3 mm), whichever is the greater, nor more than $2t$ or ¼ in. (6 mm), whichever is the lesser.

(2) Not less than t or ⅛ in. (3 mm), whichever is the greater, nor more than $T/3$ (see PFT-12.2.1.2).

(3) Not more than t.

(4) Not less than t or ⅛ in. (3 mm), whichever is the greater, nor more than $T/3$ (see PFT-12.2.1.2).

The maximum allowable working pressure for copper clad tubes subjected to external pressure shall be determined by the formula in PFT-51, in which t may be increased by one-half the thickness of the cladding.

PFT-12.2 Attachment of Tubes

PFT-12.2.1 Figure PFT-12.1 illustrates some of the acceptable types of tube attachments. Such connections shall be

(a) expanded and beaded as in illustrations (a), (b), and (d)

(b) expanded and beaded and seal welded as in illustration (c)

(c) expanded and seal welded as in illustration (e)

(d) welded, as in illustrations (f) and (g)

Tube ends attached by expanding and welding are subject to the provisions specified in PFT-12.2.1.1 through PFT-12.2.1.3.

PFT-12.2.1.1 Where no bevel or recess is employed, the tube shall extend beyond the tubesheet not less than a distance equal to the tube thickness or 1/8 in. (3 mm), whichever is the greater, nor more than twice the tube thickness or ¼ in. (6 mm), whichever is the lesser [see Fig. PFT-12.1, illustration (e)].

PFT-12.2.1.2 The tubesheet hole may be beveled or recessed. The depth of any bevel or recess shall not be less than the tube thickness or 1/8 in. (3 mm), whichever is greater, nor more than one-third of the tubesheet thickness, except that when tube thicknesses are equal to or greater than 0.150 in. (4 mm), the bevel or recess may exceed *T*/3. Where the hole is beveled or recessed, the projection of the tube beyond the tubesheet shall not exceed a distance equal to the tube wall thickness [see Fig. PFT-12.1, illustrations (f) and (g)].

PFT-12.2.1.3 On types of welded attachment shown in Fig. PFT-12.1, illustrations (c) and (e), the tubes shall be expanded before and after welding. On types shown in illustrations (f) and (g), the tubes may be expanded.

PFT-12.2.2 Expanding of tubes by the Prosser method may be employed in combination with any beaded or seal welded attachment method [see Fig. PFT-12.1, illustration (b)].

PFT-12.2.3 After seal welding as shown by Fig. PFT-12.1, illustrations (c) and (e), a single hydrostatic test of the boiler shall suffice.

PFT-12.2.4 The inner surface of the tube hole in any form of attachment may be grooved or chamfered.

PFT-12.2.5 The sharp edges of tube holes shall be taken off on both sides of the plate with a file or other tool.

DOORS AND OPENINGS

PFT-40 WELDED DOOR OPENINGS

Arc or gas welding may be used in the fabrication of door holes provided the sheets are stayed around the opening in accordance with the requirements of PFT-27.6 and PFT-27.7.

No calculations need be made to determine the availability of compensation for door openings spanning between the plates of waterlegs. The required thickness of circular access openings shall be determined in accordance with PFT-51. The required thickness of door openings of other than circular shape shall be calculated using eq. (1) of PG-46, using 2.1 or 2.2 for the value of *C*, depending on the plate thickness, and a value of *p* equal to the waterleg inside width. Volumetric examination of the joining welds is not required.

PFT-41 OPENINGS IN WRAPPER SHEETS

Openings located in the curved portion of the wrapper sheet of a locomotive type boiler shall be designed in accordance with the rules in PG-32.

PFT-42 FIRESIDE ACCESS OPENINGS

The minimum size of an access or fire door opening, in which the minimum furnace dimension is 24 in. (600 mm), shall be not less than 12 in. x 16 in. (300 mm x 400 mm) or equivalent area, 11 in. (280 mm) to be the least dimension in any case. A circular opening shall be not less than 15 in. (380 mm) in diameter.

For furnace dimensions less than 24 in. (600 mm), the opening should be 2 ¾ in. x 3 ½ in. (70 mm x 89 mm) or larger where possible. In cases where the size or shape of the boiler prohibits an opening of that size, two openings with a minimum size of 1 in. (25 mm) may be used, preferably opposite each other, to permit inspection and cleaning of the furnace. If the burner is removable so as to permit inspection and cleaning through the burner opening, a separate access opening need not be provided.

The bonnet or smoke hood of a vertical flue or tubular boiler shall be provided with an access opening at least 6 in. x 8 in. (150 mm x 200 mm) for the purpose of inspection and cleaning the top head of the boiler.

PFT-43 REQUIREMENTS FOR INSPECTION OPENINGS

All firetube boilers shall have sufficient inspection openings, handholes, or washout plugs with a minimum of four openings to permit inspection of the waterside of the tubesheets, furnaces, and tubes and to permit flushing of loose scale and sediment from the boiler. Except where space restrictions would prohibit entry to the boiler, a manhole shall be provided in the upper portion of the shell. All openings shall meet the requirements ofPG-32 through PG-44. Where washout plugs are used, the minimum size shall be NPS 1½ (DN 40), except for boilers 16 in. (400 mm) or less in inside diameter, the minimum size shall be NPS 1 (DN 25).

PFT-44 OPENING BETWEEN BOILER AND SAFETY VALVE

The opening or connection between the boiler and the safety valve shall have at least the area of the valve inlet.

After the boiler Manufacturer provides for the opening required by the Code, a bushing may be inserted in the opening in the shell to suit a pressure relief valve that will have the capacity to relieve all the steam that can be generated in the boiler and which will meet the Code requirements. The minimum size of the connection and opening for the pressure relief valve shall be not less than NPS ½ (DN 15).

No valve of any description shall be placed between the required pressure relief valve or valves and the boiler, or on the discharge pipe between the pressure relief valve and the atmosphere. When a discharge pipe is used, the cross-sectional area shall be not less than the full area of the valve outlet or of the total of the areas of the valve outlets discharging thereinto and shall be as short and straight as possible and so arranged as to avoid undue stresses on the valve or valves.

DOMES

PFT-45 REQUIREMENTS FOR DOMES

PFT-45.1 The longitudinal joint of a dome may be butt welded or the dome may be made without a seam of one piece of steel pressed into shape. The dome flange may be double full fillet lap-welded to the shell if all welding complies fully with the requirements for welding in Part PW. Volumetric examination of the fillet welds may be omitted. The opening shall be reinforced in accordance with PG-32 through PG-44.

PFT-45.3 When a dome is located on the barrel of a locomotive-type boiler or on the shell of a horizontal-return tubular boiler, the outside diameter of the dome shall not exceed six-tenths the inside diameter of the shell or barrel of the boiler unless the portion of the barrel or shell under the dome (the neutral sheet) is stayed to the head or shell of the dome by stays which conform in spacing and size to the requirements given in PG-46 and Table 1A of Section II, Part D. With such stayed construction the outside diameter of a dome located on the barrel or shell of a boiler is limited to eight-tenths of the barrel or shell inside diameter.

PFT-45.4 All domes shall be so arranged that any water can drain back into the boiler.

PFT-45.5 Flanges of domes shall be formed with a corner radius, measured on the inside, of at least twice the thickness of the plate for plates 1 in. (25 mm) in thickness or less, and at least three times the thickness of the plate for plates over 1 in. (25 mm) in thickness.

PFT-45.6 Domes and manhole frames attached to shells or heads of boilers shall be designed in accordance with PG-32 through PG-44.

PART PEB
REQUIREMENTS FOR ELECTRIC BOILERS

GENERAL

PEB-1 GENERAL

The rules in Part PEB are applicable to electric boilers and parts thereof and shall be used in conjunction with the general requirements in Part PG as well as with the special requirements in the applicable Parts of this Section that apply to the method of fabrication used.

PEB-2 SCOPE

PEB-2.1 This part contains special rules for construction of electric boilers, both of the electrode and immersion resistance element type. This Part does not include electric boilers where the heat is applied externally to the boiler pressure vessel by electric resistance heating elements, induction coils, or other electrical means. These types of electric boilers shall be constructed in accordance with other applicable Parts of this Section.

PEB-2.2 Electric boilers and parts thereof that do not exceed the diameter, volume, or pressure limits of PMB-2 may be constructed using the applicable paragraphs of Part PMB in conjunction with this Part.

PEB-2.3 An electrode type boiler is defined as an electric boiler in which heat is generated by the passage of an electric current using water as the conductor.

PEB-2.4 An immersion resistance element type boiler is defined as an electric boiler in which heat is generated by the passage of an electric current through a resistance heating element directly immersed in water, or enclosed in a pipe immersed in water.

PEB-2.5 Electric boilers may be field assembled provided the boiler is manufactured and assembled in compliance with the provisions and requirements of Part PEB and other applicable Parts of this Section.

PEB-3 OPTIONAL REQUIREMENTS FOR THE BOILER PRESSURE VESSEL

The boiler pressure vessel may be constructed in compliance with the ASME Pressure Vessel Code Section VIII, Division 1, rules for unfired steam boilers [UW-2(c)] subject to the conditions specified in PEB-3.1 through PEB-3.4.

PEB-3.1 The Manufacturer who certifies and stamps the completed boiler shall specify to the "U" stamp holder all additional requirements of Part PEB, which are not requirements of Section VIII, Division 1, and shall ensure that these requirements are satisfied.

PEB-3.2 These additional requirements are:

PEB-3.2.1 The materials of construction shall comply with the requirements of PEB-5.1 and PEB-5.3.

PEB-3.2.2 Inspection openings shall comply with the requirements of PEB-10.

PEB-3.3 The boiler pressure vessel shall be stamped with the ASME Code "U" symbol and the letters "UB," and be documented with the ASME U-1 or U-1A Data Report.

PEB-3.4 The master Data Report P-2A for the Electric Boiler shall indicate "Boiler pressure vessel constructed to Section VIII, Division 1 as permitted by Part PEB."

MATERIALS

PEB-5 GENERAL

PEB-5.1 Unless specifically permitted elsewhere in this section, materials used in the construction of pressure parts for electric boilers shall conform to one of the specifications in Section II and shall be limited to those permitted by PG-6, PG-7, PG-8, and PG-9 for which allowable stress values are given in Tables 1A and 1B of Section II, Part D. Miscellaneous pressure parts shall conform to the requirements of PG-11.

PEB-5.2 Seamless or welded shells, plates, or heads of electric boilers shall not be less than 3/16 in. (5 mm) in thickness.

PEB-5.3 Electric boilers of the immersion element type may be fabricated of austenitic stainless steel type 304, 304L, 316, 316L, and 347 of any material specification listed in PG-6 and PG-9, provided that a precautionary statement indicating that the boiler shall be operated using only deionized water, having a maximum conductance of 1 microSiemen per cm (1 μS/cm) [minimum specific resistivity of 1 megohm per cm (1 MΩ/cm)], is clearly marked on the boiler in a visible location.

DESIGN

PEB-8 GENERAL

PEB-8.1 The rules in the following paragraphs apply specifically to the design of electric boilers and parts thereof. They shall be used in conjunction with the general requirements for design in Part PG, any applicable requirements in Part PMB for miniature boilers, and with the specific requirements for design in applicable Parts of this Section that apply to the method of fabrication used.

PEB-8.2 Responsibility of design of electric boilers to be marked with the "E" symbol shall be that of the holder of the "E" stamp.

PEB-9 WELDING

Electric boilers may be constructed by fusion welding in accordance with all the requirements of this Section except that postweld heat treatment, volumetric examination of the welded joints, and the nondestructive examinations described in PG-93.1 are not required when the limitations in PMB-2.1 are not exceeded.

PEB-10 INSPECTION OPENINGS

PEB-10.1 Electric boilers of a design employing a removable cover, or removable internal electric heating elements that will permit access for inspection, and cleaning and having an internal volume (exclusive of casing and insulation) of not more than 5 ft^3 (0.14 m^3) need not be fitted with washout or inspection openings.

PEB-10.2 Electric boilers of more than 5 ft^3 (0.14 m^3) not provided with a manhole, shall have an inspection opening or handhole located in the lower portion of the shell or head. The inspection opening shall not be smaller than NPS 3 (DN 80). In addition, electric boilers of the resistance heating element type designed for steam service shall have an inspection opening or handhole at or near the normal waterline.

PEB-11 FEEDWATER SUPPLY

PEB-11.1 The feedwater source to electric boilers shall be capable of meeting the applicable requirements of PG-61. Feedwater connections to an electric boiler shall not be smaller than NPS ½ (DN 15), except as permitted by PMB-11.

PEB-11.2 Electric boilers that do not exceed the diameter, volume, or pressure limits of PMB-2, may have the feedwater delivered through the blowoff opening if desired.

PEB-12 BLOWOFF

PEB-12.1 The blowoff piping for each electric boiler pressure vessel having a normal water content not exceeding 100 gal (380 L) is required to extend through only one valve.

PEB-12.2 The minimum size of blowoff pipes and fittings shall be NPS 1 (DN 25), except that for boilers of 200 kW input or less the minimum size of pipe and fittings may be NPS ¾ (DN 20). Electric boilers that do not exceed the diameter, volume, or pressure limits of PMB-2 may have blowoff connections in accordance with PMB-12.

PEB-13 WATER LEVEL INDICATORS

PEB-13.1 Electric boilers of the electrode type shall have at least one gage glass. The gage glass shall be located as to indicate the water levels both at startup and under maximum steam load conditions as established by the Manufacturer.

PEB-13.2 Electric boilers of the resistance element type shall have at least one gage glass. The lowest visible water level in the gage glass shall be at least 1 in. (25 mm) above the lowest permissible water level as determined by the Manufacturer. Each electric boiler of this type shall also be equipped with an automatic low-water cutoff on each boiler pressure vessel so located as to automatically cut off the power supply to the heating elements before the surface of the water falls below the visible level in the gage glass.

PEB-13.3 Tubular gage glasses on electric boilers shall be equipped with protective rods or shields.

PEB-14 PRESSURE GAGES

Pressure gages shall meet the requirements of PG-60.6.

PEB-15 PRESSURE RELIEF VALVES

PEB-15.1 Each electric boiler shall have at least one pressure relief valve. Electric boilers with a power input more than 1,100 kW shall have two or more pressure relief valves.

PEB-15.2 The minimum pressure relief valve relieving capacity for electric boilers shall be 3 ½ lb/hr/kW (1.6 kg/hr/kW) input. The pressure setting shall not be higher than the MAWP stamped on the completed boiler (see PEB-18.3.2).

PEB-15.3 Pressure relief valves shall be mounted in accordance with PG-71.2 with the spindle vertical. Electric boilers that do not exceed the diameter, volume, or pressure limits of PMB-2, may have a pressure relief valve(s) installed in other than the vertical position, provided that

(a) the valve design is satisfactory for such position

(b) the valve is not larger than NPS ¾ (DN 20)

(c) the maximum angle of deviation from vertical does not exceed 30 deg

(d) the nozzle location is such that no material that could interfere with the operation of the valve can accumulate at the valve inlet

(e) the discharge opening of the valve body and discharge piping is oriented so that drainage is adequate

PEB-16 AUTOMATIC DEVICES

Electric boilers shall be provided with pressure and/or temperature controls and an automatic low-water fuel cutoff. No low-water cutoff is required for electrode type boilers.

PEB-17 HYDROSTATIC TEST

PEB-17.1 Each electric boiler pressure vessel shall be hydrostatically tested at completion of fabrication in accordance with PG-99 or PMB-21, as applicable.

PEB-17.2 In addition to the above, after assembly of the boiler pressure vessel and the mechanically assembled boiler external piping and trim, the completed electric boiler shall be given a final hydrostatic test at a

pressure not less than 1 ½ times the MAWP of the pressure vessel. Miniature electric boilers that are trimmed to operate at less than the MAWP of the pressure vessel shall be given a hydrostatic test at a pressure not less than the safety valve setting.

PEB-17.3 When the electric boiler is to be marked with the "E" symbol, the symbol shall be applied after completion of the hydrostatic test of PEB-17.2.

PEB-18 INSPECTION AND STAMPING OF BOILERS

PEB-18.1 Inspection of electric boilers shall be as required by PG-90.1 and PG-90.3. Witness by the Authorized Inspector of the hydrotest required in PEB-17.2 for the completed boiler may be omitted for electric boilers that meet all the following limitations:

(a) 800 kW maximum per vessel

(b) 600 V maximum

(c) mechanically assembled boiler external piping (BEP) only

When the Authorized Inspector does not perform a final inspection of the completed boiler, the Manufacturer or Assembler shall make an equivalent examination. The equivalent examination shall be in accordance with a quality control procedure meeting the requirements of PEB-18.2 and PEB-18.5.

PEB-18.1.1 Electric boilers exceeding the size limitations specified in PEB-18.1, and having only mechanically assembled external piping (BEP) and trim, shall have a final inspection by the Authorized Inspector, who shall also witness the hydrostatic test called for in PEB-17.2.

PEB-18.1.2 For electric boilers having welded or brazed boiler external piping (BEP) or trim, the inspection requirements of PG-90.1 and the hydrostatic test requirements of PG-99 apply.

PEB-18.2 Each electric boiler Manufacturer shall comply with the applicable requirements of PG-104 and PG-105.

PEB-18.2.1 An electric boiler Manufacturer or Assembler applying for or renewing the "E" stamp shall have its facilities and organizations subject to a joint review by its Authorized Inspection Agency and the legal jurisdiction involved (see last paragraph of PG-105.4).

PEB-18.2.2 A Manufacturer or Assembler holding an "E" stamp and assembling units where the final shop inspection is not mandatory (see PEB-18.1), shall be subject to periodic review by its Authorized Inspection Agency. The review shall be conducted on a quarterly basis or more frequently if deemed necessary by the Authorized Inspection Agency. The frequency of this review may be reduced subject to written agreement between the Manufacturer or Assembler and its inspection agency and the written approval of the appropriate legal jurisdiction. However, in no case shall the review be less than once every 6 months.

PEB-18.3 The stamping of electric boilers shall conform to the requirements of PG-106. Completed electric boilers shall be marked with the "S" or "M" symbol by the Manufacturer of the boiler pressure vessel except when the boiler pressure vessel is constructed under the provisions of PEB-3 (see PEB-18.4). When the trim, fixtures and fittings (such as valves), threaded boiler external piping, and appurtenances are connected to an electric boiler by a Manufacturer or Assembler not authorized to apply the "S" or "M" stamp, the boiler assembler shall apply an "E" stamp to the completed assembly. "E" stamp holders are limited to the use of assembly methods that do not require welding or brazing.

PEB-18.3.1 The stamping of the boiler pressure vessel shall be located as called for in PG-111.8 and need not indicate the kW input or the maximum designed steaming capacity.

PEB-18.3.2 The stamping of the complete electric boiler shall be on a separate metallic plate and shall be in accordance with PG-106.4. The MAWP shall be that established by the completed boiler assembler holding the "S," "M," or "E" stamp, but in no case higher than the MAWP stamped on the boiler shell. The MAWP shall be listed on Part II of Form P-2A, Manufacturers' Data Report for All Types of Electric Boilers. This plate shall be located on the assembly so that it is readily visible from the operating floor.

PEB-18.3.3 The stamping required by PEB-18.3.2 need not be done in the presence of the Authorized Inspector for electric boilers that do not receive final inspection by the Authorized Inspector (see PEB-18.1).

PEB-18.4 For boiler pressure vessels constructed under the provisions of PEB-3, the inspection and stamping requirements of Section VIII, Division 1, UG-116(c) for special service pressure vessels (UB), shall be followed.

PEB-18.5 Those Manufacturers and Assemblers providing an equivalent examination of completed electric boilers when final inspection is not witnessed by the Authorized Inspector (see PEB-18.1), shall provide oversight by a Certified Individual (CI).

PEB-18.5.1 A Certified Individual (CI) shall be an employee of the Manufacturer or Assembler and shall be qualified and certified by the Manufacturer or Assembler. Qualifications shall include as a minimum

(a) knowledge of the requirements of this Section for the application of Code symbols

(b) knowledge of the Manufacturer's quality program

(c) training commensurate with the scope, complexity, or special nature of the activities to which oversight is to be provided

The Manufacturer or Assembler shall maintain a record containing objective evidence of the Certified Individual's qualifications, training and certification.

PEB-18.5.2 The duties of a Certified Individual (CI) shall be to assure that each use of the Code symbol as permitted in PEB-18.3.3 is in accordance with the requirements of this Section and is documented on the Certificate of Conformance on Form P-2A,

Manufacturers' Data Report for All Types of Electric Boilers. The CI shall also

(a) verify that each electric boiler, to which a Code symbol is applied, meets all applicable requirements of this Section

(b) sign the Certificate of Conformance, Form P-2A, prior to release of control of the boiler

PEB-19 MANUFACTURERS' DATA REPORT FOR ELECTRIC BOILERS

PEB-19.1 This form consists of two parts. Part I is to be completed by the Manufacturer of the boiler pressure vessel who is the holder of the "S" or "M" stamp and his inspection agency. Part II is to be completed by the Manufacturer or Assembler responsible for the completed electric boiler who shall be authorized to use any of the "S," "M," or "E" stamps.

PEB-19.2 When the boiler pressure vessel is constructed by a "U" stamp holder and certified on a U-1 or U-1A Data Report, Part 1 shall be completed by the "S," "M," or "E" stamp holder to the extent indicated in Guide A-351.1.

EXCERPTS FROM: ASME BOILER AND PRESSURE VESSEL CODE
SECTION IV - HEATING BOILERS
2010 EDITION

INTRODUCTION

The rules of this Section of the Code cover minimum construction requirements for the design, fabrication, installation, and inspection of steam heating, hot water heating, hot water supply boilers that are directly fired with oil, gas, electricity, coal, or other solid or liquid fuels, and for operation at or below the pressure and temperature limits set forth in this document. Similar rules for potable water heaters are also included.

For Section IV application, the boiler proper or other vessels terminate at the supply and return connections to the system or the supply and feedwater connections of a hot water supply boiler. These connections may be any of the following:

(a) the first circumferential joint for welding end connections

(b) the face of the first flange in bolted flanged connections

(c) the first threaded joint in that type of connection

Included within the scope of the boiler are pressure-retaining covers for inspection openings, such as manhole covers, handhold covers, and plugs; and headers required to connect individual coils, tubes, or cast sections within a boiler.

The rules are divided into four major Parts: Part HG, applying to all materials of construction except as provided for in Part HLW; Part HF, applying to assemblies fabricated of wrought material, except as provided for in Part HLW; Part HC, applying to cast iron assemblies; Part HA, applying to boilers constructed of cast aluminum; and Part HLW, applying to potable water heaters. Part HF is further subdivided into Subpart HW, containing rules for welded construction, and Subpart HB, containing rules for brazed construction.

The Parts and Subparts of this Section are divided into Articles. Each Article is given a number and a title, as for example, Part HG, Article 3, Design. Articles are divided into paragraphs that are given a three-digit number, the first of which corresponds to the Article number. Thus, under Article 3 of Part HG, paragraph HG-307 will be found. Paragraphs are further subdivided into subparagraphs. Major subdivisions of paragraphs are designated by three- or four-digit numbers followed by a decimal point and a digit or digits. Where necessary, further subdivisions are represented by letters and then by numbers in parentheses. Minor subdivisions of the paragraphs are also represented by letters. A reference to one of these paragraphs in the text of the Section includes all of the applicable rules in that paragraph. Thus, reference to HG-307 includes all the rules in HG-307.1 through HG-307.4.

This Section does not contain rules to cover all possible details of design and construction. Where complete details are not given, it is intended that the manufacturer, subject to the acceptance of the Authorized Inspector, shall provide details of design and construction that will be as safe as otherwise required by these rules.

When the strength of any part cannot be computed with a satisfactory assurance of safety, these rules provide procedures for establishing its maximum allowable working pressure.

ARTICLE 1
SCOPE AND SERVICE RESTRICTIONS

HG-100 SCOPE

(a) The rules of Part HG apply to steam heating boilers, hot water heating boilers, hot water supply boilers, and to appurtenances thereto.

They shall be used in conjunction with the specific requirements in Part HF, Boilers of Wrought Materials, Part HC, Cast Iron Boilers, and Part HA, Cast Aluminum Boilers, whichever is applicable. The foreword provides the basis for these rules. Part HG is not intended to apply to potable water heaters except as provided for in Part HLW.

(b) This Part contains mandatory requirements, specific prohibitions, and nonmandatory guidance for materials, designs, fabrication, examination, inspection, testing, certification, and pressure relief.

(c) Laws or regulations issued by a municipality, state, provincial, federal, or other enforcement or regulatory body having jurisdiction at the location of an installation, establish the mandatory applicability of these rules, in whole or in part.

HG-101 SERVICE RESTRICTIONS

HG-101.1 Service Restrictions. The rules of this Section are restricted to the following services:

(a) steam boilers for operation at pressures not exceeding 15 psi (100 kPa)

(b) hot water heating boilers and hot water supply boilers for operating at pressures not exceeding 160 psi (1 100 kPa) and/or temperatures not exceeding 250°F (120°C), at or near the boiler outlet, except that when some of the wrought materials permitted by Part HF are used, a lower temperature is specified

HG-101.2 Services in Excess of Those Covered by This Section. For services exceeding the limits specified in HG-101.l, the rules of Section I shall apply.

HG-102 UNITS

Either U.S. Customary, SI, or any local customary units may be used to demonstrate compliance with all requirements of this edition (e.g., materials, design, fabrication, examination, inspection, testing, certification, and overpressure protection).

In general, it is expected that a single system of units shall be used for all aspects of design except where unfeasible or impractical. When components are manufactured at different locations where local customary units are different than those used for the general design, the local units may be used for the design and documentation of that component. Similarly, for proprietary components or those uniquely associated with a system of units different than that used for the general design, the alternate units may be used for the design and documentation of that component.

For any single equation, all variables shall be expressed in a single system of units. When separate equations are provided for U.S. Customary and SI units, those equations must be executed using variables in the units associated with the specific equation. Data expressed in other units shall be converted to U.S. Customary or SI units for use in these equations. The result obtained from execution of these equations may be converted to other units.

Production, measurement and test equipment, drawings, welding procedure specifications, welding procedure and performance qualifications, and other fabrication documents may be in U.S. Customary, SI, or local customary units in accordance with the fabricator's practice. When values shown in calculations and analysis, fabrication documents, or measurement and test equipment are in different units, any conversions necessary for verification of Code compliance and to ensure that dimensional consistency is maintained shall be in accordance with the following:

(a) Conversion factors shall be accurate to at least four significant figures.

(b) The results of conversions of units shall be expressed to a minimum of three significant figures.

Conversion of units, using the precision specified above shall be performed to assure that dimensional consistency is maintained.

Conversion factors between U.S. Customary and SI units may be found in the Nonmandatory Appendix M, Guidance for the Use of U.S. Customary and SI Units in the ASME Boiler and Pressure Vessel Code. Whenever local customary units are used the Manufacturer shall provide the source of the conversion factors, which shall be subject to verification and acceptance by the Authorized Inspector.

Material that has been manufactured and certified to either the U.S. Customary or SI material specification (e.g., SA-516M) may be used regardless of the unit system used in design. Standard fittings (e.g., flanges, elbows, etc.) that have been certified to either U.S. Customary units or SI units may be used regardless of the unit system used in design.

All entries on a Manufacturer's Data Report and data for Code required nameplate marking shall be in units consistent with the fabrication drawings for the component using U.S. Customary, SI, or local customary units. It is acceptable to show alternate units parenthetically. Users of this Code are cautioned that the receiving Jurisdiction should be contacted to ensure the units are acceptable.

ARTICLE 2
MATERIAL REQUIREMENTS

HG-200 GENERAL MATERIAL REQUIREMENTS

HG-200.1 Materials Subject to Pressure Stress. Material subject to stress due to pressure shall conform to one of the specifications given in Section II and shall be limited to those that are permitted in HF-200 for boilers of wrought materials and HC-200 for cast iron boilers.

HG-200.2 Internal Parts Subject to Deterioration. Materials shall not be used for internal parts that are liable to fail due to deterioration when subjected to saturated steam temperatures at or below the maximum allowable working pressure.

HG-200.3 Materials Not Found in Section II. Material not covered by specifications in Section II shall not be used unless authorization to use the material is granted by the Boiler and Pressure Vessel Committee on the basis of data submitted to the Committee in accordance with Appendix A.

HG-200.4 Materials Use Not Limited by Specification Title. The title or scope paragraph of a material specification in Section II with respect to product form or service shall not limit the use of a material, provided the material is suitable for the application and its use is permitted by the rules of this Section.

HG-200.5 Materials Use Not Limited by Method of Production. Materials covered by specifications in Section II are not restricted as to the method of production unless so stated in the Specification, and as long as the product complies with the requirements of the Specification.

HG-200.6 Materials With Thicknesses Exceeding Specification Limits. Materials having thicknesses outside of the limits given in the title or scope clause of a specification in Section II may be used in construction, provided they comply with the other requirements of the Specification and with all thickness requirements of this Code.

HG-200.7 Nonpressure Part Materials. Material for nonpressure parts, such as skirts, supports, baffles, lugs, clips, and extended heat-transfer surfaces, need not conform to the specifications for the material to which they are attached or to a material specification permitted in HF-200 or HC-200; but, if welded, they shall be of weldable quality. The allowable stress value shall not exceed 80% of the maximum allowable stress permitted for similar material in Tables HF-300.1 and HF-300.2. Satisfactory performance of a specimen in such service shall not make the material acceptable for use in pressure parts of a vessel.

HG-201 SPECIFIC MATERIAL REQUIREMENTS

Specific material requirements for assemblies constructed of wrought materials are given in Part HF, Article 2 and for assemblies constructed of cast iron in Part HC,

Article 2.

ARTICLE 4
PRESSURE RELIEVING DEVICES

HG-400 PRESSURE RELIEVING VALVE REQUIREMENTS

TABLE HG-400.1
MINIMUM POUNDS OF STEAM PER HOUR (kg/hr)
PER SQUARE FOOT (METER) OF HEATING SURFACE

Boiler Heating Surface	Firetube Boilers	Watertube Boilers
Hand fired	5 (24)	6 (29)
Stoker fired	7 (34)	8 (39)
Oil, gas, or pulverized fuel fired	8 (39)	10 (49)
Waterwall heating surface:		
Hand fired	8 (39)	8 (39)
Stoker fired	10 (49)	12 (59)
Oil, gas, or pulverized fuel fired	14 (68)	16 (78)

GENERAL NOTES:

(a) When a boiler is fired only by a gas having a heat value not in excess of 200 Btu/ft^3 (7 400 kJ/m^3), the minimum safety valves or safety relief valve relieving capacity may be based on the values given for hand fired boilers above.

(b) The minimum safety valve or safety relief valve relieving capacity for electric boilers shall be 3½ lb/hr/kW (1.6 kg/hr/kW) input.

(c) For heating surface determination, see HG-403.

(d) For extended heating surface, the minimum lb/hr/sq ft may be determined by the Manufacturer [see HG-403 (d)].

HG-400.1 Safety Valve Requirements for Steam Boilers

(a) Each steam boiler shall have one or more officially rated safety valves that are identified with the V or HV Symbol of the spring pop type adjusted and sealed to

discharge at a pressure not to exceed 15 psi (100 kPa).

(b) No safety valve for a steam boiler shall be smaller than NPS ½ (DN 15) or larger than NPS 4 (DN 100). The inlet opening shall have an inside diameter equal to, or greater than, the seat diameter.

(c) The minimum relieving capacity of valve or valves shall be governed by the capacity marking on the boiler called for in HG-530.

(d) The minimum valve capacity in pounds per hour shall be the greater of that determined by dividing the maximum Btu output at the boiler nozzle obtained by the firing of any fuel for which the unit is installed by 1,000, or shall be determined on the basis of the pounds (kg) of steam generated per hour per square foot (m^2) of boiler heating surface as given in Table HG-400.1. For cast iron boilers constructed to the requirements of Part HC, the minimum valve capacity shall be determined by the maximum output method. In many cases a greater relieving capacity of valves will have to be provided than the minimum specified by these rules. In every case, the requirement

of HG-400.l(e) shall be met.

(e) The safety valve capacity for each steam boiler shall be such that with the fuel burning equipment installed, and operated at maximum capacity, the pressure cannot rise more than 5 psi (35 Kpa) above the maximum allowable working pressure.

(f) When operating conditions are changed, or additional boiler heating surface is installed, the valve capacity shall be increased, if necessary, to meet the new conditions and be in accordance with HG-400.l (e). The additional valves required, on account of changed conditions, may be installed on the outlet piping provided there is no intervening valve.

HG-400.2 Safety Relief Valve Requirements for Hot Water Boilers

(a) Each hot water heating or supply boiler shall have at least one officially rated safety relief valve, of the automatic reseating type, identified with the V or HV Symbol, and set to relieve at or below the maximum allowable working pressure of the boiler.

(b) Hot water heating or supply boilers limited to a water temperature not in excess of 210°F (99°C) may have, in lieu of the valve(s) specified in (a) above, one or more officially rated temperature and pressure safety relief valves of the automatic reseating type identified with the HV symbol, and set to relieve at or below the maximum allowable working pressure of the boiler.

(c) When more than one safety relief valve is used on either hot water heating or hot water supply boilers, the additional valves shall be officially rated and may have a set pressure within a range not to exceed 6 psi (40 kPa) above the maximum allowable working pressure of the boiler up to and including 60 psi (400 kPa), and 5% for those having a maximum allowable working pressure exceeding 60 psi (400 kPa).

(d) No safety relief valve shall be smaller than NPS ¾ (DN 20) nor larger than NPS 4 (DN 100) except that boilers having a heat input not greater than 15,000 Btu/hr (4.4 kW) may be equipped with a rated safety relief valve of NPS ½ (DN 15).

(e) The required steam relieving capacity, in pounds per hour (kg/h), of the pressure relieving device or devices on a boiler shall be the greater of that determined by dividing the maximum output in Btu at the boiler nozzle obtained by the firing of any fuel for which the unit is installed by 1,000, or shall be determined on the basis of pounds (kg) of steam generated per hour per square foot (m^2) of boiler heating surface as given in Table HG-400.1. For cast iron boilers constructed to the requirements of Part HC, the minimum valve capacity shall be determined by the maximum output method. In many cases a greater relieving capacity of valves will have to be provided than the minimum specified by these rules. In every case, the requirements of HG-400.2 (g) shall be met.

(f) When operating conditions are changed, or additional boiler heating surface is installed, the valve capacity shall be increased, if necessary, to meet the new conditions and shall be in accordance with HG-400,2(g). The additional valves required, on account of changed conditions, may be installed on the outlet piping provided there is no intervening valve.

(g) Safety relief valve capacity for each boiler with a single safety relief valve shall be such that, with the fuel burning equipment installed and operated at maximum capacity, the pressure cannot rise more than 10% above the maximum allowable working pressure. When more than one safety relief valve is used, the overpressure shall be limited to 10% above the set pressure of the highest set valve allowed by HG-400.2 (c).

HG-400.3 Safety and Safety Relief Valves for Tanks and Heat Exchangers

(a) *Steam to Hot Water Supply.* When a hot water supply is heated indirectly by steam in a coil or pipe within the service limitations set forth in HG-101, the pressure of the steam used shall not exceed the safe working pressure of the hot water tank, and a safety relief valve at least NPS 1 (DN 25), set to relieve at or below the maximum allowable working pressure of the tank, shall be applied on the tank.

(b) *High Temperature Water to Water Heat Exchanger.*[1] When high temperature water is circulated through the coils or tubes of a heat exchanger to warm water for space heating or hot water supply, within the service limitations set forth in HG-101, the heat exchanger shall be equipped with one or more officially rated safety relief valves that are identified with the V or HV Symbol, set to relieve at or below the maximum allowable working pressure of the heat exchanger, and of sufficient rated capacity to prevent the heat exchanger pressure from rising more than 10% above the maximum allowable working pressure of the vessel.

(c) *High Temperature Water to Steam Heat Exchanger.*[14] When high temperature water is circulated through the coils or tubes of a heat exchanger to generate low pressure steam, within the service limitations set forth in HG-101, the heat exchanger shall be equipped with one or more officially rated safety valves that are identified with the V or HV Symbol, set to relieve at a pressure not to exceed 15 psi (100 kPa), and of sufficient rated capacity to prevent the heat exchanger pressure from rising more than 5 psi (35 kPa) above the maximum allowable working pressure of the vessel. For heat exchangers requiring steam pressures greater than 15 psi (100 kPa), refer to Section I or Section VIII, Division 1.

[1] Suggested installation practices for the secondary side of heat exchangers.

HG-401 MINIMUM REQUIREMENTS FOR SAFETY AND SAFETY RELIEF VALVES

HG-401.1 Mechanical Requirements

(a) The inlet opening shall have an inside diameter approximately equal to, or greater than, the seat diameter. In no case shall the maximum opening through any part of the valve be less than ¼ in. (6 mm) in diameter or its equivalent area.

(b) Safety relief valves officially rated as to capacity shall have pop action when tested by steam.

(c) O-rings or other packing devices when used on the stems of safety relief valves shall be so arranged as not to affect their operation or capacity.

(d) The design shall incorporate guiding arrangements necessary to insure consistent operation and tightness. Excessive lengths of guiding surfaces should be avoided. Bottom guided designs are not permitted on safety relief valves.

(e) Safety valves shall have a controlled blowdown of 2 psi to 4 psi (15 kPa to 30 kPa) and this blowdown need not be adjustable.

(f) *Safety valves shall be spring loaded.* The spring shall be designed so that the full lift spring compression shall be no greater than 80% of the nominal solid deflection. The permanent set of the spring (defined as the difference between the free height and height measured 10 min after the spring has been compressed solid three additional times after presetting at room temperature) shall not exceed 0.5% of the free height.

(g) There shall be a lifting device and a mechanical connection between the lifting device and the disk capable of lifting the disk from the seat a distance of at least 1/16 in. (1.5 mm) with no pressure on the boiler.

(h) A body drain below seat level shall be provided by the Manufacturer for all safety valves and safety relief valves, except that the body drain may be omitted when the valve seat is above the bottom of the inside diameter of the discharge piping. For valves exceeding NPS 2½ (DN 65) the drain hole or holes shall be tapped not less than NPS 3/8 (DN 10). For valves NPS 2½ (DN 65) or smaller, the drain hole shall not be less than ¼ in. (6 mm) in diameter. Body drain connections shall not be plugged during or after field installation. In safety relief valves of the diaphragm type, the space above the diaphragm shall be vented to prevent a buildup of pressure above the diaphragm. Safety relief valves of the diaphragm type shall be so designed that failure or deterioration of the diaphragm material will not impair the ability of the valve to relieve at the rated capacity.

(i) In the design of the body of the valve consideration shall be given to minimizing the effects of water deposits.

(j) Valves shall be provided with wrenching surfaces to allow for normal installation without damaging operating parts.

(k) The set pressure tolerances, plus or minus, of safety valves shall not exceed 2 psi (15 kPa), and for safety relief valves shall not exceed 3 psi (20 kPa) for pressures up to and including 60 psig (400 kPa) and 5% for pressures above 60 psig (400 kPa).

(l) Safety valves shall be arranged so that they cannot be reset to relieve at a higher pressure than the maximum allowable working pressure of the boiler.

HG-401.2 Material Selection

(a) Cast iron seats and disks are not permitted.

(b) adjacent sliding surfaces such as guides and disks shall both be of corrosion resistant material.

(c) Springs of corrosion resistant material or having a corrosion resistant coating are required.

(d) Material for seats and disks should be such as to provide a reasonable degree of resistance to steam cutting.

(e) Material for valve bodies and bonnets or their corresponding metallic pressure containing parts shall be listed in Section II**,** except that in cases where a manufacturer desires to make use of materials other than those listed in Section II, he shall establish and maintain specifications requiring equivalent control of chemical and physical properties and quality.

(f) Synthetic disk inserts of O-ring or other types if used shall be compatible with the maximum design temperature established for the valve.

(g) No materials liable to fail due to deterioration or vulcanization when subjected to saturated steam temperature corresponding to capacity test pressure shall be used.

HG-401.3 Manufacture and Inspection

(a) A Manufacturer shall demonstrate to the satisfaction of an ASME designee that his manufacturing, production, and testing facilities and quality control procedures will insure close agreement between the performance of random production samples and the performance of those valves submitted for capacity certification.

(b) Manufacturing, inspection, and test operations including capacity are subject to inspections at any time by an ASME designee.

(c) A Manufacturer may be granted permission to apply, the HV Code Symbol to production pressure relief valves capacity certified in accordance with HG-402.3 provided the following tests are successfully completed. This permission shall expire on the sixth anniversary of the date it is initially granted. The permission may be extended for 6 year periods if the following tests are successfully repeated within the 6 month period before expiration.

(1) Two sample production pressure relief valves of a size and capacity within the capability of an ASME accepted laboratory shall be selected by an ASME designee.

(2) Operational and capacity tests shall be conducted in the presence of an ASME designee at an ASME accepted laboratory. The valve Manufacturer shall be notified of the time of the test and may have representatives present to witness the test.

(3) Should any valve fail to relieve at or above its certified capacity or should it fail to meet performance requirements of this Section, the test shall be repeated at the rate of two replacement valves, selected in accordance with HG-401.3(c)(1), for each valve that failed.

(4) Failure of any of the replacement valves to meet the capacity or the performance requirements of this Section shall be cause for revocation within 60 days of the authorization to use the Code Symbol on that particular type of valve. During this period, the Manufacturer shall demonstrate the cause of such deficiency and the action taken to guard against future occurrence, and the requirements of HG-401.3(c) above shall apply.

(d) Safety valves shall be sealed in a manner to prevent the valve from being taken apart without breaking the seal. Safety relief valves shall be set and sealed so that they cannot be reset without breaking the seal.

HG-401.4 Manufacturer's Testing

(a) Every safety valve shall be tested to demonstrate its popping point, blowdown, and tightness. Every safety relief valve shall be tested

to demonstrate its opening point and tightness. Safety valves shall be tested on steam or air and safety relief valves on water, steam, or air. When the blowdown is nonadjustable, the blowdown test may be performed on a sampling basis.

(b) A Manufacturer shall have a well-established program for the application, calibration, and maintenance of test gages.

(c) Testing time on safety valves shall be sufficient, depending on size and design, to insure that test results are repeatable and representative of field performance.

(d) Test fixtures and test drums shall be of adequate size and capacity to assure representative pop action and accuracy of blowdown adjustment.

(e) A tightness test shall be conducted at maximum expected operating pressure, but not at a pressure exceeding the reseating pressure of the valve.

HG-401.5 Design Requirements. At the time of the submission of valves for capacity certification, or testing in accordance with this Section, the ASME Designee has the authority to review the design for conformity with the requirements of this Section, and to reject or require modification of designs that do not conform, prior to capacity testing.

HG-402 DISCHARGE CAPACITIES OF SAFETY AND SAFETY RELIEF VALVES

HG-402.1 Valve Markings. Each safety or safety-relief valve shall be plainly marked with the required data by the Manufacturer in such a way that the markings will not be obliterated in service. The markings shall be stamped, etched, impressed, or cast on the valve or on a nameplate, which shall be securely fastened to the valve.

(a) The markings shall include the following:

(1) the name or an acceptable abbreviation of the Manufacturer

(2) Manufacturer's design or type number

(3) NPS size _____ in. (DN) (the nominal pipe size of the valve inlet)

(4) set pressure _____ psi

(5) capacity _____ lb/hr (kg/hr), or capacity _____ Btu/hr in accordance with HG-402.7 (a)

(6) year built or, alternatively, a coding may be marked on the valves such that the valve Manufacturer can identify the year the valve was assembled and tested, and

(7) ASME Symbol as shown in Fig. HG-402

(b) Nameplates of safety or safety-relief valves may be marked solely in metric units under the following conditions:

(1) The pressure-relief device will be installed in a location where metric units are required or accepted by local authorities, if any.

(2) Metric units shall be those required by the user when not mandated by enforcement authorities.

(3) The Manufacturer's quality control system shall provide for the conversion from U.S. customary units to the metric units that will be marked on the nameplate.

HG-402.2 Authorization to Use ASME Stamp. Each safety valve to which the Code Symbol (Fig. HG-402) is to be applied shall be produced by a Manufacturer and/or Assembler who is in possession of a valid Certificate of Authorization. (See HG-540.) For all valves to be stamped with the HV Symbol, a Certified Individual (CI) shall provide oversight to ensure that the use of the "HV" Code symbol on a safety valve or safety relief valve is in accordance with this Section and that the use of the "HV" Code symbol is documented on a Certificate of Conformance Form, HV-1.

FIG. HG-402 OFFICIAL SYMBOL FOR STAMP TO DENOTE THE AMERICAN SOCIETY OF MECHANICAL ENGINEERS' STANDARD

(a) Requirements for the Certified Individual (CI). The CI shall

(1) be an employee of the Manufacturer.

(2) be qualified and certified by the Manufacturer. Qualification shall include the following as a minimum:

(a) knowledge of the requirements of this Section for the application of the "HV" Code Symbol

(b) knowledge of the Manufacturer's quality program

(c) training commensurate with the scope, complexity, or special nature of the activities to which oversight is to be provided

(3) have a record, maintained and certified by the Manufacturer, containing objective evidence of the qualifications of the CI and the training program provided

(b) *Duties of the Certified Individual (CI).* The CI shall

(1) verify that each item to which the Code Symbol is applied meets all applicable requirements of this Section and has a current capacity certification for the "HV" symbol

(2) review documentation for each lot of items to be stamped, to verify, for the lot, that the requirements of this Section have been completed

(3) sign the Certificate of Conformance Form (HV-1) prior to release of control of the item

(c) *Certificate of Conformance Form (HV-1*) (see Appendix N)

(1) The Certificate of Conformance shall be filled out by the Manufacturer and signed by the Certified Individual. Multiple duplicate pressure relief devices may be recorded on a single entry provided the devices are identical and produced in the same lot.

(2) The Manufacturer's written quality control program shall include requirements for completion of Certificates of Conformance forms and retention by the Manufacturer for a minimum of 5 years.

HG-402.3 Determination of Capacity to Be Stamped on Valves. The Manufacturer of the valves that are to be stamped with the Code symbol shall submit valves for testing to a place where adequate equipment and personnel are available to conduct pressure and relieving-capacity tests which shall be made in the presence of and certified by an authorized observer. The place, personnel, and authorized observer shall be approved by the Boiler and Pressure Vessel Committee. The valves shall be tested in

one of the following three methods.

(a) *Coefficient Method.* Tests shall be made to determine the lift, popping, and blowdown pressures, and the capacity of at least three valves each of three representative sizes (a total of nine valves). Each valve of a given size shall be set at a different pressure. However, safety valves for steam boilers shall have all nine valves set at 15 psig (100 kPa). A coefficient shall be established for each test as follows:

$$K_D = \frac{\text{Actual steam flow}}{\text{Theoretical steam flow}} = \text{Coefficient of discharge}$$

The average of the coefficients K_D of the nine tests required shall be multiplied by 0.90, and this product shall be taken as the coefficient K of that design. The stamped capacity for all sizes and pressures shall not exceed the value determined from the following formulas:

For 45 deg seat,

(US. Customary Units)

$$W = 51.5\ \pi DLP \times 0.707K$$

(SI Units)

$$W = 5.25\ \pi DLP \times 0.707K$$

For flat seat,

(U.S. Customary Units)

$$W = 51.5\ \pi DLPK$$

(SI Units)

$$W = 5.25\ \pi DLPK$$

For nozzle,

(U.S. Customary Units)

$$W = 51.5APK$$

(SI Units)

$$W = 5.25APK$$

where

A = nozzle-throat area

D = seat diameter

K = coefficient of discharge for the design

L = lift

P = (1.10 × set pressure + 14.7) psia or (1.10 × set pressure + 0.101) MPa, for hot water applications or

= (5.0 psi + 15 psi set + 14.7) psia or (0.035 MPa + 0.100 MPa set + 0.101) MPa, for steam boilers

W = weight of steam/hr

NOTE: The maximum and minimum coefficient determined by the tests of a valve design shall not vary more than ±5% from the average. If one or more tests are outside the acceptable limits, one valve of the Manufacturer's choice shall be replaced with another valve of the same size and pressure setting or by a modification of the original valve. Following this test a new average coefficient shall be calculated, excluding the replaced valve test. If one or more tests are now outside the acceptable limits, as determined by the new average coefficient, a valve of the Manufacturer's choice must be replaced by two valves of the same size and pressure as the rejected valve. A new average coefficient, including the replacement valves, shall be calculated. If any valve, excluding the two replaced valves, now falls outside the acceptable limits, the tests shall be considered unsatisfactory.

(b) *Slope Method.* If a Manufacturer wishes to apply the Code Symbol to a design of pressure relief valves, four valves of each combination of pipe and orifice size shall be tested. These four valves shall be set at pressures that cover the approximate range of pressures for which the valve will be used, or that cover the range available at the certified test facility that shall conduct the tests. The capacities shall be based on these four tests as follows:

(1) The slope *(W/P)* of the actual measured capacity versus the flow pressure for each test point shall be calculated and averaged:

$$\text{slope} = W/P = \frac{\text{measured capacity}}{\text{absolute flow pressure, psia}}$$

All values derived from the testing must fall within ±5% of the average value:

minimum slope = 0.95 × average slope
maximum slope = 1.05 × average slope

If the values derived from the testing do not fall between the minimum and maximum slope values, the Authorized Observer shall require that additional valves be tested at the rate of two for each valve beyond the maximum and minimum values with a limit of four additional valves.

(2) The relieving capacity to be stamped on the valve shall not exceed 90% of the average slope times the absolute accumulation pressure:

rated slope = 0.90 × average slope

stamped capacity ≤ rated slope × (1.10 × set pressure + 14.7) psia or (1.10 × set pressure + 101) kPa for hot water applications

(c) *Three-Valve Method.* If a Manufacturer wishes to apply the Code Symbol to steam safety valves or safety relief valves of one or more sizes of a design set at one pressure, he shall submit three valves of each size of each design set at one pressure for testing and the stamped capacity of each size shall not exceed 90% of the average capacity of the three valves tested.

NOTE: The discharge capacity as determined by the test of each valve tested shall not vary by more than ±5% of the average capacity of the three valves tested. If one of the three valve tests falls outside of the limits, it may be replaced by two valves and a new average calculated based on all four valves, excluding the replaced valve.

ARTICLE 6
INSTRUMENTS, FITTINGS, AND CONTROLS

HG-600 GENERAL

All instruments, fittings, and controls described in this Article shall be installed prior to operation.

HG-601 FOR STEAM HEATING BOILERS

HG-602 STEAM GAGES

(a) Each steam boiler shall have a steam gage or a compound steam gage connected to its steam space or to its water column or to its steam connection. The gage or piping to the gage shall contain a siphon or equivalent device that will develop and maintain a water seal that will prevent steam from entering the gage tube. The piping shall be so arranged that the gage cannot be shut off from the boiler except by a cock placed in the pipe at the gage and provided with a tee- or lever-handle arranged to be parallel to the pipe in which it is located when the cock is open. The gage connection boiler tapping, external siphon, or piping to the boiler shall not be less than NPS ¼ (DN 8). Where steel or wrought iron pipe or tubing is used, the boiler connection and external siphon shall be not less than NPS ½ (DN 15). Ferrous and nonferrous tubing having inside diameters at least equal to that of standard pipe sizes listed above may be substituted for pipe.

(b) The scale on the dial of a steam boiler gage shall be graduated to not less than 30 psi (200 kPa) nor more than 60 psi (414 kPa). The travel of the pointer from 0 psi to 30 psi (0 kPa to 200 kPa) pressure shall be at least 3 in. (75 mm).

HG-603 WATER GAGE GLASSES

(a) Each steam boiler shall have one or more water gage glasses attached to the water column or boiler by means of valved fittings not less than NPS ½ (DN 15), with the lower fitting provided with a drain valve of a type having an unrestricted drain opening not less than ¼ in. (6 mm) in diameter to facilitate cleaning. Gage glass replacement shall be possible with the boiler under pressure. Water glass fittings may be attached directly to a boiler.

Boilers having an internal vertical height of less than 10 in. (250 mm) may be equipped with a water level indicator of the Glass Bull's-Eye type provided the indicator is of sufficient size to show the water at both normal operating and low-water cutoff levels.

(b) The lowest visible part of the water gage glass shall be at least 1 in. (25 mm) above the lowest permissible water level recommended by the boiler Manufacturer. With the boiler operating at this lowest permissible water level, there shall be no danger of overheating any part of the boiler.

Each boiler shall be provided at the time of the manufacture with a permanent marker indicating the lowest permissible water level. The marker shall be stamped, etched, or cast in metal; or it shall be a metallic plate attached by rivets, screws, or welding; or it shall consist of material with documented tests showing its suitability as a permanent marking for the application. This marker shall be visible at all times. Where the boiler is shipped with a jacket, this marker may be located on the jacket.

NOTE: Transparent material other than glass may be used for the water gage provided that the material will remain transparent and has proved suitable for the pressure, temperature, and corrosive conditions expected in service.

(c) In electric boilers of the submerged electrode type, the water gage glass shall be so located to indicate the water levels both at startup and under maximum steam load conditions as established by the manufacturer.

(d) In electric boilers of the resistance element type, the lowest visible part of the water gage shall be located at least 1 in. (25 mm) above the lowest permissible water level specified by the Manufacturer. Each electric boiler of this type shall also be equipped with an automatic low-water cutoff on each boiler pressure vessel so located as to automatically cut off the power supply to the heating elements before the surface of the water falls below the visible part of the glass.

(e) Tubular water glasses on electric boilers having a normal water content not exceeding 100

gal (300 l) shall be equipped with a protective shield.

(f) A water level indicator using an indirect sensing method may be used in lieu of an operating water gauge glass; however, a water gauge glass must be installed and operable but may be shut off by valving. The water level indicator must be attached to a water column or directly to the boiler by means of valved fittings not less than NPS ½ (DN 15). The device shall be provided with a drain valve of a type having an unrestricted drain opening not less than ¼ in. (6 mm) in diameter to facilitate cleaning. Service and replacement of internal parts and/or housing shall be possible with the boiler under pressure.

HG-604 WATER COLUMN AND WATER LEVEL CONTROL PIPES

(a) The minimum size of ferrous or nonferrous pipes connecting a water column to a steam boiler shall be NPS 1 (DN 25). No outlet connections, except for damper regulator, feedwater regulator, steam gages, or apparatus that does not permit the escape of any steam or water except for manually operated blowdowns, shall be attached to a water column or the piping connecting a water column to a boiler (see HG-705 for introduction of feedwater into a boiler). If the water column, gage glass, low-water fuel cutoff, or other water level control device is connected to the boiler by pipe and fittings, no shutoff valves of any type shall be placed in such pipe, and a cross or equivalent fitting to which a drain valve and piping may be attached shall be placed in the water piping connection at every right angle turn to facilitate cleaning. The water column drain pipe and valve shall be not less than NPS ¾ (DN 20).

(b) The steam connections to the water column of a horizontal firetube wrought boiler shall be taken from the top of the shell or the upper part of the head, and the water connection shall be taken from a point not above the center line of the shell. For a cast iron boiler, the steam connection to the water column shall be taken from the top of an end section or the top of the steam header, and the water connection shall be made on an end section not less than 6 in. (150 mm) below the bottom connection to the water gage glass.

HG-605 PRESSURE CONTROL

Each automatically fired steam boiler shall be protected from overpressure by two pressure-operated controls.

(a) Each individual automatically fired steam boiler shall have a safety limit control that will cut off the fuel supply to prevent steam pressure from exceeding the 15 psi (100 kPa) maximum allowable working pressure of the boiler. Each control shall be constructed to prevent a pressure setting above 15 psi (100 kPa).

(b) Each individual steam boiler shall have a control that will cut off the fuel supply when the pressure reaches an operating limit, which shall be less than the maximum allowable pressure.

(c) Shutoff valves of any type shall not be placed in the steam pressure connection between the boiler and the controls described in (a) and (b) above. These controls shall be protected with a siphon or equivalent means of maintaining a water seal that will prevent steam from entering the control. The control connection boiler tapping, external siphon, or piping to the boiler shall not be less than NPS ¼ (DN 8), but where steel or wrought iron pipe or tubing is used, they shall not be less than NPS ½ (DN 15). The minimum size of an external siphon shall be NPS ¼ (DN 8) or 3/8 in. (10 mm) O.D. nonferrous tubing.

HG-606 AUTOMATIC LOW-WATER FUEL CUTOFF AND/OR WATER FEEDING DEVICE

(a) Each automatically fired steam or vapor-system boiler shall have an automatic low-water fuel cutoff so located as to automatically cut off the fuel supply before the surface of the water

falls below the lowest visible part of the water gage glass. If a water feeding device is installed, it shall be so constructed that the water inlet valve cannot feed water into the boiler through the float chamber and so located as to supply requisite feedwater.

(b) Such a fuel cutoff or water feeding device may be attached directly to a boiler. A fuel cutoff or water feeding device may also be installed in the tapped openings available for attaching a water glass direct to a boiler, provided the connections are made to the boiler with nonferrous tees or Y's not less than NPS ½ (DN 15) between the boiler and the water glass so that the water glass is attached directly and as close as possible to the boiler; the run of the tee or Y shall take the water glass fittings, and the side outlet or branch of the tee or Y shall take the fuel cutoff or water feeding device. The ends of all nipples shall be reamed to full-size diameter.

(c) Fuel cutoffs and water feeding devices embodying a separate chamber shall have a vertical drain pipe and a blowoff valve not less than NPS ¾ (DN 20), located at the lowest point in the water equalizing pipe connections so that the chamber and the equalizing pipe can be flushed and the device tested.

HG-607 MODULAR STEAM HEATING BOILERS

(a) Each module of a modular steam heating boiler shall

be equipped with

(1) steam gage, see HG-602

(2) water gage glass, see HG-603

(3) a pressure control that will cut off the fuel supply when the pressure reaches an operating limit, which shall be less than the maximum allowable pressure

(4) low water cutoff, see HG-606

(b) The assembled modular steam boiler shall also be equipped with a safety limit control that will cut off the fuel supply to prevent steam pressure from exceeding the 15 psi (100 kPa) maximum allowable working pressure of the boiler. The control shall be constructed to prevent pressure setting above 15 psi (100 kPa).

HG-610 FOR HOT WATER HEATING OR HOT WATER SUPPLY BOILERS

HG-611 PRESSURE OR ALTITUDE GAGES

(a) Each hot water heating or hot water supply boiler shall have a pressure or altitude gage connected to it or to its flow connection in such a manner that it cannot be shut off from the boiler except by a cock with tee or lever handle, placed on the pipe near the gage. The handle of the cock shall be parallel to the pipe in which it is located when the cock is open.

(b) Mechanical Gages (Analog). The scale on the dial of the pressure or altitude gage shall be graduated to not less than 1½ nor more than 3½ times the pressure at which the safety relief valve is set.

(c) Electronic gages used in lieu of mechanical' gages shall meet the following requirements:

(1) Gage shall be powered from the boiler power supply and it shall have a display that remains on at all times. The gage shall have a backup power supply.

(2) The full scale range of the transducer must be a minimum of 1½ times the pressure at which the safety relief valve is set. It shall be accurate to within ±2% of full scale.

(3) The transducer shall have a media compatibility of both liquids and gases and be temperature compensated.

(4) The gage shall have an operating temperature range of 32°F to 250°F (O°C to 120°C) unless otherwise required by the application.

(d) Piping or tubing for pressure- or altitude'-gage connections shall be of nonferrous metal when smaller than NPS 1 (DN 25).

HG-612 THERMOMETERS/TEMPERATURE SENSORS

Each hot water heating or hot water supply boiler shall have a thermometer or temperature sensor with display so located and connected that it shall be easily readable. The thermometer or sensor shall be so located that it shall at all times indicate the temperature of the water in the boiler at or near the outlet.

(a) Thermometer shall have a minimum full scale range of 5O°F to 250°F (10°C to 120°C).

(b) Electronic temperature sensor used in lieu of a thermometer shall meet the following requirements:

(1) The sensor shall be powered from the boiler power supply and it shall have a display that remains on at all times. The gage shall have a backup power supply.

(2) The full scale of the sensor and display must be a minimum of 250°F (120°C). It shall be accurate to within: ±1 deg.

(3) The sensor shall have a minimum operating temperature range of 32°F to 300°F (0°C to 150°C).

(4) The display shall have an ambient operating temperature range of 32°F to 120°F (0°C to 50°C) unless otherwise required by the application.

HG-613 TEMPERATURE CONTROL

Each automatically fired hot water heating or hot water supply boiler shall be protected from over-temperature by two temperature-operated controls.

(a) Each individual automatically fired hot water heating or hot water supply boiler shall have a high temperature limit control that will cut off the fuel supply to prevent water temperature from exceeding its marked maximum water temperature at the boiler outlet. This control shall be constructed to prevent a temperature setting above the maximum.

(b) Each individual hot water heating or hot water supply boiler shall have a control that will cut off the fuel supply when the system water temperature reaches a preset operating temperature, which shall be less than the maximum water temperature.

HG-614 LOW-WATER FUEL CUTOFF

(a) Each automatically fired hot water boiler with heat input greater than 400,000 Btu/hr (117 kW) shall have an automatic low-water fuel cutoff that has been designed for hot water service, and it shall be so located as to automatically cut off the fuel supply when the surface of the water falls to the level established in (b) below (see Fig. HG-703.2).

(b) As there is no normal waterline to be maintained in a hot water boiler, any location of the low-water fuel cutoff above the lowest safe permissible water level established by the boiler manufacturer is satisfactory.

(c) A coil-type boiler or a watertube boiler with heat input greater than 400,000 Btu/hr (117 kW) requiring forced circulation to prevent overheating of the coils or tubes shall have a flow-sensing device installed in lieu of the low-water fuel cutoff required in (a) above to automatically cut off the fuel supply when the circulating flow is interrupted.

(d) A means shall be provided for testing the operation of the external low-water fuel cutoff without resorting to draining the entire system. Such means shall not render the device inoperable except as described as follows. If the means temporarily isolates the device from the boiler during this testing, it shall automatically return to its normal position. The connection may be so arranged that the device cannot be shut off from the boiler except by a cock placed at the device and provided with a tee or lever-handle arranged to be parallel to the pipe in which it is located when the cock is open.

HG-615 MODULAR HOT WATER HEATING BOILERS

(a) Each module of a modular hot water heating boiler shall be equipped with

(1) pressure/altitude gage, see HG-611

(2) thermometer, see HG-612

(3) temperature control that will cut off the fuel supply when the temperature reaches an operating limit, which shall be less than the maximum allowable temperature

(b) The assembled modular hot water heating boiler shall also be equipped with

(1) a safety limit control that will cut off the fuel supply to prevent the water temperature from exceeding the maximum allowable temperature at the boiler outlet. The control shall be constructed to prevent a temperature setting above the maximum. This control shall be located within 3 ft. (1.0 m) of the fitting connecting the last module to the heating supply piping.

(2) low water fuel cutoff, see HG-614.

HG-620 FOR ALL BOILERS

HG-621 INSTRUMENTS, FITTINGS, AND CONTROLS MOUNTED INSIDE BOILER JACKETS

Any or all instruments, fittings, and controls required by these rules may be installed inside of boiler jackets provided the water gage on a steam boiler is accessible without the use of tools and provided the water gage and pressure gage on a steam boiler or the thermometer and pressure gage on a water boiler are visible through an opening or openings at all times.

HG-630 ELECTRIC WIRING

HG-631 ELECTRICAL CODE COMPLIANCE

All field wiring for controls, heat generating apparatus, and other appurtenances necessary for the operation of the boiler or boilers should be installed in accordance with the provisions of the National Electric Code and/or should comply with the applicable local electrical codes. All boilers supplied with factory mounted and wired controls, heat generating apparatus, and other appurtenances necessary for the operation of the boilers should be installed in accordance with the provisions of the nationally recognized standards such as listed in footnote 2 [17]of HG-640.

HG-632 TYPE CIRCUITRY TO BE USED

Whether field or factory wired, the control circuitry shall be positively grounded and shall operate at 150 V or less. One of the two following systems may be employed to provide the control circuit.

(a) *Two-Wire Nominal 120 V System With Separate Equipment Ground Conductor*

(1) This system shall consist of the line, neutral, and equipment ground conductors. The control panel frame and associated control circuitry metallic enclosures shall be electrically continuous and be bonded to the equipment ground conductor.

(2) The equipment ground conductor and the neutral conductor shall be bonded together at their origin in the electrical system as required by the NEC.[1]

[1] See Appendix H.

(3) The line side of the control circuit shall be provided with a time delay fuse sized as small as practicable.

(b) *Two-Wire Nominal 120 V System Obtained By Using an Isolation Transformer*

(1) The two-wire control circuit shall be obtained from the secondary side of an isolation transformer. One wire from the secondary of this transformer shall be electrically continuous and shall be bonded to a convenient cold water pipe. All metallic enclosures of control components shall be securely bonded to this ground control circuit wire. The primary side of the isolation transformer will normally be a two-wire source with a potential of 230 V or 208 V or 440 V.

(2) Both sides of the two-wire primary circuit shall be fused. The hot leg on the load side of the

isolation transformer shall be fused as small as practicable and in no case fused above the rating of the isolation transformer.

HG-633 LIMIT CONTROLS

Limit controls shall be wired on the hot or line side of the control circuit.

HG-634 SHUTDOWN SWITCHES AND CIRCUIT BREAKERS

A manually operated remote heating plant shutdown switch or circuit breaker should be located just outside the boiler room door and marked for easy identification. Consideration should also be given to the type and location of the switch to safeguard against tampering. If the boiler room door is on the building exterior the switch should be located just inside the door. If there is more than one door to the boiler room, there should be a switch located at each door.

(a) For atmospheric-gas burners, and oil burners where a fan is on a common shaft with the oil pump, the complete burner and controls should be shut off.

(b) For power burners with detached auxiliaries, only the fuel input supply to the firebox need be shut off.

HG-640 CONTROLS AND HEAT GENERATING APPARATUS

(a) Oil and gas-fired and electrically heated boilers should be equipped with suitable primary (flame safeguard) safety controls, safety limit switches, and burners or electric elements as required by a nationally recognized standard.[2]

[2] Examples of these nationally recognized standards are:

American National Standard/CSA Standard Z21.13lCSA 4.9 for Gas-Fired Low Pressure Steam and Hot Water Boilers.

American National Standard/CSA Standard Z21.171CSA 2.7 for Domestic Gas Conversion Burners.

Underwriters Laboratories, Inc., UL 296, Standards for Safety, Oil Burners.

Underwriters Laboratories, Inc., UL 726, Standards for Safety, Oil Fired Boiler Assemblies.

Underwriters Laboratories, Inc., UL 795, Standards for Safety, Commercial-Industrial Gas-Heating Equipment.

Underwriters Laboratories, Inc., UL 834, Electric Heating, Water Supply and Power Boilers.

(b) The symbol of the certifying organization[3] that has investigated such equipment as having complied with a nationally recognized standard shall be affixed to the equipment and shall be considered as evidence that the unit was manufactured in accordance with that standard.

[3] A certifying organization is one that provides uniform testing, examination, and listing procedures under established, nationally recognized standards and that is acceptable to the authorities having jurisdiction.

ARTICLE 7
INSTALLATION REQUIREMENTS

HG-700 INSTALLATION REQUIREMENTS, ALL BOILERS

HG-701 MOUNTING SAFETY AND SAFETY RELIEF VALVES

HG-701.1 Permissible Mounting. Safety valves and safety relief valves shall be located in the top or side[1] of the boiler. They shall be connected directly to a tapped or flanged opening in the boiler, to a fitting connected to the boiler by a short nipple, to a Y-base, or to a valveless header connecting steam or water outlets on the same boiler. Coil or header type boilers shall have the safety valve or safety relief valve located on the steam or hot water outlet end. Safety valves and safety relief valves shall be installed with their spindles vertical. The opening or connection between the boiler and any safety valve or safety relief valve shall have at least the area of the valve inlet.

[1] The top or side of the boiler shall mean the highest practicable part of the boiler proper but in no case shall the safety valve be located below the normal operating level and in no case shall the safety relief valve be located below the lowest permissible water level.

HG-701.2 Requirements for Common Connections for Two or More Valves

(a) When a boiler is fitted with two or more safety valves on one connection, this connection shall have a cross-sectional area not less than the combined areas of inlet connections of all the safety valves with which it connects.

(b) When a Y-base is used, the inlet area shall be not less than the combined outlet areas. When the size of the boiler requires a safety valve or safety relief valve larger than 4½ in. (115 mm) in diameter, two or more valves having the required combined capacity shall be used. When two or more valves are used on a boiler, they may be single, directly attached, or mounted on a Y-base.

HG-701.3 Threaded Connections. A threaded connection may be used for attaching a valve.

HG-701.4 Prohibited Mountings. Safety and safety relief valves shall not be connected to an internal pipe in the boiler.

HG-701.5 Use of Shutoff Valves Prohibited. No shutoff of any description shall be placed between the safety or safety relief valve and the boiler, or on discharge pipes between such valves and the atmosphere.

HG-701.6 Safety and Safety Relief Valve Discharge Piping

(a) A discharge pipe shall be used. Its internal cross-sectional area shall be not less than the full area of the valve outlet or of the total of the valve outlets discharging thereinto and shall be as short and straight as possible and so arranged as to avoid undue stress on the valve or valves. A union may be installed in the discharge piping close to the valve outlet. When an elbow is placed on a safety or safety relief valve discharge pipe, it shall be located close to the valve outlet downstream of the union.

(b) The discharge from safety or safety relief valves shall be so arranged that there will be no danger of scalding attendants. The safety or safety relief valve discharge shall be piped away from the boiler to the point of discharge, and there shall be provisions made for properly draining the piping. The size and arrangement of discharge piping shall be independent of other discharge piping and shall be such that any pressure that may exist or develop will not reduce the relieving capacity of the relieving devices below that required to protect the boiler.

HG-701.7 Temperature and Pressure Safety Relief Valves. Hot water heating or supply boilers limited to a water temperature of 210°F (99°C) may have one or more officially rated temperature and pressure safety relief valves installed. The requirements of HG-701.1 through HG-701.6 shall be met, except as follows:

(a) A Y-type fitting shall not be used.

(b) If additional valves are used they shall be temperature and pressure safety relief valves.

(c) When the temperature and pressure safety relief valve is mounted directly on the boiler with no more than 4 in. (100 mm) maximum interconnecting piping, the valve may be installed in the horizontal position with the outlet pointed down.

HG-703 PIPING[2]

[2] Guidance for the design of piping systems may be found in ASME B31.9, Building Services Piping.

HG-703.1 Provisions for Expansion and Contraction. Provisions shall be made for the expansion and contraction of steam and hot water mains connected to boilers by providing substantial anchorage at suitable points and by providing swing joints when boilers are installed in batteries, so there will be no undue strain transmitted to the boilers. See Figs. HG-703.1(a), HG-703.1(b), and HG-703.2 for typical schematic arrangements of piping incorporating strain absorbing joints for steam and hot water heating boilers.

HG-703.2 Return Pipe Connections

(a) The return pipe connections of each boiler supplying a gravity return steam heating system shall be so arranged as to form a loop substantially as shown in Fig. HG-703.l(b) so that the water in each boiler cannot be forced out below the safe water level.

(b) For hand-fired boilers with a normal grate line, the recommended pipe sizes detailed as “A” in Fig. HG-703.1 are NPS 1½ (DN 40) for 4 ft^2

(0.37 m^2) or less firebox area at the normal grate line, NPS 2½ (DN 65) for areas more than 4 ft^2 (0.37 m^2) up to 14.9 ft^2 (1.4 m^2), and NPS 4 (DN 100) for 15 ft^2 (1.4 m^2) or more.

(c) For automatically fired boilers that do not have a normal grate line, the recommended pipe sizes detailed as "A" in Fig. HG-703.1 are NPS 1½ (DN 40) for boilers with minimum safety valve relieving capacity 250 lb/hr (113 kg/hr) or less, NPS 2½ (DN 65) for boilers with minimum safety valve relieving capacity from 251 lb/hr (114 kg/hr) to 2,000 lb/hr (900 kg/hr), inclusive, and NPS 4 (DN 100) for boilers with more than 2,000 lb/hr (900 kg/hr) minimum safety valve relieving capacity.

(d) Provision shall be made for cleaning the interior of the return piping at or close to the boiler. Washout openings may be used for return pipe connections and the washout plug placed in a tee or a cross so that the plug is directly opposite and as close as possible to the opening in the boiler.

FIG. HG-703.1(a) STEAM BOILERS IN BATTERY — PUMPED RETURN — ACCEPTABLE PIPING INSTALLATION

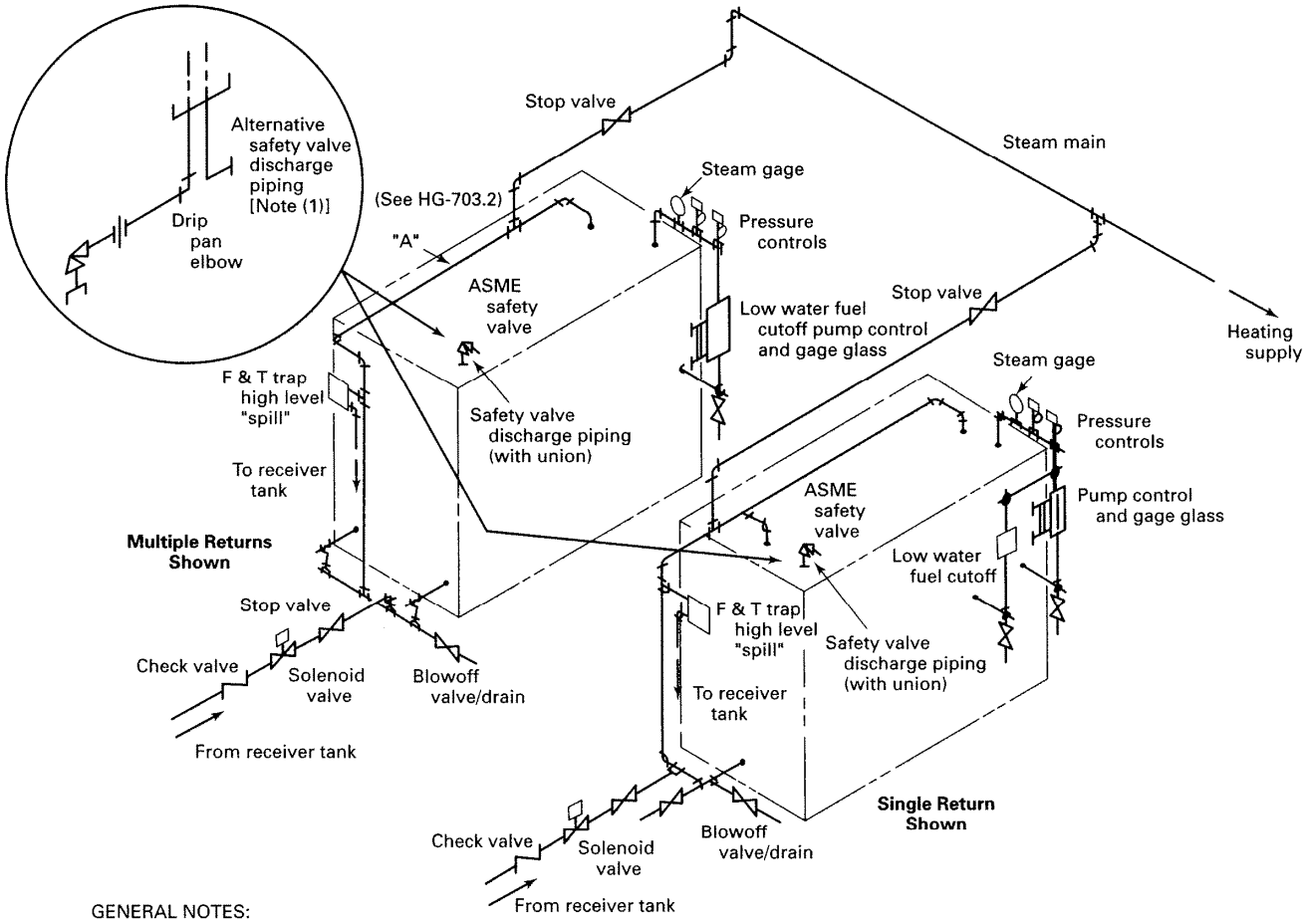

GENERAL NOTES:

(a) Return connections shown for a multiple boiler installation may not always insure that the system will operate properly. In order to maintain proper water levels in multiple boiler installations, it may be necessary to install supplementary controls or suitable devices.

(b) Plumbing codes may require the installation of a reduced pressure principle backflow preventer on a boiler when the makeup water source is from a potable water supply.

NOTE:

(1) Recommended for 1 in. (DN 25) and larger safety valve discharge.

FIG. HG-703.1(b) STEAM BOILERS IN BATTERY — GRAVITY RETURN — ACCEPTABLE PIPING INSTALLATION

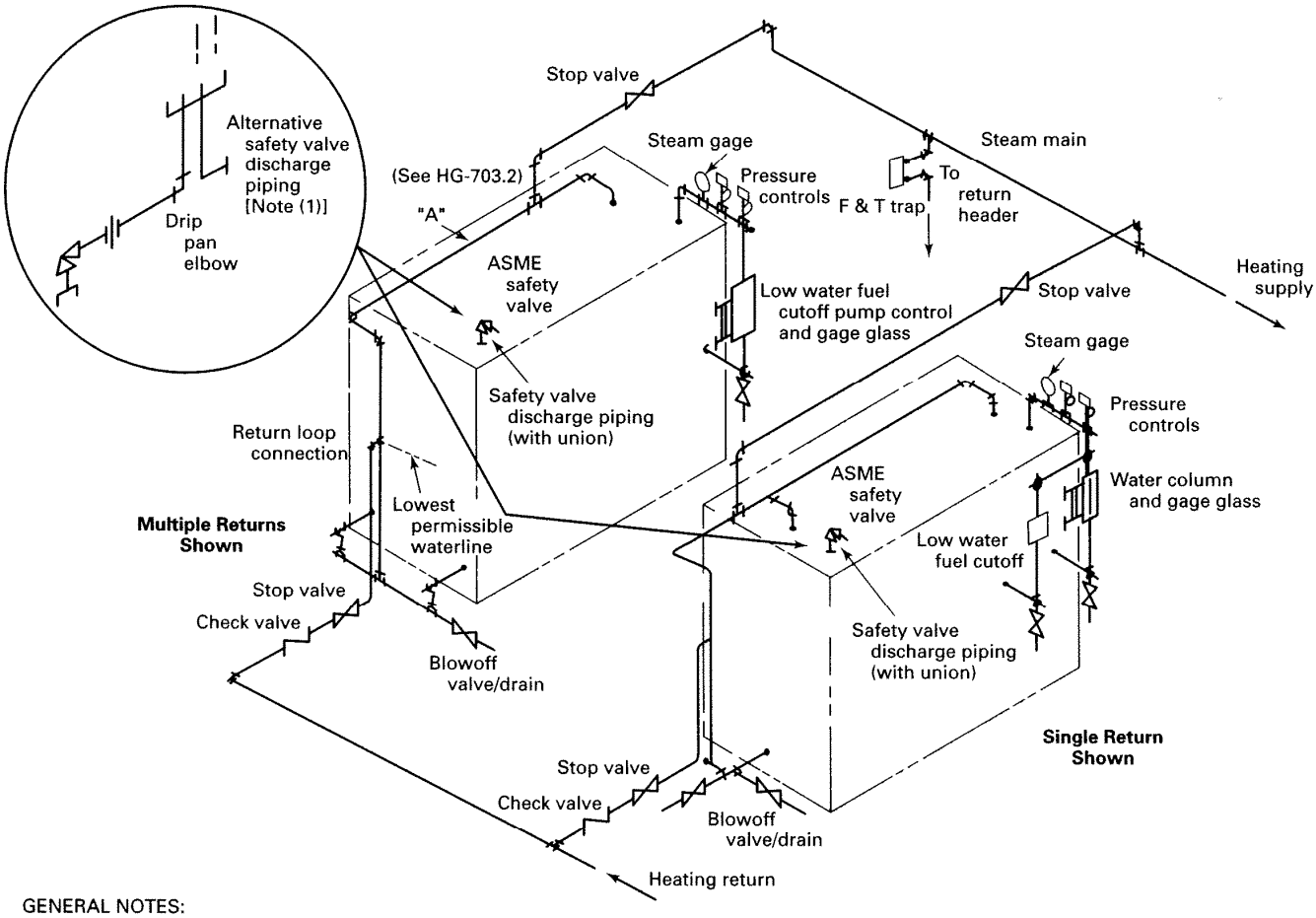

GENERAL NOTES:

(a) Return connections shown for a multiple boiler installation may not always insure that the system will operate properly. In order to maintain proper water levels in multiple boiler installations, it may be necessary to install supplementary controls or suitable devices.

(b) Plumbing codes may require the installation of a reduced pressure principle backflow preventer on a boiler when the makeup water source is from a potable water supply.

NOTE:

(1) Recommended for 1 in. (DN 25) and larger safety valve discharge.

FIG. HG-703.2 HOT WATER BOILERS IN BATTERY — ACCEPTABLE PIPING INSTALLATION

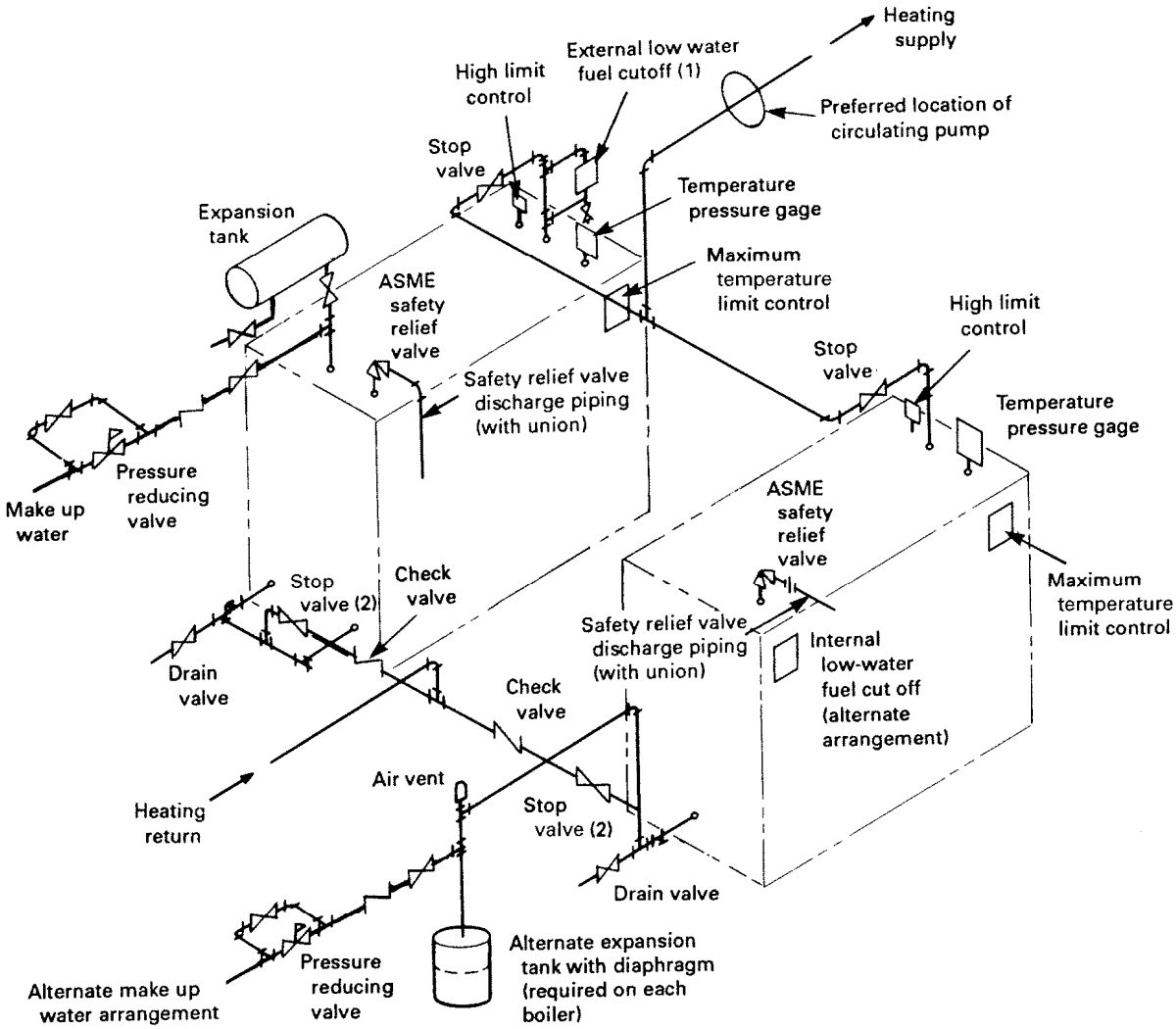

GENERAL NOTE: Plumbing codes may require the installation of a reduced pressure principle backflow preventer on a boiler when the makeup water source is from a potable water supply.

NOTES:

(1) Recommended control. See HG-614. Acceptable shutoff valves or cocks in the connecting piping may be installed for convenience of control testing and/or service.

(2) The common return header stop valves may be located on either side of the check valves.

HG-705 FEEDWATER AND MAKEUP WATER CONNECTIONS

(a) *Steam Boilers.* Feedwater or water treatment shall be introduced into a boiler through the return piping system. Alternatively, feedwater or water treatment may be introduced through an independent connection. The water flow from the independent connection shall not discharge directly against parts of the boiler exposed to direct radiant heat from the fire. Feedwater or water treatment shall not be introduced through openings or connections provided for inspection or cleaning, safety valve, water column, water gage glass, or pressure gage. The feedwater pipe shall be provided with a check valve or a backflow preventer containing a check valve[3] near the boiler and a stop valve or cock between the check valve and the boiler or between the check valve and the return pipe system.

(b) *Hot Water Boilers.* Makeup water may be introduced into a boiler through the piping system or through an independent connection. The water flow from the independent connection shall not discharge directly against parts of the boiler exposed to direct radiant heat from the fire. Makeup water shall not be introduced through openings or connections provided exclusively for inspection or cleaning, safety relief valve, pressure gage, or temperature gage. The makeup water pipe shall be provided with a check valve or a backflow preventer containing a check valve[3] near the boiler and a stop valve or cock between the check valve and the boiler or between the check valve and the piping system.

[3] Plumbing codes may require the installation of a reduced pressure principle backflow preventer on a boiler when the makeup water source is from a potable water supply.

HG-707 OIL HEATERS

(a) A heater for oil or other liquid harmful to boiler operation shall not be installed directly in the steam or water space within a boiler.

(b) Where an external type heater for such service is used, means shall be provided to prevent the introduction into the boiler of oil or other liquid harmful to boiler operation.

HG-708 STORAGE TANKS FOR HOT WATER SUPPLY SYSTEMS

If a system is to utilize a storage tank that exceeds the capacity exception of HLW-101.2 (c), the tank shall be constructed in accordance with the rules of Part HLW; Section VIII, Division 1; or Section X. For tanks constructed to Section X, the maximum allowable temperature marked on the tank shall equal or exceed the maximum water temperature marked on the boiler.

HG-709 PROVISIONS FOR THERMAL EXPANSION IN HOT WATER SYSTEMS

All hot water heating systems incorporating hot water tanks or fluid relief columns shall be so installed as to prevent freezing under normal operating conditions.

HG-709.1 Heating Systems With Open Expansion Tank. An indoor overflow from the upper portion of the expansion tank shall be provided in addition to an open vent, the indoor overflow to be carried within the building to a suitable plumbing fixture or the basement.

HG-709.2 Closed Heating Systems. An expansion tank shall be installed that will be consistent with the volume and capacity of the system. If the system is designed for a working pressure of 30 psi (200 kPa) or less, the tank shall be suitably designed for a minimum hydrostatic test pressure of 75 psi (520 kPa). Expansion tanks for systems designed to operate above 30 psi (200 kPa) shall be constructed in accordance with Section VIII, Division 1. Alternatively, a tank built to Section X requirements may be used if the pressure and temperature ratings of the tank are equal to or greater than the pressure and temperature ratings of the system. Provisions shall be made for

draining the tank without emptying the system, except for prepressurized tanks.

The minimum capacity of the closed type expansion tank may be determined from Table HG-709.2 or from the following formula where the necessary information is available:

(U.S. Customary Units)

$$V_t = [(0.00041T - 0.0466)V_s]/[(P_a/P_f) - (P_a/P_o)]$$

(SI Units)

$$V_t = [(0.18155T - 8.236)V_s]/[(P_a/P_f) - (P_a/P_o)]$$

where

P_a = atmospheric pressure

P_f = fill pressure

P_o = maximum operating pressure

T = average operating temperature

V_s = volume of system, not including tanks

V_t = minimum volume of tanks

TABLE HG-709.2
EXPANSION TANK CAPACITIES FOR FORCED HOT WATER SYSTEMS
[Based on average operating water temperature 195°F (90°C), fill pressure 12 psig (83 kPa), and maximum operating pressure 30 psig (200 kPa)]

System Volume, gal (m^3)	Tank Capacities, gal (m^3)	
	Prepressurized Diaphragm Type	Nonpressurized Type
100 (0.38)	9 (0.034)	15 (0.057)
200 (0.76)	17 (0.064)	30 (0.114)
300 (1.14)	25 (0.095)	45 (0.170)
400 (1.51)	33 (0.125)	60 (0.227)
500 (1.89)	42 (0.159)	75 (0.284)
1,000 (3.79)	83 (0.314)	150 (0.568)
2,000 (7.57)	165 (0.625)	300 (1.136)

GENERAL NOTE: System volume includes volume of water in boiler, radiation, and piping, not including the expansion tank. Expansion tank capacities are based on an acceptance factor of 0.4027 for prepressurized types and 0.222 for nonprepressurized types. A procedure for estimating system volume and determining expansion tank sizes for other design conditions may be found in Chapter 12 of the 1996 HVAC Systems and Equipment Volume of the ASHRAE Handbook.

HG-709.3 Hot Water Supply Systems. If a system is equipped with a check valve or pressure reducing valve in the cold water inlet line, consideration should be given to the installation of an airtight expansion tank or other suitable air cushion. Otherwise, due to the thermal expansion of the water, the safety relief valve may lift periodically. If an expansion tank is provided, it shall be constructed in accordance with Section VIII, Division 1 or Section X. Except for prepressurized tanks, which should be installed on the cold water side, provisions shall be made for draining the tank without emptying the system. See Fig. HLW-809.1 for a typical acceptable installation.

HG-710 STOP VALVES

HG-710.1 For Single Steam Boilers. When a stop valve is used in the supply pipe connection of a single steam boiler, there shall be one used in the return pipe connection.

HG-710.2 For Single Hot Water Heating Boilers

(a) Stop valves shall be located at an accessible point in the supply and return pipe connections as near the boiler nozzle as is convenient and practicable, of a single hot water heating boiler installation to permit draining the boiler without emptying the system.

(b) When the boiler is located above the system and can be drained without draining the system, stop valves may be eliminated.

HG-710.3 For Multiple Boiler Installations. A stop valve shall be used in each supply and return pipe connection of two or more boilers connected to a common system. See Figs. HG-703.1 and HG-703.2.

HG-710.4 Type of Stop Valve(s)

(a) All valves or cocks shall conform with the applicable portions of HF-203 and may be ferrous or nonferrous.

(b) The minimum pressure rating of all valves or cocks shall be at least equal to the pressure stamped upon the boiler, and the temperature rating of such valves or cocks, including all

internal components, shall be not less than 250°F (120°C).

(c) Valves or cocks shall be flanged, threaded, or have ends suitable for welding or brazing.

(d) All valves or cocks with stems or spindles shall have adjustable pressure type packing glands and, in addition, all plug type cocks shall be equipped with a guard or gland. The plug or other operating mechanism shall be distinctly marked in line with the passage to indicate whether it is opened or closed.

(e) All valves or cocks shall have tight closure when under boiler hydrostatic test pressure.

HG-710.5 Identification of Stop Valves by Tags. When stop valves are used, they shall be properly designated substantially as follows by tags of metal or other durable material fastened to them:

Supply Valve - Number ( )

Do Not Close Without Also Closing Return Valve - Number ( )

Return Valve - Number ( )

Do Not Close Without Also Closing Supply Valve - Number ( )

HG-715 BOTTOM BLOWOFF AND DRAIN VALVES

(a) *Bottom Blowoff Valve.* Each steam boiler shall have a bottom blowoff connection fitted with a valve or cock connected to the lowest water space practicable with a minimum size as shown in Table HG-715. The discharge piping shall be full size to the point of discharge.

TABLE HG-715
SIZE OF BOTTOM BLOWOFF PIPING, VALVES, AND COCKS

Minimum Required Safety Valve Capacity, lb (kg) of steam/hr [Note (1)]	Blowoff Piping, Valves, and Cocks Min. Size NPS (DN)
Up to 500 (225)	¾ (20)
501 to 1,250 (225 to 550)	1 (25)
1,251 to 2,500 (550 to 1 200)	1¼ (32)
2,501 to 6,000 (1 200 to 2 700)	1½ (40)
6,001 (2 700) and larger	2 (50)

NOTE: (1) To determine the discharge capacity of safety relief valves in terms of Btu, the relieving capacity in lb of steam/hr is multiplied by 1,000.

(b) Boilers having a capacity of 25 gal (95 l) or less are exempt from the above requirements, except that they must have an NPS ¾ (DN 20) minimum drain valve.

(c) *Drain Valve.* Each steam or hot water boiler shall have one or more drain connections, fitted with valves or cocks. These shall be connected at the lowest practicable point on the boiler, or to the lowest point on piping connected to the boiler, at the lowest practicable point on the boiler. The minimum size of the drain piping, valves, and cocks shall be NPS ¾ (DN 20). The discharge piping shall be full size to the point of discharge. When the blowoff connection is located at the lowest water containing space, a separate drain connection is not required.

(d) *Minimum Pressure Rating.* The minimum pressure rating of valves and cocks used for blowoff or drain purposes shall be at least equal to the pressure stamped on the boiler but in no case less than 30 psi (200 kPa). The temperature rating of such valves and cocks shall not be less than 250°F (120°C).

HG-716 MODULAR BOILERS

(a) *Individual Modules*

(1) The individual modules shall comply with all the requirements of Part HG, except as specified in HG-607, HG-615, and this paragraph. The individual modules shall be limited to a maximum input of 400,000 Btuh (gas), 3 gal/hr (1 l/hr) (oil), or 117 kW (electricity).

(2) Each module of a steam heating boiler shall be equipped with

(a) safety valve, see HG-701

(b) blowoff valve, see HG-7 15 (a)

(c) drain valve, see HG-715 (c)

(3) Each module of a modular hot water heating boiler shall be equipped with

(a) safety relief valve, see HG-701

(b) drain valve, see HG-715 (c)

(b) *Assembled Modular Boilers*

(1) The individual modules shall be manifolded together at the job-site without any intervening valves. The header or manifold piping is field piping and is exempt from Article 2, Part HG, HF, HB, or HC.

(2) The assembled modular steam heating boiler shall also be equipped with

(a) feedwater connection, see HG-705 (a)

(b) return pipe connection, see HG-703.2

(3) The assembled modular hot water heating boiler shall also be equipped with

(a) makeup water connection, see HG-705 (b)

(b) provision for thermal expansion, see HG-709

(c) stop valves, see HG-710.2

HG-720 SETTING

Boilers of wrought materials of the wet-bottom type having an external width of over 36 in. (900 mm) shall have not less than 12 in. (300 mm) between the bottom of the boiler and the floorline, with access for inspection. When the width is 36 in. (900 mm) or less, the distance between the bottom of the boiler and the floorline shall be not less than 6 in. (150 mm), except that, when any part of the wet bottom is not farther from an outer edge than 12 in. (300 mm), this distance shall be not less than 4 in. (100 mm).

HG-725 METHODS OF SUPPORT

HG-725.1 Loadings

(a) The design and attachment of lugs, hangers, saddles, and other supports shall take into account the stresses due to hydrostatic head in determining the minimum thicknesses required. Additional stresses imposed by effects other than working pressure or static head, which increase the average stress by more than 10% of the allowable working stress, shall also be taken into account. These effects include the weight of the component and its contents, and the method of support.

(b) In applying the requirements of (a) above, localized stresses due to concentrated support loads, temperature

changes, and restraint against dilation of the boiler due to pressure shall be provided for. Lugs, hangers, brackets, saddles, and pads shall conform satisfactorily to the shape of the shell or surface to which they are attached or are in contact.

HG-725.2 Boilers Over 72 in. (1 800 mm) in Diameter. A horizontal-return tubular boiler over 72 in. (1 800 mm) in diameter shall be supported from steel hangers by the outside-suspension type of setting, independent of the furnace wall. The hangers shall be so designed that the load is properly distributed.

HG-725.3 Boilers Over 54 in. (1 400 mm) up to 72 in. (1 800 mm) in Diameter. A horizontal-return tubular boiler over 54 in. (1 400 mm) and up to and including 72 in. (1 800 mm) in diameter shall be supported by the outside-suspension type of setting, or at four points by not less than eight steel brackets set in pairs, the brackets of each pair to be spaced not over 2 in. (50 mm) apart and the load to be equalized between them. [See Fig. HG-725(a).]

HG-725.4 Boilers up to 54 in. (1 400 mm) in Diameter. A horizontal-return tubular boiler up to and including 54 in. (1 400 mm) in diameter shall be supported by the outside-suspension type of setting, or by not less than two steel brackets on each side.

HG-725.5 Supporting Members. If the boiler is supported by structural steel work, the steel

supporting members shall be so located or insulated that the heat from the furnace can not impair their strength.

HG-725.6 Lugs or Hangers. Lugs, hangers, or brackets made of materials in accordance with the Code requirements may be attached by fusion welding provided they are attached by fillet welds along the entire periphery or contact edges. Figure HG-725(b) illustrates an acceptable design of hanger bracket with the additional requirement that the center pin be located at the vertical center line over the center of the welded contact surface. The bracket plates shall be spaced at least 2½ in. (64 mm) apart, but this dimension shall be increased if necessary to permit access for the welding operation. The stresses computed by dividing the total load on each lug, hanger, or bracket, by the minimum cross-sectional area of the weld shall not exceed 2800 psi (19 MPa). Where it is impractical to attach lugs, hangers, or brackets by welding, studs with not less than 10 threads/in. (approx. 4 threads/cm) may be used. In computing the shearing stresses, the root area at the bottom of the thread shall be used. The shearing and crushing stresses on studs shall not exceed 8% of the strength given in Table HF-300.1 for bolting materials.

HG-725.7 Settings. Boilers of wrought materials of the wet-bottom type having an external width of over 36 in. (900 mm) shall be supported so as to have a minimum clearance of 12 in. (300 mm), between the bottom of the boiler and the floor, to facilitate inspection. When the width is 36 in. (900 mm) or less, the clearance between the bottom of the boiler and the floorline shall be not less than 6 in. (150 mm), except when any part of the wet bottom is not farther from the outer edge than 12 in. (300 mm). This clearance shall be not less than 4 in. (100 mm). Boiler insulation, saddles, or other supports shall be arranged so that inspection openings are readily accessible.

FIG. HG-725(a) SPACING AND WELD DETAILS FOR SUPPORTING LUGS IN PAIRS ON HORIZONTAL-RETURN TUBULAR BOILER

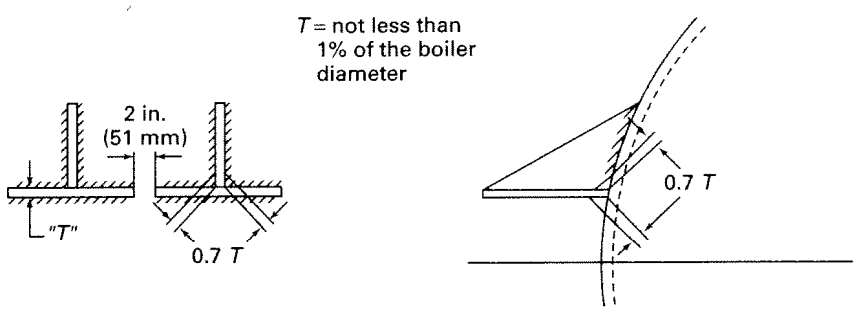

FIG. HG-725(b) WELDED BRACKET CONNECTION FOR HORIZONTAL-RETURN TUBULAR BOILER

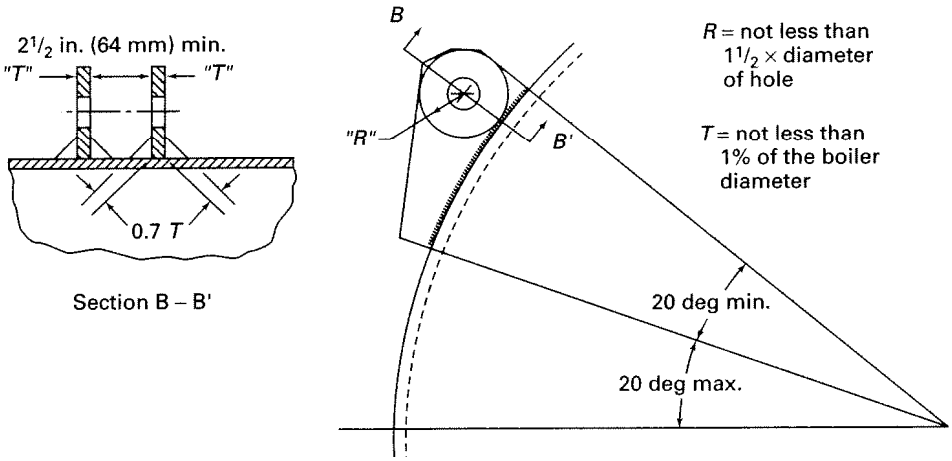

EXCERPTS FROM: ASME BOILER AND PRESSURE VESSEL CODE SECTION VIII - RULES FOR CONSTRUCTION OF PRESSURE VESSELS

2010 EDITION

INTRODUCTION
SCOPE

U-1 SCOPE

U-1 (a)

U-1(a)(1) The Foreword provides the basis for the rules described in this Division.

U-1(a)(2) For the scope of this Division, pressure vessels are containers for the containment of pressure, either internal or external. This pressure may be obtained from an external source, or by the application of heat from a direct or indirect source, or any combination thereof.

U-1(a)(3) This Division contains mandatory requirements, specific prohibitions, and nonmandatory guidance for pressure vessel materials, design, fabrication, examination, inspection, testing, certification, and pressure relief. The Code does not address all aspects of these activities, and those aspects which are not specifically addressed should not be considered prohibited. Engineering judgment must be consistent with the philosophy of this Division, and such judgments must never be used to overrule mandatory requirements or specific prohibitions of this Division. See also informative and nonmandatory guidance regarding metallurgical phenomena in Appendix A of Section II, Part D.

U-1(b) This Division is divided into three Subsections, Mandatory Appendices, and Nonmandatory Appendices. Subsection A consists of Part UG, covering the general requirements applicable to all pressure vessels. Subsection B covers specific requirements that are applicable to the various methods used in the fabrication of pressure vessels. It consists of Parts UW, UF, and UB dealing with welded, forged, and brazed methods, respectively. Subsection C covers specific requirements applicable to the several classes of materials used in pressure vessel construction. It consists of Parts UCS, UNF, UHA, UCI, UCL, UCD, UHT, ULW, and ULT dealing with carbon and low alloy steels, nonferrous metals, high alloy steels, cast iron, clad and lined material, cast ductile iron, ferritic steels with properties enhanced by heat treatment, layered construction, and low temperature materials, respectively. Section II, Part D also contains tables of maximum allowable stress values for these classes of materials.

The Mandatory Appendices address specific subjects not covered elsewhere in this Division, and their requirements are mandatory when the subject covered is included in construction under this Division. The Nonmandatory Appendices provide information and suggested good practices.

U-1 (c)

U-1(c)(1) The scope of this Division has been established to identify the components and parameters considered in formulating the rules given in this Division. Laws or regulations issued by municipality, state, provincial, federal, or other enforcement or regulatory bodies having jurisdiction at the location of an installation establish the mandatory applicability of the Code rules, in whole or in part, within their jurisdiction. Those laws or regulations may require the use of this Division of the Code for vessels or components not considered to be within its Scope. These laws or regulations should be reviewed to determine size or service limitations of the coverage which may be

different or more restrictive than those given here.

U-1(c)(2) Based on the Committee's consideration, the following classes of vessels are not included in the scope of this Division; however, any pressure vessel which meets all the applicable requirements of this Division may be stamped with the Code U Symbol:

(a) those within the scope of other Sections;

(b) fired process tubular heaters;

(c) pressure containers which are integral parts or components of rotating or reciprocating mechanical devices, such as pumps, compressors, turbines, generators, engines, and hydraulic or pneumatic cylinders where the primary design considerations and/or stresses are derived from the functional requirements of the device;

(d) except as covered in U-l(f), structures whose primary function is the transport of fluids from one location to another within a system of which it is an integral part,

that is, piping systems;

(e) piping components, such as pipe, flanges, bolting, gaskets, valves, expansion joints, fittings, and the pressure containing parts of other components, such as strainers and devices which serve such purposes as mixing, separating, snubbing, distributing, and metering or controlling flow, provided that pressure containing parts of such components are generally recognized as piping components or accessories;

(f) a vessel for containing water[1] under pressure, including those containing air the compression of which serves only as a cushion, when none of the following limitations are exceeded:

[1] The water may contain additives provided the flash point of the aqueous solution at atmospheric pressure is 185°F or higher, The flash point shall be determined by the methods specified in ASTM D 93 or in ASTM D 56, whichever is appropriate.

(1) a design pressure of 300 psi (2 MPa);

(2) a design temperature of 210°F (99°C);

(g) a hot water supply storage tank heated by steam or any other indirect means when none of the following limitations is exceeded:

(1) a heat input of 200,000 Btu/hr (58.6 kW);

(2) a water temperature of 210°F (99°C);

(3) a nominal water containing capacity of 120 gal (450 L);

(h) vessels not exceeding the design pressure, at the top of the vessel, (see 3.2) limitations below, with no limitation on size [see UG-28(f), 9-l(c)]:

(1) vessels having an internal or external pressure not exceeding 15 psi (100 kPa);

(2) combination units having an internal or external pressure in each chamber not exceeding 15 psi (100 kPa) and differential pressure on the common elements not exceeding 15 psi (100 kPa) [see UG-19(a)];

(i) vessels having an inside diameter, width, height, or cross section diagonal not exceeding 6 in. (152 mm), with no limitation on length of vessel or pressure;

(j) pressure vessels for human occupancy.[2]

[2] Requirements for pressure vessels for human occupancy are covered by ASME PVHO-1.

U-1(d) The rules of this Division have been formulated on the basis of design principles and construction practices applicable to vessels designed for pressures not exceeding 3000 psi (20 MPa). For pressures above 3000 psi (20 MPa), deviations from and additions to these rules usually are necessary to meet the requirements of design principles and construction practices for these higher pressures. Only in the event that after having applied these additional design principles and construction practices the vessel still complies with all of the requirements of this Division may it be stamped with the applicable Code symbol.

U-1(e) In relation to the geometry of pressure containing parts, the scope of this Division shall include the following:

U-1(e)(1) where external piping; other pressure vessels including heat exchangers; or mechanical devices, such as pumps, mixers, or compressors, are to be connected to the vessel:

(a) the welding end connection for the first circumferential

joint for welded connections [see UW-13(g)];

(b) the first threaded joint for screwed connections;

(c) the face of the first flange for bolted, flanged connections;

(d) the first sealing surface for proprietary connections or fittings;

U-1(e)(2) where nonpressure parts are welded directly to either the internal or external pressure retaining surface of a pressure vessel, this scope shall include the design, fabrication, testing, and material requirements established for nonpressure part attachments by the applicable paragraphs of this Division;[3]

[3] These requirements for design, fabrication, testing, and material for nonpressure part attachments do not establish the length, size, or shape of the attachment material. Pads and standoffs are permitted and the scope can terminate at the next welded or mechanical joint.

U-1(e)(3) pressure retaining covers for vessel openings, such as manhole and handhole covers;

U-1(e)(4) the first sealing surface for proprietary fittings or components for which rules are not provided by this Division, such as gages, instruments, and nonmetallic components.

U-1(f) The scope of the Division includes provisions for pressure relief devices necessary to satisfy the requirements of UG-125 through UG-137 and Appendix 11.

U-1(g)(1) Unfired steam boilers shall be constructed in accordance with the rules of Section I or this Division [see UG- 125(b) and UW-2(c)].

U-1(g)(2) The following pressure vessels in which steam is generated shall not be considered as unfired steam boilers, and shall be constructed in accordance with the rules of this Division:

U-1(g)(2)(a) vessels known as evaporators or heat exchangers;

U-1(g)(2)(b) vessels in which steam is generated by the use of heat resulting from operation of a processing system containing a number of pressure vessels such as used in the manufacture of chemical and petroleum products;

U-1(g)(2)(c) vessels in which steam is generated but not withdrawn for external use.

U-1(h) Pressure vessels or parts subject to direct firing from the combustion of fuel (solid, liquid, or gaseous), which are not within the scope of Sections I, III, or IV may be constructed in accordance with the rules of this Division [see UW-2(d)].

U-1(i) Gas fired jacketed steam kettles with jacket operating pressures not exceeding 50 psi (345 kPa) may be constructed in accordance with the rules of this Division (see Appendix 19).

U-1(j) Pressure vessels exclusive of those covered in U-l(c), U-l(g), U-l(h), and U-l(i) that are not required by the rules of this Division to be fully radiographed, which are not provided with quick actuating closures (see UG-35), and that do not exceed the following volume and pressure limits may be exempted from inspection by Inspectors, as defined in UG-91, provided that they comply in all other respects with the requirements of this Division:

U-1(j)(l) 5 cu ft (0.14 m^3) in volume and 250 psi (1.7 MPa) design pressure; or

U-1(j)(2) 3 cu ft (0.08 m^3) in volume and 350 psi (2.4 MPa) design pressure;

U-1(j)(3) 1½ cu ft (0.04 m^3) in volume and 600 psi (4.1 MPa) design pressure.

In an assembly of vessels, the limitations in (1) through (3) above apply to each vessel

and not the assembly as a whole. Straight line interpolation for intermediate volumes and design pressures is permitted. Vessels fabricated in accordance with this rule shall be marked with the "UM" Symbol in Fig. UG-116 sketch (b) and with the data required in UG-116. Certificates of Compliance shall satisfy the requirements of UG-120(a).

U-1 (k) The degree of nondestructive examination(s) and the acceptance standards beyond the requirements of this Division shall be a matter of prior agreement between the Manufacturer and user or his designated agent.

GENERAL

U-2 GENERAL

(a) The user or his designated agent[4] shall establish the design requirements for pressure vessels, taking into consideration factors associated with normal operation, such other conditions as startup and shutdown, and abnormal conditions which may become a governing design consideration (see UG-22).

[4] For this Division, the user's designated agent may be either a design agency specifically engaged by the user, the Manufacturer of a system for a specific service that includes a pressure vessel as a part and that is purchased by the user, or an organization that offers pressure vessels for sale or lease for specific services.

(1) the need for corrosion allowances;

(2) the definition of lethal services. For example, see UW-2(a).

(3) the need for postweld heat treatment beyond the requirements of this Division and dependent on service conditions;

(4) for pressure vessels in which steam is generated, or water is heated [see U-l(g) and (h)], the need for piping, valves, instruments, and fittings to perform the functions covered by PG-59 through PG-61 of Section I.

(b) *Responsibilities*[5]

[5] See UG-90(b) and UG-90(c)(l) for summaries of the responsibilities of the Manufacturer and the duties of the Inspector.

(1) The Manufacturer of any vessel or part to be marked with the Code Symbol has the responsibility of complying with all of the applicable requirements of this Division and, through proper certification, of assuring that all work done by others also complies. The vessel or part Manufacturer shall have available for the Inspector's review the applicable design calculations. See 10-5 and 10-15(d).

(2) Some types of work, such as forming, nondestructive examination, and heat treating, may be performed by others (for welding, see UW-26 and UW-31). It is the vessel or part Manufacturer's responsibility to ensure that all work so performed complies with all the applicable requirements of this Division. After ensuring Code compliance, the vessel or part may be Code stamped by the appropriate Code stamp holder after acceptance by the Inspector.

(c) A vessel may be designed and constructed using any combination of the methods of fabrication and the classes of materials covered by this Division provided the rules applying to each method and material are complied with and the vessel is marked as required by UG-116.

(d) When the strength of any part cannot be computed with a satisfactory assurance of safety, the rules provide procedures for establishing its maximum allowable working pressure.

(e) It is the duty of the Inspector to make all of the inspections specified by the rules of this Division, and of monitoring the quality control and the examinations made by the Manufacturer. He shall make such other inspections as in his judgment are necessary to permit him to certify that the vessel has been designed and constructed in accordance with the requirements. The

Inspector has the duty of verifying that the applicable calculations have been made and are on file at Manufacturer's plant at the time the Data Report is signed. Any questions concerning the calculations raised by the Inspector must be resolved. See UG-90(c)(l).

(f) The rules of this Division shall serve as the basis for the Inspector to:

(1) perform the required duties;

(2) authorize the application of the Code Symbol;

(3) sign the Certificate of Shop (or Field Assembly) Inspection.

(g) This Division of Section VIII does not contain rules to cover all details of design and construction. Where complete details are not given, it is intended that the Manufacturer, subject to the acceptance of the Inspector, shall provide details of design and construction which will be as safe as those provided by the rules of this Division.

(h) Field assembly of vessels constructed to this Division may be performed as follows.

(1) The Manufacturer of the vessel completes the vessel in the field, completes the Form U-1 or U-1A Manufacturer's Data Report, and stamps the vessel.

(2) The Manufacturer of parts of a vessel to be completed in the field by some other party stamps these parts in accordance with Code rules and supplies the Form U-2 or U-2A Manufacturer's Partial Data Report to the other party. The other party, who must hold a valid U Certificate of Authorization, makes the final assembly, required NDE, final pressure test; completes the Form U-1 or U-1A Manufacturer's Data Report; and stamps the vessel.

(3) The field portion of the work is completed by a holder of a valid U Certificate of Authorization other than the vessel Manufacturer. The stamp holder performing the field work is required to supply a Form U-2 or U-2A Manufacturer's Partial Data Report covering the portion of the work completed by his organization (including data on the pressure test if conducted by the stamp holder performing the field work) to the Manufacturer responsible for the Code vessel. The vessel Manufacturer applies his U Stamp in the presence of a representative from his Inspection Agency and completes the Form U-1 or U-1A Manufacturer's Data Report with his Inspector.

In all three alternatives, the party completing and signing the Form U-1 or U-1A Manufacturer's Data Report assumes full Code responsibility for the vessel. In all three cases, each Manufacturer's Quality Control System shall describe the controls to assure compliance for each Code stamp holder.

(i) For some design analyses, both a chart or curve and a formula or tabular data are given. Use of the formula or tabular data may result in answers which are slightly different from the values obtained from the chart or curve. However, the difference, if any, is within practical accuracy and either method is acceptable.

U-3 STANDARDS REFERENCED BY THIS DIVISION

(a) Throughout this Division references are made to various standards, such as ANSI standards, which cover pressure-temperature rating, dimensional, or procedural standards for pressure vessel parts. These standards, with the year of the acceptable edition, are listed in Table U-3.

(b) Rules for the use of these standards are stated elsewhere in this Division.

U-4 UNITS OF MEASUREMENT[6]

[6] Guidance for conversion of units from U.S. Customary to SI is found in Nonmandatory Appendix GG.

Either U.S. Customary, SI, or any local customary units may be used to demonstrate compliance with all requirements of this

edition, e.g., materials, design, fabrication, examination, inspection, testing, certification, and overpressure protection.

In general, it is expected that a single system of units shall be used for all aspects of design except where unfeasible or impractical. When components are manufactured at different locations where local customary units are different than those used for the general design, the local units may be used for the design and documentation of that component. Similarly, for proprietary components or those uniquely associated with a system of units different than that used for the general design, the alternate units may be used for the design and documentation of that component.

For any single equation, all variables shall be expressed in a single system of units. When separate equations are provided for U.S. Customary and SI units, those equations must be executed using variables in the units associated with the specific equation. Data expressed in other units shall be converted to U.S. Customary or SI units for use in these equations. The result obtained from execution of these equations may be converted to other units.

Production, measurement and test equipment, drawings, welding procedure specifications, welding procedure and performance qualifications, and other fabrication documents may be in U.S. Customary, SI, or local customary units in accordance with the fabricator's practice. When values shown in calculations and analysis, fabrication documents, or measurement and test equipment are in different units, any conversions necessary for verification of Code compliance and to ensure that dimensional consistency is maintained, shall be in accordance with the following:

(a) Conversion factors shall be accurate to at least four significant figures.

(b) The results of conversions of units shall be expressed to a minimum of three significant figures.

Conversion of units, using the precision specified above shall be performed to assure that dimensional consistency is maintained. Conversion factors between U.S. Customary and SI units may be found in the Nonmandatory Appendix, Guidance for the Use of U.S. Customary and SI Units in the ASME Boiler and Pressure Vessel Code. Whenever local customary units are used the Manufacturer shall provide the source of the conversion factors which shall be subject to verification and acceptance by the Authorized Inspector or Certified Individual.

Material that has been manufactured and certified to either the U.S. Customary or SI material specification (e.g., SA-516M) may be used regardless of the unit system used in design. Standard fittings (e.g., flanges, elbows, etc.) that have been certified to either U.S. Customary units or SI units may be used regardless of the units system used in design.

All entries on a Manufacturer's Data Report and data for Code-required nameplate marking shall be in units consistent with the fabrication drawings for the component using U.S. Customary, SI, or local customary units. It is acceptable to show alternate units parenthetically. Users of this Code are cautioned that the receiving jurisdiction should be contacted to ensure the units are acceptable.

TABLE U-3 YEAR OF ACCEPTABLE EDITION OF REFERENCED STANDARDS IN THIS DIVISION		
Title	**Number**	**Year**
Seat Tightness of Pressure Relief Valves	API Std. 527	1991 (R2002) (1)
Unified Inch Screw Threads (UN and UNR Thread Form)	ASME B1.1	2003
Pipe Threads, General Purpose (Inch)	ANSI/ASME B1.20.1	1983 (R2006) (1)
Cast Iron Pipe Flanges and Flanged Fittings, Classes 25, 125, and 250	ASME B16.1	1998
Pipe Flanges and Flanged Fittings	ASME B16.5	2003 (2)
Factory-Made Wrought Buttwelding Fittings	ASME B16.9	2007
Forged Fittings, Socket-Welding and Threaded	ASME B16.11	2005
Cast Bronze Threaded Fittings, Classes 125 and 250	ASME B16.15	1985 (R2004) (1)
Metallic Gaskets for Pipe Flanges - Ring-Joint, Spiral-Wound, and Jacketed	ASME B16.20	2007
Cast Copper Alloy Pipe Flanges and Flanged Fittings, Class 150, 300, 400, 600, 900, 1500, and 2500	ASME B16.24	2001
Ductile Iron Pipe Flanges and Flanged Fittings, Class 150 and 300	ASME B16.42	1998
Large Diameter Steel Flanges, NPS 26 Through NPS 60	ASME B16.47	1996
Square and Hex Nuts (Inch Series)	ASME B18.2.2	1987 (R1999) (1)
Welded and Seamless Wrought Steel Pipe	ASME B36.10M	2004
Guidelines for Pressure Boundary Bolted Flange Joint Assembly	ASME PCC-1	2000
Repair of Pressure Equipment and Piping	ASME PCC-2	2006
Pressure Relief Devices	ASME PTC 25	2001
Qualifications for Authorized Inspection	ASME QAI-1	2003 (3)
ASNT Central Certification Program	ACCP	Rev 3, November 1997
ASNT Standard for Qualification and Certification of Nondestructive Testing Personnel	ANSI/ASNT CP-189	2006
Recommended Practice for Personnel Qualification and Certification in Nondestructive Testing	SNT-TC-1A	2001
Standard Test Methods for Flash Point by Tag Closed Tester	ASTM D 56	2002a
Standard Test Methods for Flash Point by Pensky-Martens Closed Tester	ASTM D 93	2002a
Pressure Relieving and Depressuring Systems	ANSI/API Std.521	5th Ed., January 2007
Reference Photographs for Magnetic Particle Indications on Ferrous Castings	ASTM E 125	1963 (R1985) (1)
Hardness Conversion Tables for Metals	ASTM E 140	2007
Standard Reference Radiographs for Heavy-Walled (2 to 4½ -in. (51 to 114-mm)) Steel Castings	ASTM E 186	1998
Method for Conducting Drop-Weight Test to Determine Nil-Ductility Transition Temperature of Ferritic Steels	ASTM E 208	2006
Standard Reference Radiographs for Heavy-Walled (4½ to 12-in. (114 to 305-mm)) Steel Castings	ASTM E 280	1998
Standard Reference Radiographs for Steel Castings up to 2 in. (51 mm) in Thickness	ASTM E 446	1998
Marking and Labeling Systems	ANSI/UL-969	1991

TABLE U-3 YEAR OF ACCEPTABLE EDITION OF REFERENCED STANDARDS IN THIS DIVISION		
Title	**Number**	**Year**
Charpy Pendulum Impact Test Part 1: Test Method	ISO 148-1	2006
Charpy Pendulum Impact Test Part 2: Verification of Test Machines	ISO 148-2	1998
Charpy Pendulum Impact Test Part 3: Preparation and Characterization of Charpy V Reference Test Pieces for Verification of Test Machines	ISO 148-3	1998
Metric Standards		
Metric Screw Thread - M Profile	ASME B1.13M	2001
Metric Screw Thread - MJ Profile	ASME B1.21M	1997
Metric Heavy Hex Screws	ASME B18.2.3.3M	1979 (R2001)
Metric Hex Bolts	ASME B18.2.3.5M	1979 (R2001)
Metric Heavy Hex Bolts	ASME B18.2.3.6M	1979 (R2001)
Metric Hex Nuts, Style 1	ASME B18.2.4.1M	2002
Metric Hex Nuts, Style 2	ASME B18.2.4.2M	1979 (R1995)
Metric Heavy Hex Nuts	ASME B18.2.4.6M	1979 (R2003)
NOTES: (1) R - Reaffirmed. (2) See UG-11 (a) (2). (3) See UG-91 and UG-117 (f).		

PRESSURE RELIEF DEVICES

UG-125 GENERAL

(a) All pressure vessels within the Scope of this Division, irrespective of size or pressure, shall be provided with pressure relief devices in accordance with the requirements of UG-125 through UG- 137.

(1) It is the responsibility of the user to ensure that the required pressure relief devices are properly installed prior to initial operation.

(2) It is the responsibility of the user or his/her designated agent to size and select the pressure relief device(s) based on its intended service. Intended service considerations shall include, but not necessarily be limited to, the following:

(a) normal operating and upset conditions

(b) fluids

(c) fluid phases

(3) These pressure relief devices need not be supplied by the vessel Manufacturer.

(4) Unless otherwise defined in this Division, the definitions relating to pressure relief devices in Section 2 of ASME PTC 25 shall apply.

(b) An unfired steam boiler, as defined in U-1(g), shall be equipped with pressure relief devices required by Section I insofar as they are applicable to the service of the particular installation.

(c) All pressure vessels other than unfired steam boilers shall be protected by a pressure relief device that shall prevent the pressure from rising more than 10% or 3 psi (20 kPa), whichever is greater, above the maximum allowable working pressure except as permitted in (1) and (2) below. (See UG-134 for pressure settings.)

(1) When multiple pressure relief devices are provided and set in accordance with UG-134(a), they shall prevent the pressure from rising more than 16% or 4 psi (30 kPa), whichever is greater, above the maximum allowable working pressure.

(2) When a pressure vessel can be exposed to fire or other unexpected sources of external heat, the pressure relief device(s) shall be capable of preventing the pressure from rising more than 21% above the

maximum allowable working pressure. Supplemental pressure relief devices shall be installed to protect against this source of excessive pressure if the pressure relief devices used to satisfy the capacity requirements of UG-125(c) and UG-125(c)(1) have insufficient capacity to provide the required protection. See Nonmandatory Appendix M, para. M-13 for cases where the metal temperature due to fire or other sources of external heat can cause vessel failure prior to reaching the MAWP.

(3) Pressure relief devices, intended primarily for protection against exposure of a pressure vessel to fire or other unexpected sources of external heat installed on vessels having no permanent supply connection and used for storage at ambient temperatures of nonrefrigerated liquefied compressed gases[42] are excluded from the requirements of (c)(1) and (c)(2) above, provided:

[42] For the purpose of these rules, gases are considered to be substances having a vapor pressure greater than 40 psia (300 kPa absolute) at 100°F (40°C).

(a) the pressure relief devices are capable of preventing the pressure from rising more than 20% above the maximum allowable working pressure of the vessels;

(b) the set pressure marked on these devices shall not exceed the maximum allowable working pressure of the vessels;

(c) the vessels have sufficient ullage to avoid a liquid full condition;

(d) the maximum allowable working pressure of the vessels on which these pressure relief devices are installed is greater than the vapor pressure of the stored liquefied compressed gas at the maximum anticipated temperature[43] that the gas will reach under atmospheric conditions; and

[43] Normally this temperature should not be less than 115°F (45°C).

(e) pressure relief valves used to satisfy these provisions also comply with the requirements of UG-129(a)(5), UG-131(c)(2), and UG-134(d)(2).

(d) Pressure relief devices shall be constructed, located, and installed so that they are readily accessible for inspection, replacement, and repair and so that they cannot be readily rendered inoperative (see Appendix M).

(e) Pressure relief valves or nonreclosing pressure relief devices[44] may be used to protect against overpressure. Nonreclosing pressure relief devices may be used either alone or, if applicable, in combination with pressure relief valves on vessels.

[44] A *pressure relief valve* is a pressure relief device which is designed to reclose and prevent the further flow of fluid after normal conditions have been restored. A *nonreclosing pressure relief device* is a pressure relief device designed to remain open after operation.

NOTE: Use of nonreclosing pressure relief devices of some types may be advisable on vessels containing substances that may render a pressure relief valve inoperative, where a loss of valuable material by leakage should be avoided, or where contamination of the atmosphere by leakage of noxious fluids must be avoided. The use of rupture disk devices may also be advisable when very rapid rates of pressure rise may be encountered.

(f) Vessels that are to operate completely filled with liquid shall be equipped with pressure relief devices designed for liquid service, unless otherwise protected against overpressure.

(g) The pressure relief devices required in (a) above need not be installed directly on a pressure vessel when either of the following conditions apply:

(1) the source of pressure is external to the vessel and is under such positive control that the pressure in the vessel cannot exceed the maximum allowable working pressure at the operating temperature except as permitted in (c) above (see UG-98), or under the conditions set forth in Appendix M.

(2) there are no intervening stop valves between the vessel and the pressure relief device or devices except as permitted under UG-135(d).

NOTE: Pressure reducing valves and similar mechanical or electrical control instruments, except for pilot operated pressure relief valves as permitted in UG-126(b), are not considered as sufficiently positive in action to prevent excess pressures from being developed.

(h) Pressure relief valves for steam service shall meet the requirements of UG- 131(b).

UG-126 PRESSURE RELIEF VALVES[45]

[45] A *safety valve* is a pressure relief valve actuated by inlet static pressure and characterized by rapid opening or pop action. A *relief valve* is a pressure relief valve actuated by inlet static pressure which opens in proportion to the increase in pressure over the opening pressure. A *safety relief valve* is a pressure relief valve characterized by rapid opening or pop action, or by opening in proportion to the increase in pressure over the opening pressure, depending on application. A *pilot operated pressure relief valve* is a pressure relief valve in which the major relieving device is combined with and is controlled by a self-actuated auxiliary pressure relief valve.

(a) Safety, safety relief, and relief valves shall be of the direct spring loaded type.

(b) Pilot operated pressure relief valves may be used, provided that the pilot is self-actuated and the main valve will open automatically at not over the set pressure and will discharge its full rated capacity if some essential part of the pilot should fail.

(c) The spring in a pressure relief valve shall not be set for any pressure more than 5% above or below that for which the valve is marked, unless the setting is within the spring design range established by the valve Manufacturer or is determined to be acceptable to the Manufacturer. The initial adjustment shall be performed by the Manufacturer, his authorized representative, or an Assembler, and a valve data tag shall be provided that identifies the set pressure capacity and date. The valve shall be sealed with a seal identifying the Manufacturer, his authorized representative, or the Assembler performing the adjustment.

(d) The set pressure tolerances, plus or minus, of pressure relief valves shall not exceed 2 psi (15 kPa) for pressures up to and including 70 psi (500 kPa) and 3% for pressures above 70 psi (500 kPa).

UG-127 NONRECLOSING PRESSURE RELIEF DEVICES

(a) *Rupture Disk Devices*[46]

[46] *A rupture disk device* is a nonreclosing pressure relief device actuated by inlet static pressure and designed to function by the bursting of a pressure containing disk. A *rupture disk* is the pressure containing and pressure sensitive element of a rupture disk device. Rupture disks may be designed in several configurations, such as plain flat, prebulged, or reverse buckling. A *rupture disk holder* is the structure that encloses and clamps the rupture disk in position.

(1) *General.* Every rupture disk shall have a marked burst pressure established by rules of UG- 137(d)(3) within a manufacturing design range[47] at a specified disk temperature[48] and shall be marked with a lot[49] number. The burst pressure tolerance at the specified disk temperature shall not exceed ±2 psi (±15 kPa) for marked burst pressure up to and including 40 psi (300 kPa) and ±5% for marked burst pressure above 40 psi (300 kPa).

[47] The *manufacturing design range* is a range of pressure within which the marked burst pressure must fall to be acceptable for a particular requirement as agreed upon between the rupture disk Manufacturer and the user or his agent. The manufacturing design range must be evaluated in conjunction with the specified burst pressure to ensure that the marked burst pressure of the rupture disk will always be within applicable limits of UG-134. Users are cautioned that certain types of rupture disks have manufacturing ranges that can result in a marked burst pressure greater than the specified burst pressure.

[48] The specified disk temperature supplied to the rupture disk Manufacturer shall be the temperature of the disk when the disk is expected to burst.

[49] A *lot of rupture disks* is those disks manufactured of a material at the same time, of the same size, thickness, type, heat, and manufacturing process including heat treatment.

(2) *Relieving Capacity.* The rated flow capacity of a pressure relief system which uses a rupture disk device as the sole relief device shall be determined by a value calculated under the requirements of (a) using a coefficient of discharge or (b) using flow resistances below.

(a) When the rupture disk device discharges directly to atmosphere and

(1) is installed within eight pipe diameters from the vessel nozzle entry; and

(2) with a length of discharge pipe not greater than five pipe diameters from the rupture disk device; and

(3) the nominal diameters of the inlet and discharge piping are equal to or greater than the stamped NPS designator of the device, the calculated relieving capacity of a pressure relief system shall not exceed a value based on the applicable theoretical flow equation [see UG-131(e)(2) and Appendix 11] for the various media multiplied by a coefficient of discharge K equal to 0.62. The area A in the theoretical flow equation shall be the minimum net flow area[50] as specified by the rupture disk device Manufacturer.

[50] The *minimum net flow area* is the calculated net area after a complete burst of the disk with appropriate allowance for any structural members which may reduce the net flow area through the rupture disk device. The net flow area for sizing purposes shall not exceed the nominal pipe size area of the rupture disk device.

(b) The calculated capacity of any pressure relief system may be determined by analyzing the total system resistance to flow. This analysis shall take into consideration the flow resistance of the rupture disk device, piping and piping components including the exit nozzle on the vessels, elbows, tees, reducers, and valves. The calculation shall be made using accepted engineering practices for determining fluid flow through piping systems. This calculated relieving capacity shall be multiplied by a factor of 0.90 or less to allow for uncertainties inherent with this method. The certified flow resistance[51] K_R for the rupture disk device, expressed as the velocity head loss, shall be determined in accordance with UG-13 1(k) through (r).

[51] The *certified flow resistance* K_R is a dimensionless factor used to calculate the velocity head loss that results from the presence of a rupture disk device in a pressure relief system.

(3) *Application of Rupture Disks*

(a) A rupture disk device may be used as the sole pressure relieving device on a vessel.

NOTE: When rupture disk devices are used, it is recommended that the design pressure of the vessel be sufficiently above the intended operating pressure to provide sufficient margin between operating pressure and rupture disk bursting pressure to prevent premature failure of the rupture disk due to fatigue or creep.

Application of rupture disk devices to liquid service should be carefully evaluated to assure that the design of the rupture disk device and the dynamic energy of the system on which it is installed will result in sufficient opening of the rupture disk.

(b) A rupture disk device may be installed between a pressure relief valves[52] and the vessel provided:

[52] Use of a rupture disk device in combination with a pressure relief valve shall be carefully evaluated to ensure that the media being handled and the valve operational characteristics will result in opening of the valve coincident with the bursting of the rupture disk.

(1) the combination of the pressure relief valve and the rupture disk device is ample in capacity to meet the requirements of UG-133(a) and (b);

(2) the marked capacity of a pressure relief valve (nozzle type) when installed with a rupture disk device between the inlet of the valve and the vessel shall be multiplied by a factor of 0.90 of the rated relieving capacity of the valve alone, or alternatively, the capacity of such a combination shall be established in accordance with (3) below;

(3) the capacity of the combination of the rupture disk device and the pressure relief valve may be established in accordance with the appropriate paragraphs of UG-132;

(4) the space between a rupture disk device and a pressure relief valve shall be provided with a pressure gage, a try cock, free vent, or suitable telltale indicator. This

arrangement permits detection of disk rupture or leakage.[53]

[53] Users are warned that a rupture disk will not burst at its design pressure if back pressure builds up in the space between the disk and the pressure relief valve which will occur should leakage develop in the rupture disk due to corrosion or other cause.

(5) the opening[50] provided through the rupture disk, after burst, is sufficient to permit a flow equal to the capacity of the valve [(2) and (3) above], and there is no chance of interference with proper functioning of the valve; but in no case shall this area be less than the area of the inlet of the valve unless the capacity and functioning of the specific combination of rupture disk device and pressure relief valve have been established by test in accordance with UG-132.

[50] The *minimum net flow area* is the calculated net area after a complete burst of the disk with appropriate allowance for any structural members which may reduce the net flow area through the rupture disk device. The net flow area for sizing purposes shall not exceed the nominal pipe size area of the rupture disk device.

(c) A rupture disk device may be installed on the outlet side[54] of a pressure relief valve which is opened by direct action of the pressure in the vessel provided:

[54] This use of a rupture disk device in series with the pressure relief valve is permitted to minimize the loss by leakage through the valve of valuable or of noxious or otherwise hazardous materials, and where a rupture disk alone or disk located on the inlet side of the valve is impracticable, or to prevent corrosive gases from a common discharge line from reaching the valve internals.

(1) the pressure relief valve will not fail to open at its proper pressure setting regardless of any back pressure that can accumulate between the pressure relief valve disk and the rupture disk. The space between the pressure relief valve disk and the rupture disk shall be vented or drained to prevent accumulation of pressure, or suitable means shall be provided to ensure that an accumulation of pressure does not affect the proper operation of the pressure relief valve.[55]

[55] Users are warned that many types of pressure relief valves will not open at the set pressure if pressure builds up in the space between the pressure relief valve disk and the rupture disk device. A specially designed pressure relief valve such as a diaphragm valve, pilot operated valve, or a valve equipped with a balancing bellows above the disk may be required.

(2) the pressure relief valve is ample in capacity to meet the requirements of UG-125(c);

(3) the marked burst pressure of the rupture disk at the specified disk temperature plus any pressure in the outlet piping shall not exceed the design pressure of the outlet portion of the pressure relief valve and any pipe or fitting between the valve and the rupture disk device. However, in no case shall the marked burst pressure of the rupture disk at the specified disk temperature plus any pressure in the outlet piping exceed the maximum allowable working pressure of the vessel or the set pressure of the pressure relief valve.

(4) the opening provided through the rupture disk device after breakage is sufficient to permit a flow equal to the rated capacity of the attached pressure relief valve without exceeding the allowable overpressure;

(5) any piping beyond the rupture disk cannot be obstructed by the rupture disk or fragment;

(6) the system is designed to consider the adverse effects of any leakage through the pressure relief valve or through the outlet side rupture disk device, to ensure system performance and reliability.[56]

[56] Some adverse effects resulting from leakage may include obstructing the flow path, corrosion of pressure relief valve components, and undesirable bursts of the outlet side rupture disk.

(7) the bonnet of a balancing bellows or diaphragm type pressure relief valve shall be vented to prevent accumulation of pressure in the bonnet.

(b) *Breaking Pin Device*[57]

[57] A *breaking pin device* is *a* nonreclosing pressure relief device actuated by inlet static pressure and designed to function by the breakage of a load-carrying section of a pin which supports a pressure containing member. A *breaking pin* is the load-carrying element of a breaking pin device. A *breaking pin housing* is the structure which encloses the breaking pin mechanism. The material of the housing shall be listed in Section II and be permitted for use in this Division.

(1) Breaking pin devices shall not be used as single devices but only in combination between the pressure relief valve and the vessel.

(2) The space between a breaking pin device and a pressure relief valve shall be provided with a pressure gage, a try cock, a free vent, or suitable telltale indicator. This arrangement permits detection of breaking pin device operation or leakage.

(3) Each breaking pin device shall have a rated pressure and temperature at which the pin will break. The breaking pin shall be identified to a lot number and shall be guaranteed by the Manufacturer to break when the rated pressure, within the following tolerances, is applied to the device:

Rated Pressure, psi (kPa)		Tolerance, Plus or Minus, psi (kPa)
Min.	Max.	
30 (200)	150 (1 000)	5 (35)
150 (1 000)	275 (1 900)	10 (70)
275 (1 900)	375 (2 600)	15 (100)

(4) The rated pressure of the breaking pin plus the tolerance in psi shall not exceed 105% of the maximum allowable working pressure of the vessel to which it is applied.

(5) The rated pressure at the specified temperature[58] shall be verified by breaking two or more sample breaking pins from each lot of the same material and the same size as those to be used. The lot size shall not exceed 25. The test shall be made in a device of the same form and pressure dimensions as that in which the breaking pin is to be used.

[58] The specified temperature supplied to the breaking pin manufacturer shall be the temperature of the breaking pin when an emergency condition exists and the pin is expected to break.

(c) *Spring Loaded Nonreclosing Pressure Relief Device*

(1) A spring loaded nonreclosing pressure relief device, pressure actuated by means which permit the spring loaded portion of the device to open at the specified set pressure and remain open until manually reset, may be used provided the design of the spring loaded nonreclosing device is such that if the actuating means fail, the device will achieve full opening at or below its set pressure. Such a device may not be used in combination with any other pressure relief device. The tolerance on opening point shall not exceed ±5%.

(2) The calculated capacity rating of a spring loaded nonreclosing pressure relief device shall not exceed a value based on the applicable theoretical formula (see UG-131) for the various media, multiplied by: K = coefficient = 0.62.

The area A (square inches) in the theoretical formula shall be the flow area through the minimum opening of the spring loaded nonreclosing pressure relief device.

(3) In lieu of the method of capacity rating in (2) above, a Manufacturer may have the capacity of a spring loaded nonreclosing pressure relief device design certified in general accordance with the procedures of UG-131, as applicable.

UG-128 LIQUID PRESSURE RELIEF VALVES

Any liquid pressure relief valve used shall be at least NPS ½ (DN 15).

UG-129 MARKING

(a) *Safety, Safety Relief, Relief, Liquid Pressure Relief, and Pilot Operated Pressure Relief Valves.* Each safety, safety relief, relief, liquid pressure relief, and pilot operated pressure relief valve NPS ½ (DN 15) and larger shall be plainly marked by the Manufacturer or Assembler with the required data in such a way that the marking will not be obliterated in service. The marking may be placed on the valve or on a plate or plates that satisfy the requirements of UG-119:

(1) the name, or an acceptable abbreviation, of the Manufacturer and the Assembler;

(2) Manufacturer's design or type number;

(3) NPS size (DN) _____ (the nominal pipe size of the valve inlet);

(4) set pressure _____ psi (kPa), and, if applicable per UG-136(d)(4), cold differential test pressure _____ psi (kPa);

(5) certified capacity (as applicable):

(a) lb/hr (kg/hr) of saturated steam at an overpressure of 10% or 3 psi (20 kPa), whichever is greater for valves certified on steam complying with UG-131 (b); or

(b) gal/min of water at 70°F (20°C) at an overpressure of 10% or 3 psi (20 kPa), whichever is greater for valves certified on water; or

(c) SCFM [standard cubic feet per minute at 60°F and 14.7 psia] (M^3/min, cubic meters per minute at 20°C and 101 kPa), or lb/min (kg/min), of air at an overpressure of 10% or 3 psi (kPa), whichever is greater. Valves that are capacity certified in accordance with UG-131 (c) (2) shall be marked "at 20% overpressure."

(d) In addition to one of the fluids specified above, the Manufacturer may indicate the capacity in other fluids (see Appendix 11).

(6) year built, or alternatively, a coding may be marked on the valve such that the valve Manufacturer or Assembler can identify the year the valve was assembled or tested;

(7) ASME Symbol as shown in Fig. UG-129.1. The pilot of a pilot operated pressure relief valve shall be plainly marked by the Manufacturer or Assembler showing the name of the Manufacturer, the Manufacturer's design or type number, the set pressure in pounds per square inch (kPa), and the year built, or alternatively, a coding that the Manufacturer can use to identify the year built.

On valves smaller than NPS ½ (DN 15), the markings may be made on a metal tag attached by wire or adhesive meeting the requirements of UG-119 or other means suitable for the service conditions.

(8) Restricted lift _____ in. (mm) (For restricted lift valves only)

(b) Safety and safety relief valves certified for a steam discharging capacity under the provisions of Section I and bearing the official Code Symbol Stamp of Section I for safety valves may be used on pressure vessels. The rated capacity in terms of other fluids shall be determined by the method of conversion given in Appendix 11. [See UG-13l(h).]

(c) *Pressure Relief Valves in Combination With Rupture Disk Devices*. Pressure relief valves in combination with rupture disk devices shall be marked with the capacity as established in accordance with UG-127(a)(3)(b)(2) (using 0.90 factor) or the combination capacity factor established by test in accordance with UG-132(a) or (b), in addition to the marking of UG-129(a) and (f) below. The marking may be placed on the pressure relief valve or rupture disk device or on a plate or plates that satisfy the requirements of UG-119. The marking shall include the following:

(1) name of Manufacturer of valve;

(2) design or type number of valve;

(3) name of Manufacturer of rupture disk device;

(4) design or type number of rupture disk device;

(5) capacity or combination capacity factor;

(6) name of organization responsible for this marking. This shall be either the vessel user, vessel Manufacturer, rupture disk Manufacturer, or pressure relief valve Manufacturer.

(d) *Pressure Relief Valves in Combination With Breaking Pin Devices.* Pressure relief valves in combination with pin devices shall be marked with the capacity as established in accordance with UG-127 (b) (3) (b) (2) (using 0.90 factor) or the combination capacity factor established by test in accordance with UG-132 (a) or (b), in addition to the marking of UG-129 (a) and (f) below. The marking may be placed on the pressure relief valve or pin device or on a plate or plates that satisfy the requirements of UG-119. The marking shall include the following:

(1) name of Manufacturer of valve.

(2) design or type number of valve.

(3) name of Manufacturer of pin device.

(4) design or type number of pin device.

(5) capacity or combination capacity factor.

(6) name of organization responsible for this marking.

This shall be either the vessel user, vessel Manufacturer, pin device Manufacturer, or pressure relief valve Manufacturer.

FIG. UG-129.1 OFFICIAL SYMBOL FOR STAMP TO DENOTE THE AMERICAN SOCIETY OF MECHANICAL ENGINEERS' STANDARD FOR PRESSURE RELIEF VALVES

FIG. UG-129.2 OFFICIAL SYMBOL FOR STAMP TO DENOTE THE AMERICAN SOCIETY OF MECHANICAL ENGINEERS' STANDARD FOR RUPTURE DISK DEVICES

(e) *Rupture Disk Devices.* Every rupture disk shall be plainly marked by the Manufacturer in such a way that the marking will not be obliterated in service. The rupture disk marking may be placed on the flange of the disk or on a metal tab that satisfies the requirements of UG-119. The marking shall include the following:

(1) the name or identifying trademark of the Manufacturer;

(2) Manufacturer's design or type number;

(3) lot number;

(4) disk material;

(5) size _____ [NPS (DN) of rupture disk holder];

(6) marked burst pressure _____ psi (kPa);

(7) specified disk temperature _____ °F (°C);

(8) minimum net flow area _____sq in. (sq mm);

(9) certified flow resistance (one or more as applicable);

(a) K_{RG} _____ for rupture disk certified on air or gases;

(b) K_{RL} _____ for rupture disk certified on liquid;

(c) K_{RGL} _____ for rupture disk certified on air or gases, and liquid;

(10) ASME symbol as shown in Fig. UG-129.2;

(11) year built, or alternatively, a coding may be marked on the rupture disk such that the rupture disk device Manufacturer can identify the year the rupture disk device was assembled and tested.

Items (1), (2), (5), (10), and (11) above and flow direction shall also be marked on the rupture disk holder.

(f) Pin Devices and Pin Actuated Pilot Operated Pressure Relief Devices. Pin devices shall be plainly marked by the Manufacturer with the required data in such a way that the marking will not be obliterated in service. The marking may be placed on the device housing or on a plate or plates that satisfies the requirements of UG-119. The marking shall include the following:

(1) the name, or an acceptable abbreviation of the Manufacturer

(2) Manufacturer's design or type number

(3) NPS (DN) size (the nominal pipe size of the device inlet)

(4) set pressure psi (kPa)

(5) flow direction

(6) pin to pin device identifier

(7) for capacity certified devices

(a) lb/hr of saturated steam at an overpressure 10% or 3 psi (20 kPa), whichever is greater for devices certified on steam complying with UG-131(b), or

(b) gal/min of water at 70°F (20°C) at an overpressure of 10% or 3 psi (20 kPa), whichever is greater for devices certified on water, or

(c) SCFM [standard cubic feet per minute at 60°F and 14.7 psia (20°C and 101 kPa)], or lb/min, of air at an overpressure of 10% or 3 psi, whichever is greater. Devices that are capacity certified in accordance with UG-131 (c) (2) shall be marked "at 20% overpressure."

(d) In addition to one of the fluids specified above, the Manufacturer may indicate the capacity in other fluids (see Appendix 11).

(8) for flow resistance certified devices:

(a) minimum net flow area _____ in^2 (mm^2)

(b) certified flow resistance (one or more as applicable)

(1) K_{RG} _____ for pin devices certified on air or gases

(2) K_{RL} _____ for pin devices certified on liquid

(3) K_{RGL} _____ for pin devices certified on air or gases, and liquid

(9) ASME symbol as shown in Fig. UG-129.2

(10) year built, or alternatively, a coding may be marked on the device such that the device Manufacturer can identify the year the device was tested

(11) The pin shall be marked according to one of the following methods:

(a) for pin devices using a replaceable pin to control set pressure, the pin shall be marked with its lot number, pin temperature °F (°C) and the information required by (f) (l), (f) (4), (f) (6), (f) (10), or

NOTE: When the pin size or configuration does not permit the use of an attached metal tag, a metal tag may be attached using a nonmetallic connector with an adhesive that complies with Appendix 18 of this Division.

(b) for pin devices that are single use and permanently assembled, the marking requirements of (f) (8) (a), (f) (8) (b), and (f) (11) (a) shall be applied to the device, or

(c) for pin devices that have a replaceable pin within the sealed body per UG-138, the pin shall be marked with its lot number.

(g) *Spring Loaded Nonreclosing Pressure Relief Devices.* Spring loaded nomeclosing pressure relief devices shall be marked in accordance with (a) above except that the Code Symbol Stamp is to be applied only when the capacity has been established and certified in accordance with UG-127 (c) (3) and all other requirements of UG-130 have been met.

(h) For units other than those included above, see U-4.

UG-130 CODE SYMBOL STAMP

Each pressure relief device[59] to which the Code Symbol (see Figs. UG-129.1 and UG-

129.2) will be applied shall have been fabricated or assembled by a Manufacturer or Assembler holding a valid Certificate of Authorization (UG-117) and capacity certified in accordance with the requirements of this Division. A Certified Individual (CI) shall provide oversight as required by UG-117(a). Each use of the Code Symbol shall also be documented on a Certificate of Conformance Form UV-1 or UD-1, as appropriate.

[59] Vacuum relief devices are not covered by Code Symbol Stamp requirements.

UG-133 DETERMINATION OF PRESSURE RELIEVING REQUIREMENTS

(a) Except as permitted in (b) below, the aggregate capacity of the pressure relief devices connected to any vessel or system of vessels for the release of a liquid, air, steam, or other vapor shall be sufficient to carry off the maximum quantity that can be generated or supplied to the attached equipment without permitting a rise in pressure within the vessel of more than 16% above the maximum allowable working pressure when the pressure relief devices are blowing.

(b) Pressure relief devices as permitted in UG-125(c)(2), as protection against excessive pressure caused by exposure to fire or other sources of external heat, shall have a relieving capacity sufficient to prevent the pressure from rising more than 21% above the maximum allowable working pressure of the vessel when all pressure relief devices are blowing.

(c) Vessels connected together by a system of adequate piping not containing valves which can isolate any vessel, and those containing valves in compliance with Appendix M, M-5, may be considered as one unit in figuring the required relieving capacity of pressure relief devices to be furnished.

(d) Heat exchangers and similar vessels shall be protected with a pressure relief device of sufficient capacity to avoid overpressure in case of an internal failure.

(e) The official rated capacity, or the certified flow resistance and minimum net flow area, of a pressure relief device shall be that which is stamped on the device and guaranteed by the Manufacturer.

(f) The rated pressure relieving capacity of a pressure relief valve for other than steam or air shall be determined by the method of conversion given in Appendix 11.

(g) The relieving capacity of a pressure relief device for compressible fluids may be prorated at any relieving pressure greater than 1.10*p*, as permitted under UG-125, by applying a multiplier to the official relieving capacity as follows:

(U.S. Customary Units)

$$\frac{P + 14.7}{1.10p + 14.7}$$

(SI Units)

$$\frac{P + 101}{1.10p + 101}$$

where

P = relieving pressure, psig(kPa gage)

p = set pressure, psig(kPa gage)

For steam pressures above 1,500 psig (10 MPa gage), the above multiplier is not applicable. For steam valves with relieving pressures greater than 1,500 psig (10 MPa gage) and less than or equal to 3,200 psig (22.1 MPa gage), the capacity at relieving pressures greater than 1.10*p* shall be determined using the equation for steam and the correction factor for high pressure steam in UG-131 (e) (2) with the permitted absolute relieving pressure and the coefficient *K* for that valve design.

(h) When sizing and selecting valves, the restricted lift nameplate capacity shall be determined by multiplying the capacity at full rated lift as defined in UG-131 (e) (3) by the ratio of the restricted lift to the full rated lift.

UG-134 PRESSURE SETTINGS AND PERFORMANCE REQUIREMENTS

(a) When a single pressure relief device is used, the set pressure[61] marked on the device shall not exceed the maximum allowable working pressure of the vessel. When the required capacity is provided in more than one pressure relief device, only one pressure relief device need be set at or below the maximum allowable working pressure, and the additional pressure relief devices may be set to open at higher pressures but in no case at a pressure higher than 105% of the maximum allowable working pressure, except as provided in (b) below.

[61] The *set pressure* is the value of increasing inlet static pressure at which a pressure relief device displays one of the operational characteristics as defined by opening pressure, popping pressure, start-to-leak pressure, burst pressure, or breaking pressure. (The applicable operating characteristic for a specific device design is specified by the device Manufacturer.)

(b) For pressure relief devices permitted in UG-125(c)(2) as protection against excessive pressure caused by exposure to fire or other sources of external heat, the device marked set pressure shall not exceed 110% of the maximum allowable working pressure of the vessel. If such a pressure relief device is used to meet the requirements of both UG-125(c) and UG-125(c)(2), the device marked set pressure shall not be over the maximum allowable working pressure.

(c) The pressure relief device set pressure shall include the effects of static head and constant back pressure.

(d) (l) The set pressure tolerance for pressure relief valves shall not exceed ±2 psi (15 kPa) for pressures up to and including 70 psi (500 kPa) and ±3% for pressures above 70 psi (500 kPa), except as covered in (d)(2) below.

(2) The set pressure tolerance of pressure relief valves which comply with UG-125(c)(3) shall be within -0%, +10%.

(e) The burst pressure tolerance for rupture disk devices at the specified disk temperature shall not exceed ±2 psi (15 kPa) of marked burst pressure up to 40 psi (300 kPa) and ±5% of marked burst pressure 40 psi (300 kPa) and over.

(f) Pressure relief valves shall be designed and constructed such that when installed per UG-135, the valves will operate without chattering and shall not flutter at the flow-rated pressure in a way that either would interfere with the measurement of capacity or would result in damage.

UG-135 INSTALLATION

(a) Pressure relief devices intended for relief of compressible fluids shall be connected to the vessel in the vapor space above any contained liquid or to piping connected to the vapor space in the vessel which is to be protected. Pressure relief devices intended for relief of liquids shall be connected below the liquid level. Alternative connection locations are permitted, depending on the potential vessel overpressure scenarios and the type of relief device selected, provided the requirements of UG-125(a)(2) and UG-125(c) are met.

(b)(1) The opening through all pipe, fittings and nonreclosing pressure relief devices (if installed) between a pressure vessel and its pressure relief valve shall have at least the area of the pressure relief valve inlet. The characteristic of this upstream system shall be such that the pressure drop will not reduce the relieving capacity below that required or adversely affect the proper operation of the pressure relief valve.

(2) The opening in the vessel wall shall be designed to provide unobstructed flow between the vessel and its pressure relief device (see Appendix M).[62]

[62] Users are warned that the proper operation of various rupture disk devices depends upon following the Manufacturer's installation instructions closely with regard to the flow direction marked on the device. Some device designs will burst at pressures much greater than their

marked burst pressure when installed with the process pressure on the vent side of the device.

(c) When two or more required pressure relief devices are placed on one connection, the inlet internal cross-sectional area of this connection shall be either sized to avoid restricting flow to the pressure relief devices or made at least equal to the combined inlet areas of the safety devices connected to it. The flow characteristics of the upstream system shall satisfy the requirements of (b) above. (See Appendix M.)

(d) There shall be no intervening stop valves between the vessel and its pressure relief device or devices, or between the pressure relief device or devices and the point

of discharge, except:

(1) when these stop valves are so constructed or positively controlled that the closing of the maximum number a of block valves possible at one time will not reduce the pressure relieving capacity provided by the unaffected pressure relief devices below the required relieving capacity; or

(2) under conditions set forth in Appendix M.

(e) The pressure relief devices on all vessels shall be so installed that their proper functioning will not be hindered by the nature of the vessel’s contents.

(f) Discharge lines from pressure relief devices shall be designed to facilitate drainage or shall be fitted with drains to prevent liquid from lodging in the discharge side of the pressure relief device, and such lines shall lead to a safe place of discharge. The size of the discharge lines shall be such that any pressure that may exist or develop will not reduce the relieving capacity of the pressure relief devices below that required to properly protect the vessel, or adversely affect the proper operation of the pressure relief devices. [See UG- 136(a)(8) and Appendix M.]

EXCERPTS FROM: POWER PIPING CODE
ANSI/ASME B31.1
2010 EDITION
FOREWARD

The general *philosophy* underlying this Power Piping Code is to parallel those provisions of Section I, Power Boilers, of the ASME Boiler and Pressure Vessel Code, as they can be applied to power piping systems. The Allowable Stress Values for power piping are generally consistent with those assigned for power boilers. This Code is more conservative than some other piping codes, reflecting the need for long service life and maximum reliability in power plant installations.

The Power Piping Code as currently written does not differentiate between the design, fabrication, and erection requirements for *critical and noncritical piping systems,* except for certain stress calculations and mandatory nondestructive tests of welds for heavy wall, high temperature applications. The *problem involved* is to try to reach agreement on how to evaluate criticality, and to avoid the inference that noncritical systems do not require competence in design, fabrication, and erection. Some day such levels of quality may be definable, so that the need for the many different piping codes will be overcome.

There are many instances where the Code serves to *warn a designer,* fabricator, or erector against possible pitfalls; but the Code is *not a handbook,* and cannot substitute for education, experience, and sound engineering judgment.

Nonmandatory Appendices are included in the Code. Each contains information on a specific subject, and is maintained current with the Code. Although written in mandatory language, these Appendices are offered for application at the user's discretion.

The Code *never intentionally puts a ceiling limit on conservatism.* A designer is free to specify more rigid requirements as he feels they may be justified. *Conversely, a designer who is capable* of a more rigorous analysis than is specified in the Code may justify a less conservative design, and still satisfy the basic intent of the Code.

The Power Piping Committee strives to keep abreast of the current technological improvements in new materials, fabrication practices, and testing techniques; and endeavors to keep the Code updated to permit the use of acceptable new developments.

INTRODUCTION

The ASME B31 Code for Pressure Piping consists of a number of individually published Sections, each an American National Standard, under the direction of ASME Committee B31, Code for Pressure Piping.

Rules for each Section have been developed considering the need for application of specific requirements for various types of pressure piping. Applications considered for each Code Section include:

B31.1 Power Piping: piping typically found in electric power generating stations, in industrial and institutional plants, geothermal heating systems, and central and district heating and cooling systems;

B31.3 Process Piping: piping typically found in petroleum refineries, chemical, pharmaceutical, textile, paper, semiconductor, and cryogenic plants, and related processing plants and terminals;

B31.4 Pipeline Transportation Systems for Liquid Hydrocarbons and Other Liquids: piping transporting products which are predominately liquid between plants and terminals and within terminals, pumping, regulating, and metering stations;

B31.5 Refrigeration Piping: piping for refrigerants and secondary coolants;

B31.8 Gas Transportation and Distribution Piping Systems: piping transporting products which are predominately gas between sources and terminals, including compressor, regulating, and metering stations; and gas gathering pipelines;

B31.9 Building Services Piping: piping typically found in industrial, institutional, commercial, and public buildings, and in multi-unit residences, which does not require the range of sizes, pressures, and temperatures covered in B31.1;

B31.11 Slurry Transportation Piping Systems: piping transporting aqueous slurries between plants and terminals and within terminals, pumping, and regulating stations.

B31.12 Hydrogen Piping and Pipelines: piping in gaseous and liquid hydrogen service, and pipelines in gaseous hydrogen service.

This is the B31.1 Power Piping Code Section. Hereafter, in this Introduction and in the text of this Code Section B31.1, where the word *Code* is used without specific identification, it means this Code Section.

It is the owner's responsibility to select the Code Section which most nearly applies to a proposed piping installation. Factors to be considered by the owner include: limitations of the Code Section; jurisdictional requirements; and the applicability of other codes and standards. All applicable requirements of the selected Code Section shall be met. For some installations, more than one Code Section may apply to different parts of the installation. The owner is also responsible for imposing requirements supplementary to those of the selected Code Section, if necessary, to assure safe piping for the proposed installation.

Certain piping within a facility may be subject to other codes and standards, including but not limited to:

ASME Boiler and Pressure Vessel Code, Section III: nuclear power piping;

ANSI Z223.1 National Fuel Gas Code: piping for fuel gas from the point of delivery to the connection of each fuel utilization device;

NFPA Fire Protection Standards: fire protection systems using water, carbon dioxide, halon, foam, dry chemical, and wet chemicals;

NFPA 99 Health Care Facilities: medical and laboratory gas systems;

NFPA 8503 Standard for Pulverized Fuel Systems: piping for pulverized coal from the coal mills to the burners;

Building and plumbing codes, as applicable, for potable hot and cold water, and for sewer and drain systems.

The Code sets forth engineering requirements deemed necessary for safe design and construction of pressure piping. While safety is the basic consideration, this factor alone will not necessarily govern the final specifications for any piping system. The designer is cautioned that the Code is not a design handbook; it does not do away with the need for the designer or for competent engineering judgment.

To the greatest possible extent, Code requirements for design are stated in terms of basic design principles and formulas. These are supplemented as necessary with specific requirements to assure uniform application of principles and to guide selection and application of piping elements. The Code prohibits designs and practices known to be unsafe and contains warnings where caution, but not prohibition, is warranted.

The specific design requirements of the Code usually revolve around a simplified engineering approach to a subject. It is intended that a designer capable of applying more complete and rigorous analysis to special or unusual problems shall have latitude in the development of such designs and the evaluation of complex or combined stresses. In such cases the designer is responsible for demonstrating the validity of his approach.

This Code Section includes the following:

(a) references to acceptable material specifications and component standards, including dimensional requirements and pressure-temperature ratings

(b) requirements for design of components and assemblies, including pipe supports

(c) requirements and data for evaluation and limitation of stresses, reactions, and movements associated with pressure, temperature changes, and other forces

(d) guidance and limitations on the selection and application of materials, components, and joining methods

(e) requirements for the fabrication, assembly, and erection of piping

(f) requirements for examination, inspection, and testing of piping

(g) requirements for operation and maintenance of piping systems

It is intended that this Edition of Code Section B31.1 and any subsequent Addenda not be retroactive. Unless agreement is specifically made between contracting parties to use another issue, or the regulatory body having jurisdiction imposes the use of another issue, the latest Edition and Addenda issued at least 6 months prior to the original contract date for the first phase of activity covering a piping system or systems shall be the governing document for all design, materials, fabrication, erection, examination, and testing for the piping until the completion of the work and initial operation.

Users of this Code are cautioned against making use of revisions without assurance that they are acceptable to the proper authorities in the jurisdiction where the piping is to be installed.

Code users will note that clauses in the Code are not necessarily numbered consecutively. Such discontinuities result from following a common outline, insofar as practicable, for all Code Sections. In this way, corresponding material is correspondingly numbered in most Code Sections, thus facilitating reference by those who have occasion to use more than one Section.

The Code is under the direction of ASME Committee B31, Code for Pressure Piping, which is organized and operates under procedures of The American Society of Mechanical Engineers which have been accredited by the American National Standards Institute. The Committee is a continuing one, and keeps all Code Sections current with new developments in materials, construction, and industrial practice. Addenda are issued periodically. New editions are published at intervals of two to five years.

When no Section of the ASME Code for Pressure Piping, specifically covers a piping system, at his discretion the user may select any Section determined to be generally applicable. However, it is cautioned that supplementary requirements to the Section chosen may be necessary to provide for a safe piping system for the intended application. Technical limitations of the various Sections, legal requirements, and possible applicability of other codes or standards are some of the factors to be considered by the user in determining the applicability of any Section of this Code.

The Committee has established an orderly procedure to consider requests for interpretation and revision of Code requirements. To receive consideration,

inquiries must be in writing and must give full particulars (see Mandatory Appendix H covering preparation of technical inquiries). The Committee will not respond to inquiries requesting assignment of a Code Section to a piping installation.

The approved reply to an inquiry will be sent directly to the inquirer. In addition, the question and reply will be published as part of an Interpretation Supplement issued to the applicable Code Section.

A Case is the prescribed form of reply to an inquiry when study indicates that the Code wording needs clarification or when the reply modifies existing requirements of the Code or grants permission to use new materials or alternative constructions. The Case will be published as part of a Case Supplement issued to the applicable Code Section.

The ASME B31 Standards Committee took action to eliminate Code Case expiration dates effective September 21, 2007. This means that all Code Cases in effect as of this date will remain available for use until annulled by the ASME B31 Standards Committee.

Materials are listed in the Stress Tables only when sufficient usage in piping within the scope of the Code has been shown. Materials may be covered by a Case. Requests for listing shall include evidence of satisfactory usage and specific data to permit establishment of allowable stresses, maximum and minimum temperature limits, and other restrictions. Additional criteria can be found in the guidelines for addition of new materials in the ASME Boiler and Pressure Vessel Code, Section II and Section VIII, Division 1, Appendix B. (To develop usage and gain experience, unlisted materials may be used in accordance with para. 123.1.)

Requests for interpretation and suggestions for revision should be addressed to the Secretary, ASME B31 Committee, Three Park Avenue, New York, NY 10016-5990.

POWER PIPING
Chapter I
SCOPE AND DEFINITIONS

100 GENERAL

This Power Piping Code is one of several Sections of the American Society of Mechanical Engineers Code for Pressure Piping, B31. This Section is published as a separate document for convenience.

Standards and specifications specifically incorporated by reference into this Code are shown in Table 126.1. It is not considered practical to refer to a dated edition of each of the standards and specifications in this Code. Instead, the dated edition references are included in an Addenda and will be revised yearly.

100.1 Scope

Rules for this Code Section have been developed considering the needs for applications which include piping typically found in electric power generating stations, in industrial and institutional plants, geothermal heating systems, and central and district heating and cooling systems.

100.1.1 This Code prescribes requirements for the design, materials, fabrication, erection, test, inspection, operation, and maintenance of piping systems.

Piping as used in this Code includes pipe, flanges, bolting, gaskets, valves, relief devices, fittings, and the pressure containing portions of other piping components, whether manufactured in accordance with Standards listed in Table 126.1 or specially designed. It also includes hangers and supports and other equipment items necessary to prevent overstressing the pressure containing components.

Rules governing piping for miscellaneous appurtenances, such as water columns, remote water level indicators, pressure

gages, gage glasses, etc., are included within the scope of this Code, but the requirements for boiler appurtenances shall be in accordance with Section I of the ASME Boiler and Pressure Vessel Code, PG-60.

The users of this Code are advised that in some areas legislation may establish governmental jurisdiction over the subject matter covered by this Code. However, any such legal requirement shall not relieve the owner of his inspection responsibilities specified in para. 136.1.

100.1.2 Power piping systems as covered by this Code apply to all piping and their component parts except as excluded in para. 100.1.3. They include but are not limited to steam, water, oil, gas, and air services.

(A) This Code covers boiler external piping as defined below for power boilers and high temperature, high pressure water boilers in which: steam or vapor is generated at a pressure of more than 15 psig [100 kPa (gage)]; and high temperature water is generated at pressures exceeding 160 psig [1 103 kPa (gage)] and/or temperatures exceeding 250°F (120°C).

Boiler external piping shall be considered as that piping which begins where the boiler proper terminates at

(1) the first circumferential joint for welding end connections; or

(2) the face of the first flange in bolted flanged connections; or

(3) the first threaded joint in that type of connection; and which extends up to and including the valve or valves required by para. 122.1.

The terminal points themselves are considered part of the boiler external piping. The terminal points and piping external to power boilers are illustrated by Figs. 100.1.2(A), l00.1.2(B), and l00.1.2(C).

Piping between the terminal points and the valve or valves required by para. 122.1 shall be provided with Data Reports, inspection, and stamping as required by Section I of the ASME Boiler and Pressure Vessel Code. All welding and brazing of this piping shall be performed by manufacturers or contractors authorized to use the appropriate symbol shown in Figs. PG-105.1 through PG-105.3 of Section I of the ASME Boiler and Pressure Vessel Code. The installation of boiler external piping by mechanical means may be performed by an organization not holding a Code symbol stamp. However, the holder of a valid S, A, or PP Certificate of Authorization shall be responsible for the documentation and hydrostatic test, regardless of the method of assembly. The quality control system requirements of Section I of the ASME Boiler and Pressure Vessel Code shall apply. These requirements are shown in Appendix J of this Code.

The valve or valves required by para. 122.1 are part of the boiler external piping, but do not require ASME Boiler and Pressure Vessel Code, Section I inspection and stamping except for safety, safety relief, and relief valves; see para. 107.8.2. Refer to PG-11

Pipe connections meeting all other requirements of this Code but not exceeding NPS ½ may be welded to pipe or boiler headers without inspection and stamping required by Section I of the ASME Boiler and Pressure Vessel Code.

Fig. 100.1.2(A.1) Code Jurisdictional Limits for Piping — An Example of Forced Flow Steam Generators With No Fixed Steam and Water Line

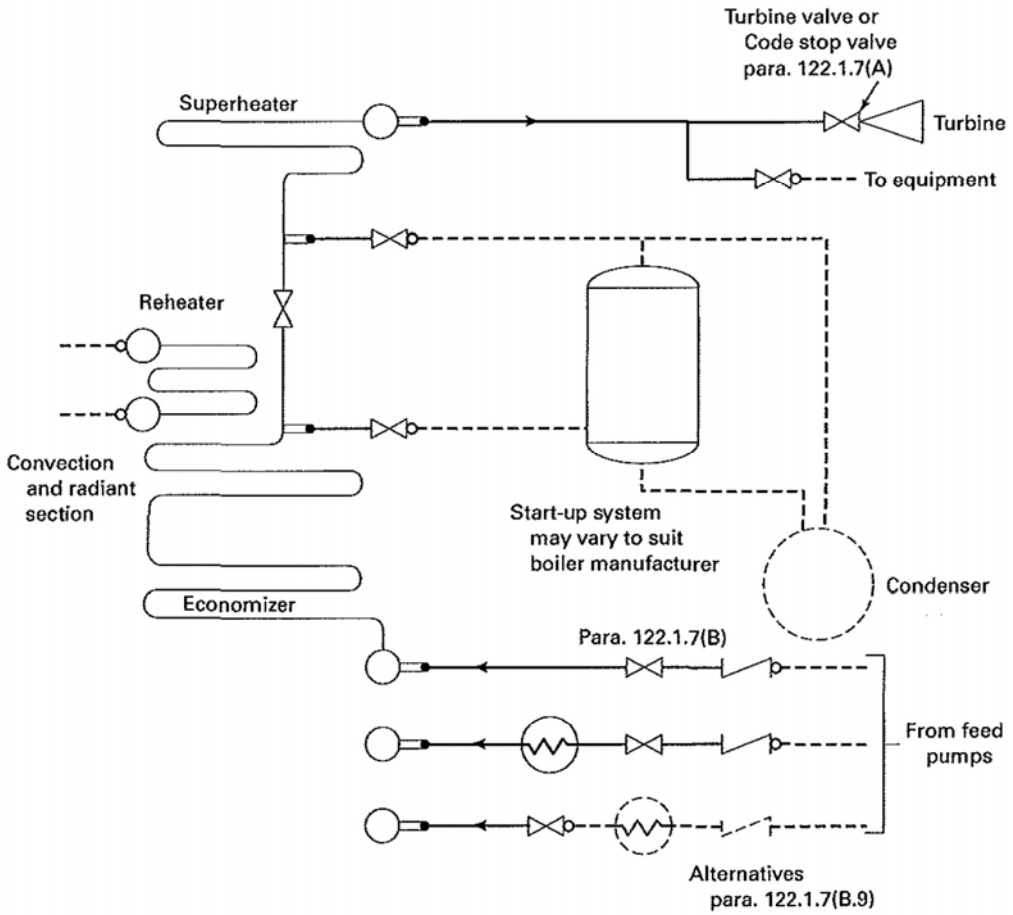

Administrative Jurisdiction and Technical Responsibility

——— Boiler Proper — The ASME Boiler and Pressure Vessel Code (ASME BPVC) has total administrative jurisdiction and technical responsibility. Refer to ASME BPVC Section I Preamble.

•——— Boiler External Piping and Joint (BEP) — The ASME BPVC has total administrative jurisdiction (mandatory certification by Code Symbol stamping, ASME Data Forms, and Authorized Inspection) of BEP. The ASME Section Committee B31.1 has been assigned technical responsibility. Refer to ASME BPVC Section I Preamble, fifth, sixth, and seventh paragraphs and ASME B31.1 Scope, para. 100.1.2(A). Applicable ASME B31.1 Editions and Addenda are referenced in ASME BPVC Section I, PG-58.3.

o- - - - Nonboiler External Piping and Joint (NBEP) — The ASME Code Committee for Pressure Piping, B31, has total administrative and technical responsibility.

Fig. 100.1.2(A.2) Code Jurisdictional Limits for Piping — An Example of Steam Separator Type Forced Flow Steam Generators With No Fixed Steam and Water Line

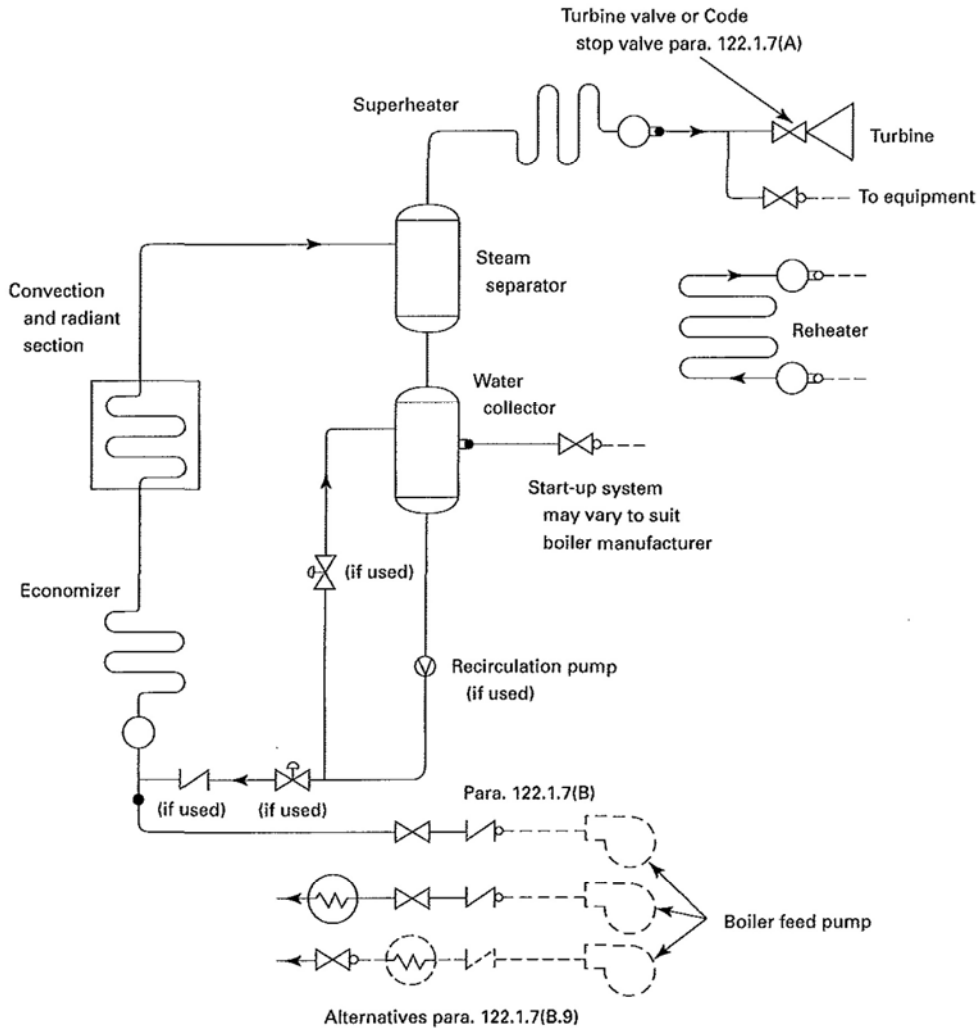

Administrative Jurisdiction and Technical Responsibility

——— Boiler Proper – The ASME Boiler and Pressure Vessel Code (ASME BPVC) has total administrative jurisdiction and technical responsibility. Refer to ASME BPVC Section I Preamble.

●——— Boiler External Piping and Joint (BEP) – The ASME BPVC has total administrative jurisdiction (mandatory certification by Code Symbol stamping, ASME Data Forms, and Authorized Inspection) of BEP. The ASME Section Committee B31.1 has been assigned technical responsibility. Refer to ASME BPVC Section I Preamble, fifth, sixth, and seventh paragraphs and ASME B31.1 Scope, para. 100.1.2(A). Applicable ASME B31.1 Editions and Addenda are referenced in ASME BPVC Section I, PG-58.3.

○– – – – Nonboiler External Piping and Joint (NBEP) – The ASME Code Committee for Pressure Piping, B31, has total administrative and technical responsibility.

Fig. 100.1.2(B) Code Jurisdictional Limits for Piping — Drum-Type Boilers

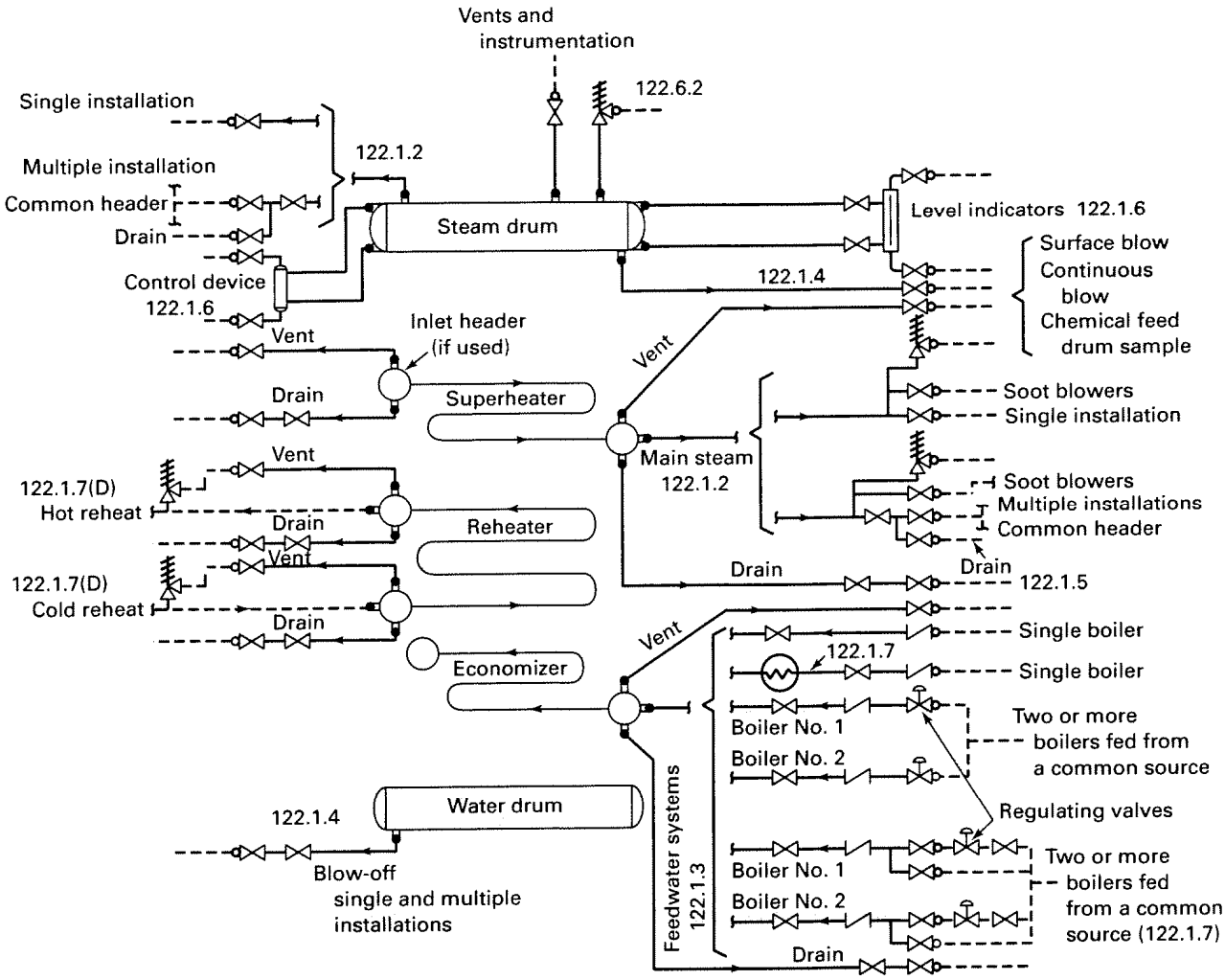

Administrative Jurisdiction and Technical Responsibility

——— Boiler Proper — The ASME Boiler and Pressure Vessel Code (ASME BPVC) has total administrative jurisdiction and technical responsibility. Refer to ASME BPVC Section I Preamble.

●——— Boiler External Piping and Joint (BEP) — The ASME BPVC has total administrative jurisdiction (mandatory certification by Code Symbol stamping, ASME Data Forms, and Authorized Inspection) of BEP. The ASME Section Committee B31.1 has been assigned technical responsibility. Refer to ASME BPVC Section I Preamble and ASME B31.1 Scope, para. 100.1.2(A). Applicable ASME B31.1 Editions and Addenda are referenced in ASME BPVC Section I, PG-58.3.

o----- Nonboiler External Piping and Joint (NBEP) — The ASME Code Committee for Pressure Piping, B31, has total administrative and technical responsibility.

Fig. 100.1.2(C) Code Jurisdictional Limits for Piping — Spray-Type Desuperheater

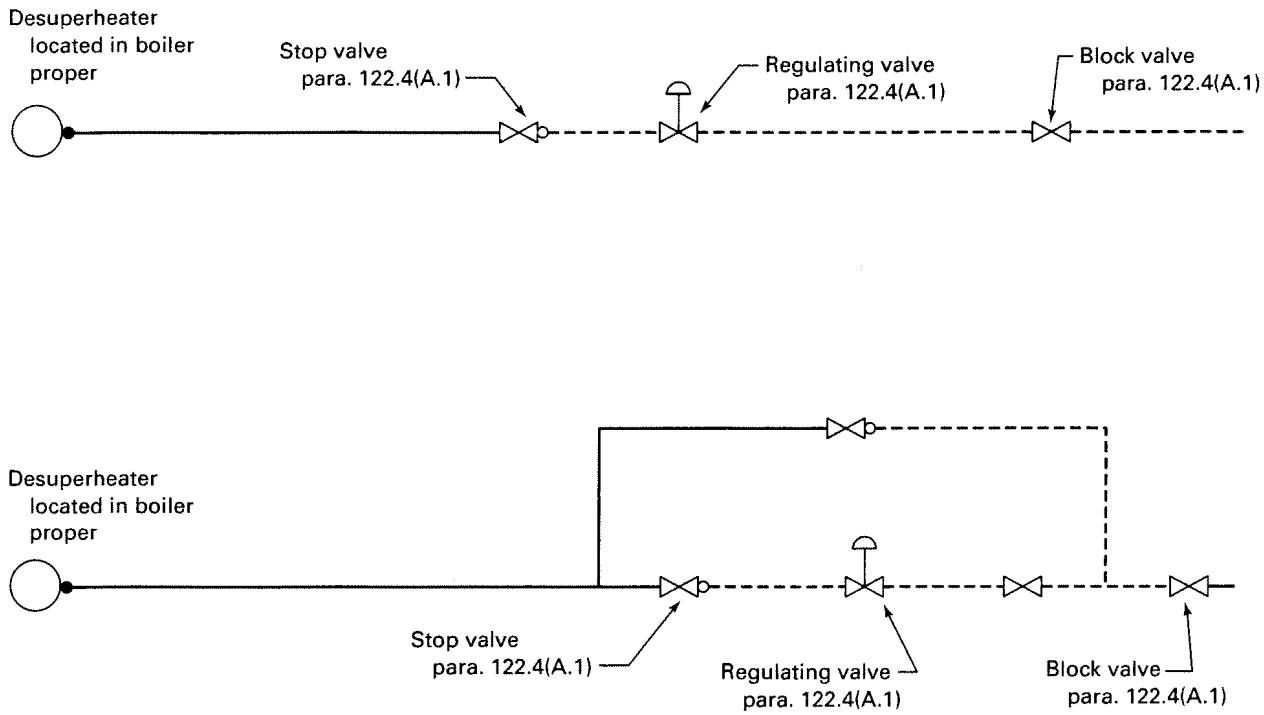

Administrative Jurisdiction and Technical Responsibility

——— Boiler Proper — The ASME Boiler and Pressure Vessel Code (ASME BPVC) has total administrative jurisdiction and technical responsibility. Refer to ASME BPVC Section 1 Preamble.

●——— Boiler External Piping and Joint (BEP) — The ASME BPVC has total administrative jurisdiction (mandatory certification by Code Symbol stamping, ASME Data Forms, and Authorized Inspection) of BEP. The ASME Section Committee B31.1 has been assigned technical responsibility. Refer to ASME BPVC Section I Preamble and ASME B31.1 Scope, para. 100.1.2(A). Applicable ASME B31.1 Editions and Addenda are referenced in ASME BPVC Section I, PG-58.3.

o- - - - Nonboiler External Piping and Joint (NBEP) — The ASME Code Committee for Pressure Piping, B31, has total administrative and technical responsibility.

(B) Nonboiler external piping includes all the piping covered by this Code except for that portion defined above as boiler external piping.

100.1.3 This Code does not apply to the following:

(A) economizers, heaters, pressure vessels, and components covered by Sections of the ASME Boiler and Pressure Vessel Code

(B) building heating and distribution steam and condensate piping designed for 15 psig [100 kPa (gage)] or less, or hot water heating systems designed for 30 psig [200 kPa (gage)] or less

(C) piping for hydraulic or pneumatic tools and their components downstream of the first block or stop valve off the system distribution header

(D) piping for marine or other installations under Federal control

(E) towers, building frames, tanks, mechanical equipment, instruments, and foundations

104.1.3 Straight Pipe Under External Pressure. For determining wall thickness and stiffening requirements for straight pipe under external pressure, the procedures outlined in UG-28, UG-29, and UG-30 of Section VIII, Division 1 of the ASME Boiler and Pressure Vessel Code shall be followed.

104.2 Curved Segments of Pipe

104.2.1 Pipe Bends. Pipe bends shall be subject to the following limitations:

(A) The minimum wall thickness shall meet the requirements of para. 102.4.5 and the fabrication requirements of para. 129.

(B) Limits on flattening and buckling at bends may be specified by design, depending upon the service, the material, and the stress level involved. Where limits on flattening and buckling are not specified by design, the requirements of para. 129.1 shall be met.

104.2.2 Elbows. Elbows manufactured in accordance with the standards listed in Table 126.1 are suitable for use at the pressure-temperature ratings specified by such standards, subject to the requirements of para. 106.

104.3 Intersections

104.3.1 Branch Connections

(A) This paragraph gives rules governing the design of branch connections to sustain internal and external pressure in cases where the axes of the branch and the run intersect, and the angle between the axes of the branch and of the run is between 45 deg and 90 deg, inclusive.

Branch connections in which the smaller angle between the axes of the branch and the run is less than 45 deg or branch connections where the axes of the branch and the run do not intersect impose special design and fabrication problems. The rules given herein may be used as a guide, but sufficient additional strength must be provided to assure safe service. Such branch connections shall be designed to meet the requirement of para. 104.7.

(B) Branch connections in piping may be made from materials listed in Appendix A by the use of the following:

(B.1) fittings, such as tees, laterals, and crosses made in accordance with the applicable standards listed in Table 126.1 where the attachment of the branch pipe to the fitting is by butt welding, socket welding, brazing, soldering, threading, or by a flanged connection.

(B.2) weld outlet fittings, such as cast or forged nozzles, couplings and adaptors, or similar items where the attachment of the branch pipe to the fitting is by butt welding, socket welding, threading, or by a flanged connection. Such weld outlet fittings are attached to the run by welding similar to that shown in Fig. 127.4.8 (E) or Fig. 127.4.8 (F), as applicable. MSS SP-97 may be used

for design and manufacturing standards for integrally reinforced forged branch outlet fittings. Couplings are restricted to a maximum of NPS 3.

(B.3) extruded outlets at right angles to the run pipe, in accordance with (G) below, where the attachment of the branch pipe is by butt welding.

(B.4) piping directly attached to the run pipe by welding in accordance with para. 127.4.8 or by socket welding or threading as stipulated below:

(B.4.1) socket welded right angle branch connections may be made by attaching the branch pipe directly to the run pipe provided.

(B.4.1.1) the nominal size of the branch does not exceed NPS 2 or one-fourth of the nominal size of the run, whichever is smaller.

(B.4.1.2) the depth of the socket measured at its minimum depth in the run pipe is at least equal to that shown in ASME B16.11. If the run pipe wall does not have sufficient thickness to provide the proper depth of socket, an alternate type of construction shall be used.

(B.4.1.3) the clearance between the bottom of the socket and the end of the inserted branch pipe is in accordance with Fig. 127.4.4(C).

(B.4.1.4) the size of the fillet weld is not less than 1.09 times the nominal wall thickness of the branch pipe.

(B.4.2) threaded right angle branch connections may be made by attaching the branch pipe directly to the run provided

(B.4.2.1) the nominal size of the branch does not exceed NPS 2 or one-fourth of the nominal size of the run, whichever is smaller.

(B.4.2.2) the minimum thread engagement is: 6 full threads for NPS ½ and NPS ¾ branches; 7 for NPS 1, NPS 1¼, and NPS 1½ branches; and 8 for NPS 2 branches. If the run pipe wall does not have sufficient thickness to provide the proper depth for thread engagement, an alternative type of construction shall be used.

(C) *Branch Connections Not Requiring Reinforcement.* A pipe having a branch connection is weakened by the opening that must be made in it. Unless the wall thickness of the branch and/or run pipe is sufficiently in excess of that required to sustain the pressure, it is necessary to provide additional material in order to meet the reinforcement requirements of (D) and (E) below. However, there are certain branch connections for which supporting calculations are not required. These are as follows:

(C.1) branch connections made by the use of a fitting (tee, lateral, cross, or branch weld-on fitting), manufactured in accordance with a standard listed in Table 126.1, and used within the limits of pressure-temperature ratings specified in that standard.

(C.2) branch connections made by welding a coupling or half coupling directly to the run pipe in accordance with Fig. 127.4.8(E), provided the nominal diameter of the branch does not exceed NPS 2 or one-fourth the nominal diameter of the run, whichever is less. The minimum wall thickness of the coupling anywhere in the reinforcement zone (if threads are in the zone, wall thickness is measured from the root of the thread to the minimum O.D.) shall not be less than that of the unthreaded branch pipe. In no case shall the thickness of the coupling be less than extra heavy or Class 3000 rating.

Small branch connections NPS 2 or smaller as shown in Fig. 127.4.8(F) may be used, provided t_w is not less than the thickness of schedule 160 pipe of the branch size.

(C.3) integrally reinforced fittings welded directly to the run pipe when the reinforcements provided by the fitting and

the deposited weld metal meets the requirements of (D) below.

(C.4) integrally reinforced extruded outlets in the run pipe. The reinforcement requirements shall be in accordance with (G) below.

(D) *Branch Connections Subject to Internal Pressure Requiring Reinforcement*

(D.1) Reinforcement is required when it is not provided inherently in the components of the branch connection. This paragraph gives rules covering the design of branch connections to sustain internal pressure in cases where the angle between the axes of the branch and of the run is between 45 deg and 90 deg. Subparagraph (E) below gives rules governing the design of connections to sustain external pressure.

(D.2) Figure 104.3.1(D) illustrates the notations used in the pressure-temperature design conditions of branch connections. These notations are as follows:

b = subscript referring to branch

D_o = outside diameter of pipe, in. (mm)

d_1 = inside centerline longitudinal dimension of the finished branch opening in the run of the pipe, in. (mm)

$= [D_{ob} - 2(T_b - A)]/\sin \alpha$

d_2 = "half width" of reinforcing zone, in. (mm)

= the greater of d_1 or $(T_b - A) + (T_h - A) + d_1/2$ but in no case more than D_{oh}, in. (mm)

h = subscript referring to run or header

L_4 = altitude of reinforcement zone outside of run, in. (mm)

$= 2.5(T_b - A) + t_r$ or $2.5(T_h - A)$, whichever is smaller

t_r = thickness of attached reinforcing pad, in Example A, in. (mm); or height of the largest 60 deg right triangle supported by the run and branch outside diameter projected surfaces and lying completely within the area of integral reinforcement, in Example B, in. (mm)

T_b, T_h = actual (by measurement), or minimum wall thickness of the branch or header pipe, in. (mm), permissible under purchase specification

t_{mb}, t_{mh} = required minimum wall thickness, in. (mm), of the branch or header pipe as determined by use of eq. (3) or (3A) in para. 104.1.2(A)

α = angle between axes of branch and run, deg

(D.2.1) If the run pipe contains a longitudinal seam which is not intersected by the branch, the stress value of seamless pipe of comparable grade may be used to determine the value of t_{mh} for the purpose of reinforcement calculations only. If the branch intersects a longitudinal weld in the run, or if the branch contains a weld, the weld joint efficiency for either or both shall enter the calculations. If the branch and run both contain longitudinal welds, care shall be taken to ensure that the two welds do not intersect each other.

(D.2.2) The required reinforcement area in square inches (square millimeters) for branch connections shall be the quantity

$$A_7 = A_6(2 - \sin \alpha) = (t_{mh} - A)d_1 (2 - \sin \alpha)$$

For right angle connections the required reinforcement becomes

$$A_7 = A_6 = (t_{mh} - A)d_1$$

The required reinforcement must be within the limits of the reinforcement zone as defined in (D.2.4) below.

(D.2.3) The reinforcement required by (D.2) shall be that provided by any combination of areas A_1, A_2, A_3, A_4, and A_5, as defined below and illustrated in Fig. 104.3.1(D) where

A_1 = area provided by excess pipe wall in the run

$= (2d_2 - d_1)(T_h - t_{mh})$

A_2 = area, in.^{2} (mm^2), provided by excess pipe wall in the branch for a distance L_4 above the run

$= 2L_4 (T_b - t_{mb})/\sin \alpha$

A_3 = area provided by deposited weld metal beyond the outside diameter of the run

and branch, and for fillet weld attachments of rings, pads, and saddles

A_4 = area provided by a reinforcing ring, pad, or integral reinforcement. The value of A_4 may be taken in the same manner in which excess header metal is considered, provided the weld completely fuses the branch pipe, run pipe, and ring or pad, or integral reinforcement. For welding branch connections refer to para. 127.4.8.

A_5 = area provided by a saddle on right angle connections

= (O.D. of saddle - D_{ob})t_r

A6 = pressure design area expected at the end of service life

= $(t_{mh} - A)d_1$

Portions of the reinforcement area may be composed of materials other than those of the run pipe, but if the allowable stress of these materials is less than that for the run pipe, the corresponding calculated reinforcement area provided by this material shall be reduced in the ratio of the allowable stress being applied to the reinforcement area. No additional credit shall be taken for materials having higher allowable stress values than the run pipe.

(D.2.4) *Reinforcement Zone.* The reinforcement zone is a parallelogram whose width shall extend a distance d_2 on each side of the centerline of the branch pipe, and whose altitude shall start at the inside surface of the run pipe and extend to a distance L_4 from the outside surface of the run pipe.

(D.2.5) *Reinforcement of Multiple Openings.* It is preferred that multiple branch openings be spaced so that their reinforcement zones do not overlap. If closer spacing is necessary, the following requirement shall be met. The two or more openings shall be reinforced in accordance with (D.2), with a combined reinforcement that has a strength equal to the combined strength of the reinforcement that would be required for the separate openings. No portion of the cross section shall be considered as applying to more than one opening, or be evaluated more than once in a combined area.

When more than two adjacent openings are to be provided with a combined reinforcement, the minimum distance between centers of any two of these openings should preferably be at least 1½ times their average diameter, and the area of reinforcement between them shall be at least equal to 50% of the total required for these two openings.

(D.2.6) *Rings, Pads, and Saddles.* Reinforcement provided in the form of rings, pads, or saddles shall not be appreciably narrower at the side than at the crotch.

A vent hole shall be provided at the ring, pad, or saddle to provide venting during welding and heat treatment. Refer to para. 127.4.8(E).

Rings, pads, or saddles may be made in more than one piece, provided the joints between pieces have full thickness welds, and each piece is provided with a vent hole.

(D.2.7) *Other Designs.* The adequacy of designs to which the reinforcement requirements of para. 104.3 cannot be applied shall be proven by burst or proof tests on scale models or on full size structures, or by calculations previously substantiated by successful service of similar design

Fig. 104.3.1(D) Reinforcement of Branch Connections

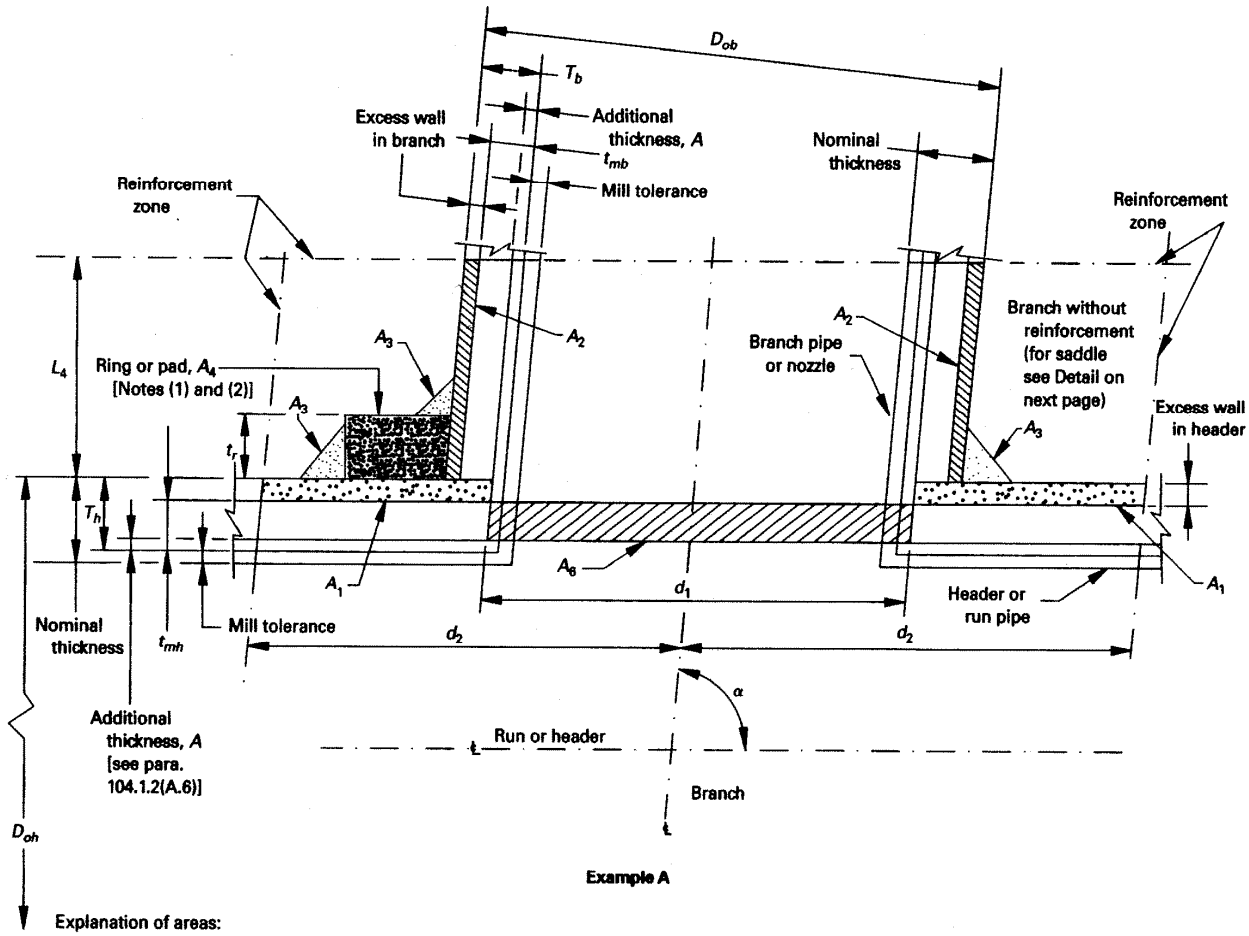

Fig. 104.3.1(D) Reinforcement of Branch Connections (Cont'd)

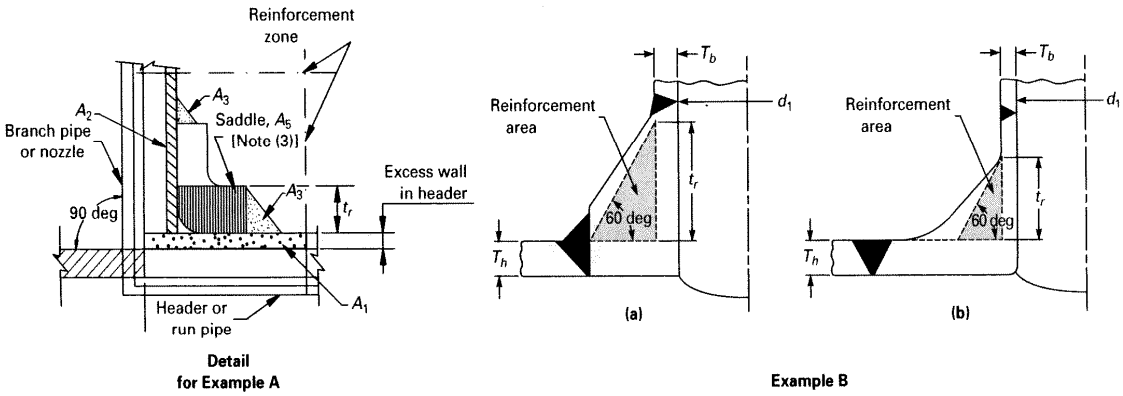

GENERAL NOTE:

(a) This Figure illustrates the nomenclature of para. 104.3.1(D).

(b) Required reinforcement area $= A_7 = A_6\ (2 - \sin\alpha) = (t_{mh} - A)d_t\ (2 - \sin\alpha)$.

(c) Available reinforcement areas $= A_1 + A_2 + A_3 + A_4 + A_5$ (as applicable).

(d) Available reinforcement areas ≥ required reinforcement area.

NOTES:

(1) When a ring or pad is added as reinforcement (Example A), the value of reinforcement area may be taken in the same manner in which excess header metal is considered, provided the weld completely fuses the branch pipe, header pipe, and ring or pad. Typical acceptable methods of welding which meet the above requirement are shown in Fig. 127.4.8(D), sketches (c) and (d).

(2) Width to height of rings and pads shall be reasonably proportioned, preferably on a ratio as close to 4:1 as the available horizontal space within the limits of the reinforcing zone along the run and the outside diameter of the branch will permit, but in no case may the ratio be less than 1:1.

(3) Reinforcement saddles are limited to use on 90 deg branches (Example A Detail).

(E) *Branch Connections Subject to External Pressure Requiring Reinforcement.* The reinforcement area in square inches (square millimeters) required for branch connections subject to external pressure shall be

$$0.5 t_{mh} d_1\ (2 - \sin\alpha)$$

where t_{mh} is the required header wall thickness determined for straight pipe under external pressure, using procedures outlined in UG-28, UG-29, UG-30, and UG-31 of Section VIII, Division 1, of the ASME Boiler and Pressure Vessel Code.

Procedures established heretofore for connections subject to internal pressure shall apply for connections subject to external pressure provided that D_{oh}, D_{ob}, and t_r are reduced to compensate for external corrosion, if required by design conditions.

(F) *Branch Connections Subject to External Forces and Moments.* The requirements of the preceding paragraphs are intended to assure safe performance of a branch connection subjected only to pressure. However, when external forces and moments are applied to a branch connection by thermal expansion and contraction, by dead weight of piping, valves, and fittings, covering and contents, or by earth settlement, the branch connection shall be analyzed considering the stress intensification factors as specified in Appendix D. Use of ribs, gussets, and clamps designed in accordance with para. 104.3.4 is permissible to stiffen the branch connection, but their areas cannot be counted as contributing to the required reinforcement area of the branch connection.

(G) *Extruded Outlets Integrally Reinforced*

(G.1) The following definitions, modifications, notations, and requirements are specifically applicable to extruded outlets. The designer shall make proper wall thickness allowances in order that the required minimum reinforcement is assured over the design life of the system.

(G.2) *Definition.* An extruded outlet header is defined as a header in which the extruded lip at the outlet has an altitude

above the surface of the run which is equal to or greater than the radius of curvature of the external contoured portion of the outlet; i.e., $h_o \geq r_o$. See nomenclature and Fig. 104.3.1(G).

(G.3) These rules apply only to cases where the axis of the outlet intersects and is perpendicular to the axis of the run. These rules do not apply to any nozzle in which additional nonintegral material is applied in the form of rings, pads, or saddles.

(G.4) The notation used herein is illustrated in Fig. 104.3.1(G). All dimensions are in inches (millimeters).

D = outside diameter of run

d = outside diameter of branch pipe

d_b = corroded internal diameter of branch pipe

d_c = corroded internal diameter of extruded outlet measured at the level of the outside surface of the run

d_r = corroded internal diameter of run

h_o = height of the extruded lip. This must be equal to or greater than r_o, except as shown in (G.4.2) below.

L_8 = altitude of reinforcement zone

$= 0.7\sqrt{dT_o}$

T_o = corroded finished thickness of extruded outlet measured at a height equal to r_o above the outside surface of the run

$t_b - A$ = actual thickness of branch wall, not including corrosion allowance

$t_h - A$ = actual thickness of run wall, not including the corrosion allowance

$t_{mb} - A$ = required thickness of branch pipe according to wall thickness eq. (3) or (3A) in para. 104.1.2(A), but not including any thickness for corrosion

$t_{mh} - A$ = required thickness of the run according to eq. (3) or (3A) in para. 104.1.2(A), but not including any allowance for corrosion

r_1 = half width of reinforcement zone (equal to d_c)

r_o = radius of curvature of external contoured portion of outlet measured in the plane containing the axes of the run and branch. This is subject to the following limitations:

(G.4.1) *Minimum Radius.* This dimension shall not be less than $0.05d$ except that on branch diameters larger than NPS 30, it need not exceed 1.50 in. (38 mm).

(G.4.2) *Maximum Radius.* For outlet pipe sizes 6 in. (150 mm) nominal and larger, this dimension shall not exceed $0.10d + 0.50$ in. ($0.10d + 12.7$ mm). For outlet pipe sizes less than NPS 6, this dimension shall be not greater than 1.25 in. (32 mm).

(G.4.3) When the external contour contains more than one radius, the radius of any arc sector of approximately 45 deg shall meet the requirements of (G.4.1) and (G.4.2) above. When the external contour has a continuously varying radius, the radius of curvature at every point on the contour shall meet the requirements of (G.4.1) and (G.4.2) above.

(G.4.4) Machining other than grinding for weld cleanup shall not be employed in order to meet the above requirements.

(G.5) *Required Area.* The required area is defined as

$$A_7 = K\,(t_{mh} - A)\,d_c$$

where K shall be taken as follows.

For d/D greater than 0.60,

$$K = 1.00$$

For d/D greater than 0.15 and not exceeding 0.60,

$$K = 0.6 + 2/3\ d/D$$

For d/D equal to or less than 0.15,

$$K = 0.70$$

The design must meet criteria that the reinforcement area defined in (G.6) below is not less than the required area.

Fig. 104.3.1(G) Reinforced Extruded Outlets

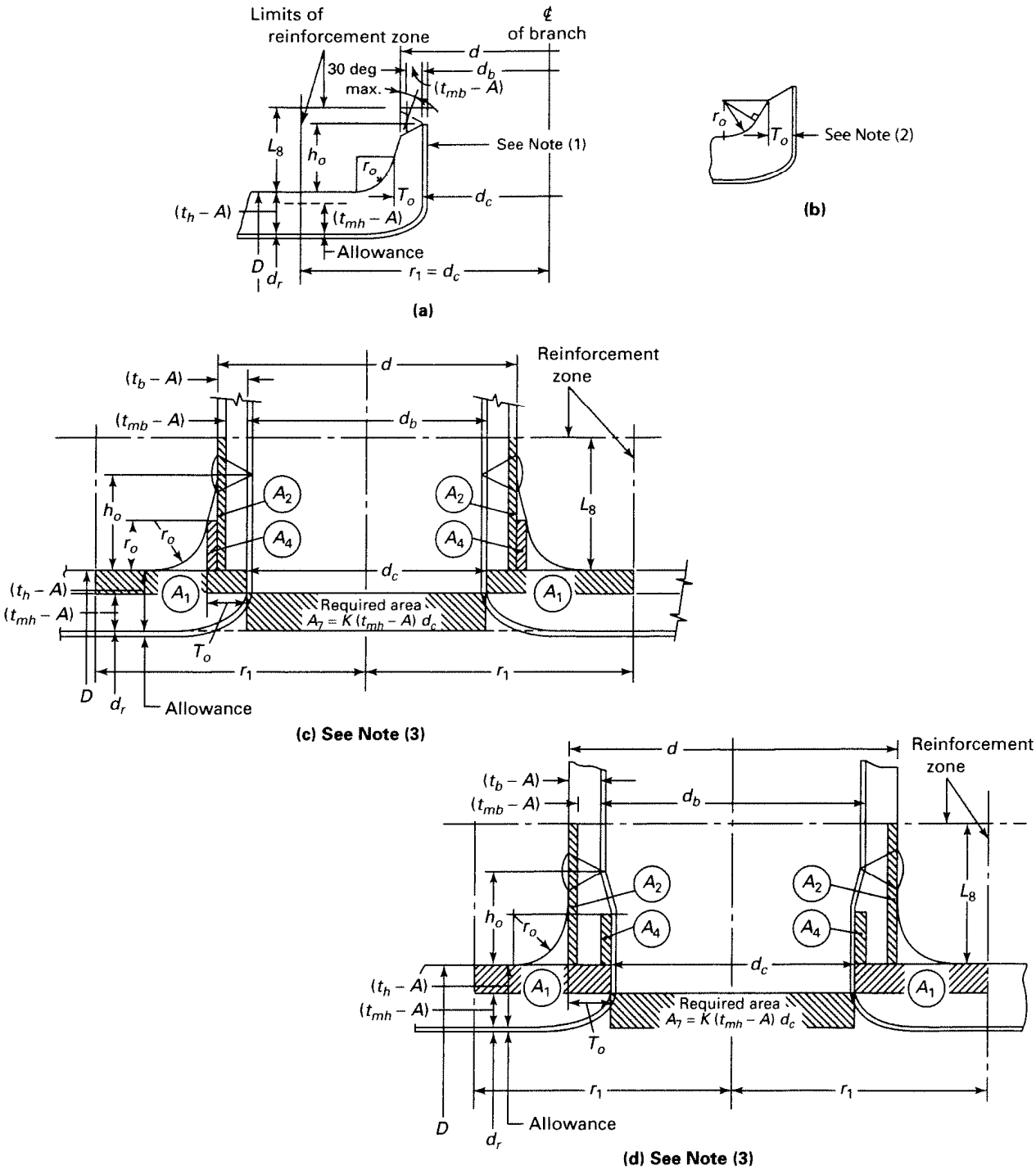

NOTES:
(1) Taper bore inside diameter (if required) to match branch pipe 1:3 maximum taper.
(2) Sketch to show method of establishing T_o when the taper encroaches on the crotch radius.
(3) Sketch is drawn for condition where $k = 1.00$.

(G.6) *Reinforcement Area.* The reinforcement area shall be the sum of areas

$$A_1 + A_2 + A_4$$

as defined below.

(G.6.l) Area A_1 is the area lying within the reinforcement zone resulting from any excess thickness available in the run wall.

$$A_1 = d_c(t_n - t_{mh})$$

(G.6.2) Area A_2 is the area lying within the reinforcement zone resulting from any excess thickness available in the branch pipe wall.

$$A_2 = 2L_8(t_b - t_{mh})$$

(G.6.3) Area A_4 is the area lying within the reinforcement zone resulting from excess thickness available in the extruded outlet lip.

$$A_4 = 2r_o\,[T_o - (t_b - A)]$$

(G.7) *Reinforcement of Multiple Openings.* It is preferred that multiple branch openings be spaced so that their reinforcement zones do not overlap. If closer spacing is necessary, the following requirements shall be met. The two or more openings shall be reinforced in accordance with (G) with a combined reinforcement that has a strength equal to the combined strength of the reinforcement that would be required for separate openings. No portion of the cross section shall be considered as applying to more than one opening, or be evaluated more than once in a combined area.

(G.8) In addition to the above, the manufacturer shall be responsible for establishing and marking on the section containing extruded outlets, the design pressure and temperature. The manufacturer's name or trademarks shall be marked on the section.

104.3.3 Miters. Miter joints, and the terminology related thereto, are described in Appendix D. A widely spaced miter with

$$\theta < 9\sqrt{\frac{t_n}{r}}\ \text{deg}$$

shall be considered to be equivalent to a girth buttwelded joint, and the rules of this paragraph do not apply. Miter joints, and fabricated pipe bends consisting of segments of straight pipe welded together, with θ equal to or greater than this calculated value may be used within the limitations described below.

(A) Pressure shall be limited to 10 psi (70 kPa) under the following conditions:

(A.1) The assembly includes a miter weld with $\theta > 22.5$ deg, or contains a segment which has a dimension

$$B < 6t_n$$

(A.2) The thickness of each segment of the miter is not less than that determined in accordance with para. 104.1.

(A.3) The contained fluid is nonflammable, non-toxic, and incompressible, except for gaseous vents to atmosphere.

(A.4) The number of full pressure cycles is less than 7,000 during the expected lifetime of the piping system.

(A.5) Full penetration welds are used in joining miter segments.

(B) Pressure shall be limited to 100 psi (700 kPa) under the conditions defined in (A.2), (A.3), (A.4), and (A.5) above, in addition to the following:

(B.1) the angle θ does not exceed 22.5 deg

(B.2) the assembly does not contain any segment which has a dimension

$$B < 6t_n$$

(C) Miters to be used in other services or at design pressures above 100 psi (700 kPa) shall meet the requirements of para. 104.7.

(C.1) When justification under para. 104.7 is based on comparable service conditions, such conditions must be established as comparable with respect to cyclic as well as static loadings.

(C.2) When justification under para. 104.7 is based on an analysis, that analysis and substantiating tests shall consider the discontinuity stresses which exist at the juncture between segments; both for static

(including brittle fracture) and cyclic internal pressure.

(C.3) The wall thickness, t_s, of a segment of a miter shall not be less than specified in (C.3.1) or (C.3.2) below, depending on the spacing.

(C.3.1) For closely spaced miter bends (see Appendix D for definition)

$$t_s = t_m \frac{2 - r/R}{2(1 - r/R)}$$

(C.3.2) For widely spaced miters (see Appendix D for definition)

$$t_s = t_m(1 + 0.64\sqrt{r/t_s}\tan\theta)$$

(The above equation requires an iterative or quadratic solution for t_s.)

104.3.4 Attachments. External and internal attachments to piping shall be designed so as not to cause flattening of the pipe, excessive localized bending stresses, or harmful thermal gradients in the pipe wall. It is important that such attachments be designed to minimize stress concentrations in applications where the number of stress cycles, due either to pressure or thermal effect, is relatively large for the expected life of the equipment.

104.4 Closures

104.4.1 General. Closures for power piping systems shall meet the applicable requirements of this Code and shall comply with the requirements described in (A) or (B) below. Closures may be made

(A) by use of closure fittings, such as threaded or welded plugs, caps, or blind flanges, manufactured in accordance with standards listed in Table 126.1, and used within the specified pressure-temperature ratings, or

(B) in accordance with the rules contained in the ASME Boiler and Pressure Vessel Code, Section I, Power Boilers, PG-31, or Section VIII, Pressure Vessels, Division 1, UG-34 and UW-13, calculated from

$$t_m = t + A$$

where

t = pressure design thickness, calculated for the given closure shape and direction of loading using appropriate equations and procedures in Section I or Section VIII, Division 1 of the ASME Boiler and Pressure Vessel Code.

The definition of A and the symbols used in determining t shall have the definitions shown herein, instead of those given in the ASME Boiler and Pressure Vessel Code.

Attachment of a welded flat permanent closure with only a single fillet weld is not permitted.

104.4.2 Openings in Closures. Openings in closures may be made by welding, extruding, or threading. Attachment to the closure shall be in accordance with the limitations provided for such connections in para. 104.3.1 for branch connections. If the size of the opening is greater than one-half of the inside diameter of the closure, the opening shall be designed as a reducer in accordance with para. 104.6.

Other openings in closures shall be reinforced in accordance with the requirements of reinforcement for a branch connection. The total cross-sectional area required for reinforcement in any plane passing through the center of the opening and normal to the surface of the closure shall not be less than the quantity of d_5t, where

d_5 = diameter of the finished opening, in. (mm)

t = as defined in (B) above

121.8 Structural Attachments

121.8.1 Nonintegral Type

(A) Nonintegral attachments include clamps, slings, cradles, saddles, straps, and clevises.

(B) When clamps are used to support vertical lines, it is recommended that shear lugs be welded to the pipe to prevent slippage. The provisions of para. 12l.8.2(B) shall apply.

(C) In addition to the provision of (B) above, clamps to support vertical lines should be designed to support the total load on either arm in the event the load shifts due to pipe and/or hanger movement.

121.8.2 Integral Type

(A) Integral attachments include ears, shoes, lugs, cylindrical attachments, rings, and skirts which are fabricated so that the attachment is an integral part of the piping component. Integral attachments shall be used in conjunction with restraints or braces where multiaxial restraint in a single member is to be maintained. Consideration shall be given to the localized stresses induced into the piping component by the integral attachments. Where applicable, the conditions of para. 12l.8.1(C) are to apply.

(B) Integral lugs, plates, angle clips, etc., used as part of an assembly for the support or guiding of pipe may be welded directly to the pipe provided the materials are compatible for welding and the design is adequate for the temperature and load. The design of hanger lugs for attachment to piping for high temperature service shall be such as to provide for differential expansion between the pipe and the attached lug.

121.9 Loads and Supporting Structures

Considerations shall be given to the load carrying capacity of equipment and the supporting structure. This may necessitate closer spacing of hangers on lines with extremely high loads.

121.10 Requirements for Fabricating Pipe Supports

Pipe supports shall be fabricated in accordance with the requirements of para. 130.

PART 6
SYSTEMS

122 DESIGN REQUIREMENTS PERTAINING TO SPECIFIC PIPING SYSTEMS

Except as specifically stated otherwise in this Part 6, all provisions of the Code apply fully to the piping systems described herein.

122.1 Boiler External Piping; in Accordance With Para. 100.1.2(A) - Steam, Feedwater. Blowoff. and Drain Piping

122.1.1 General. The minimum pressure and temperature and other special requirements to be used in the design for steam, feedwater, blowoff, and drain piping from the boiler to the valve or valves required by para. 122.1 shall be as specified in the following paragraphs. Design requirements for desuperheater spray piping connected to desuperheaters located in the boiler proper and in main steam piping are provided in para. 122.4.

(A) It is intended that the design pressure and temperature be selected sufficiently in excess of any expected operating conditions, not necessarily continuous, to permit satisfactory operation without operation of the overpressure protection devices. Also, since the operating temperatures of fired equipment can vary, the expected temperature at the connection to the fired equipment shall include the manufacturer's maximum temperature tolerance.

(B) In a forced flow steam generator with no fixed steam and water line, it is permissible to design the external piping, valves, and fittings attached to the pressure parts for different pressure levels along the path through the steam generator of water-steam flow. The values of design pressure and the design temperature to be used for the external piping, valves, and fittings shall be not less than that required for the expected maximum sustained operating pressure and temperature to which the abutted pressure part is subjected except when one or more of

the overpressure protection devices covered by PG-67.4 of Section I of the ASME Boiler and Pressure Vessel Code is in operation. The steam piping shall comply with the requirements for the maximum sustained operating conditions as used in (A) above, or for the design throttle pressure plus 5%, whichever is greater.

(C) Provision shall be made for the expansion and contraction of piping connected to boilers to limit forces • and moments transmitted to the boiler, by providing substantial anchorage at suitable points, so that there shall be no undue strain transmitted to the boiler. Steam reservoirs shall be used on steam mains when heavy pulsations of the steam currents cause vibration.

(D) Piping connected to the outlet of a boiler for any purpose shall be attached by

(D.1) welding to a nozzle or socket welding fitting

(D.2) threading into a tapped opening with a threaded fitting or valve at the other end

(D.3) screwing each end into tapered flanges, fittings, or valves with or without rolling or peening

(D.4) bolted joints including those of the Van Stone type

(D.5) blowoff piping of firetube boilers shall be attached in accordance with (D.2) above if exposed to products of combustion or in accordance with (D.2), (D.3), or (D.4) above if not so exposed

(E) Nonferrous pipe or tubes shall not exceed NPS 3 in diameter.

(F) American National Standard slip-on flanges shall not exceed NPS 4. Attachment of slip-on flanges shall be by double fillet welds. The throats of the fillet welds shall not be less than 0.7 times the thickness of the part to which the flange is attached.

(G) Hub-type flanges shall not be cut from plate material.

(H) American National Standard socket welded flanges may be used in piping or boiler nozzles provided the dimensions do not exceed NPS 3 for Class 600 and lower and NPS 2½ in Class 1500.

122.1.2 Steam Piping

(A) The value of *P* to be used in the formulas in para. 104 shall be as follows:

(A.1) For steam piping connected to the steam drum or to the superheater inlet header up to the first stop valve in each connection, the value of *P* shall be not less than the lowest pressure at which any drum safety valve is set to blow, and the *S* value shall not exceed that permitted for the corresponding saturated steam temperature.

(A.2) For steam piping connected to the superheater outlet header up to the first stop valve in each connection, the design pressure, except as otherwise provided in (A.4) below shall be not less than the lowest pressure at which any safety valve on the superheater is set to blow, or not less than 85% of the lowest pressure at which any drum safety valve is set to blow, whichever is greater, and the *S* value for the material used shall not exceed that permitted for the expected steam temperature.

(A.3) For steam piping between the first stop valve and the second valve, when one is required by para. 122.1.7, the design pressure shall be not less than the expected maximum sustained operating pressure or 85% of the lowest pressure at which any drum safety valve is set to blow, whichever is greater, and the *S* value for the material used shall not exceed that permitted for the expected steam temperature.

(A.4) For boilers installed on the unit system (i.e., one boiler and one turbine or other prime mover) and provided with automatic combustion control equipment responsive to steam header pressure, the design pressure for the steam piping shall be not less than the design pressure at the

throttle inlet plus 5%, or not less than 85% of the lowest pressure at which any drum safety valve is set to blow, or not less than the expected maximum sustained operating pressure at any point in the piping system, whichever is greater, and the *S* value for the material used shall not exceed that permitted for the expected steam temperature at the superheater outlet. For forced-flow steam generators with no fixed steam and water line, the design pressure shall also be no less than the expected maximum sustained operating pressure.

(A.5) The design pressure shall not be taken at less than 100 psig [700 kPa (gage)] for any condition of service or material.

122.1.3 Feedwater Piping

(A) The value of *P* to be used in the formulas in para. 104 shall be as follows:

(A.1) For piping from the boiler to and including the required stop valve and the check valve, the minimum value of *P* except as permitted in para. 122.1.3(A.4) shall exceed the maximum allowable working pressure of the boiler by either 25% or 225 psi (1 550 kPa), whichever is the lesser. For an installation with an integral economizer without valves between the boiler and economizer, this paragraph shall apply only to the piping from the economizer inlet header to and including the required stop valve and the check valve.

(A.2) For piping between the required check valve and the globe or regulating valve, when required by para. 122.1.7(B), and including any bypass piping up to the shutoff valves in the bypass, the value of *P* shall be not less than the pressure required to feed the boiler.

(A.3) The value of *P* in the formula shall not be taken at less than 100 psig [700 kPa (gage)] for any condition of service or material, and shall never be less than the pressure required to feed the boiler.

(A.4) In a forced flow steam generator with no fixed steam and water line, the value of *P* for feedwater piping from the boiler to and including the required stop valve may be in accordance with the requirements of para. 122.1.1(B).

(B) The *S* value used, except as permitted in (A.4) above, shall not exceed that permitted for the temperature of saturated steam at the maximum allowable working pressure of the boiler.

(C) The size of the feed piping between the boiler and the first required valve [para. 122.1.7(B)] or the branch feed connection [para. 122.1.7(B.4)] shall, as a minimum, be the same as the boiler connection.

122.1.4 Blowoff and Slowdown Piping. Blowoff and blowdown piping are defined as piping connected to a boiler and provided with valves or cocks through which the water in the boiler may be blown out under pressure. This definition is not intended to apply to (i) drain piping, and (ii) piping such as used on water columns, gage glasses, or feedwater regulators, etc., for the purpose of determining the operating condition of the equipment. Requirements for (i) and (ii) are described in paras. 122.1.5 and 122.1.6. Blowoff systems are operated intermittently to remove accumulated sediment from equipment and/or piping, or to lower boiler water level in a rapid manner. Blowdown systems are primarily operated continuously to control the concentrations of dissolved solids in the boiler water.

(A) Blowoff piping systems from water spaces of a boiler, up to and including the blowoff valves, shall be designed in accordance with (A.1) to (A.4) below. Two shutoff valves are required in the blowoff system; specific valve requirements and exceptions are given in para. 122.1.7(C).

(A.1) The value of *P* to be used in the formulas in para. 104 shall exceed the maximum allowable working pressure of the

boiler by either 25% or 225 psi (1 550 kPa) whichever is less, but shall be not less than 100 psig [690 kPa (gage)].

(A.2) The allowable stress value for the piping materials shall not exceed that permitted for the temperature of saturated steam at the maximum allowable working pressure of the boiler.

(A.3) All pipe shall be steel except as permitted below. Galvanized steel pipe and fittings shall not be used for blowoff piping. When the value of *P* does not exceed 100 psig [690 kPa (gage)], nonferrous pipe may be used and the fittings may be bronze, cast iron, malleable iron, ductile iron, or steel.

CAUTION: Nonferrous alloys and austenitic stainless steels may be sensitive to stress corrosion cracking in certain aqueous environments.

When the value of *P* exceeds 100 psig [690 kPa (gage)], the fittings shall be steel and the thickness of pipe and fittings shall not be less than that of Schedule 80 pipe.

(A.4) The size of blowoff piping shall be not less than the size of the connection on the boiler, and shall be in accordance with the rules contained in the ASME Boiler and Pressure Vessel Code, Section I, PG-59.3, PMB-12, and PEB-12.

(B) The blowdown piping system from the boiler, to and including the shutoff valve, shall be designed in accordance with (B.1) through (B.4) below. Only one shutoff valve is required in the blowdown system.

(B.1) The value of *P* to be used in the formulas in para. 104 shall be not less than the lowest set pressure of any safety valve on the boiler drum.

(B.2) The allowable stress value for the piping materials shall not exceed that permitted for the temperature of saturated steam at the maximum allowable working pressure of the boiler.

(B.3) All pipe shall be steel except as permitted below. Galvanized steel pipe and fittings shall not be used for blowdown piping. When the value of *P* does not exceed 100 psig [690 kPa (gage)], nonferrous pipe may be used and the fittings may be bronze, cast iron, malleable iron, ductile iron, or steel.

CAUTION: Nonferrous alloys and austenitic stainless steels may be sensitive to stress corrosion cracking in certain aqueous environments.

When the value of *P* exceeds 100 psig [690 kPa (gage)], the fittings shall be steel and the thickness of pipe and fittings shall not be less than that of Schedule 80 pipe.

(B.4) The size of blowdown piping shall be not less than the size of the connection on the boiler, and shall be in accordance with the rules contained in the ASME Boiler and Pressure Vessel Code, Section I, PG-59.3, PMB-12, and PEB-12.

(C) The blowoff and blowdown piping beyond the required valves described in (A) and (B) above are classified as nonboiler external piping. The requirements are given in para. 122.2.

122.1.5 Boiler Drains

(A) Complete drainage of the boiler and attached piping shall be provided to the extent necessary to ensure proper operation of the steam supply system. The pipe, fittings, and valves of any drain line shall not be smaller than the drain connection.

(B) If the drain lines are intended to be used both as drains and as blowoffs, then two valves are required and all conditions of paras. 122.1.4, 122.1.7(C), and 122.2 shall be met.

(C) Miniature boilers constructed in accordance with the rules contained in the ASME Boiler and Pressure Vessel Code, Section I, Parts PMB and PEB may use a single valve where drain lines are intended to be used for both blowoff and periodic automatic or manual flushing prior to startup. The single valve shall be designed

for blowoff service but need not have locking capability.

(D) When a drain is intended for use only when the boiler is not under pressure (pressurizing the boiler for rapid drainage is an exception), a single shutoff valve is acceptable under the following conditions: either the valve shall be a type that can be locked in the closed position or a suitable flanged and bolted connection that accepts a blank insert shall be located on the downstream side of the valve. When a single valve is used, it need not be designed for blowoff service. Single valves on miniature boilers constructed in accordance with the rules contained in the ASME Boiler and Pressure Vessel Code, Section I, Parts PMB and PEB do not require locking capability.

(E) Drain piping from the drain connection, including the required valve(s) or the blanked flange connection, shall be designed for the temperature and pressure of the drain connection. The remaining piping shall be designed for the expected maximum temperature and pressure. Static head and possible choked flow conditions shall be considered. In no case shall the design pressure and temperature be less than 100 psig [690 kPa (gage)] and 220°F (105°C), respectively.

122.1.6 Boiler External Piping – Miscellaneous Systems

(A) Materials, design, fabrication, examination, and erection of piping for miscellaneous accessories, such as water level indicators, water columns, gage cocks, and pressure gages, shall be in accordance with the applicable sections of this Code.

(B) The value of *P* to be used in the formulas in para. 104 shall be not less than the maximum allowable working pressure of the boiler except as provided by para. 122.1.1(B).

(C) Valve requirements for water level indicators or water columns, special gage glass and gage cock requirements, minimum line sizes, and special piping configurations required specifically for cleaning, access, or reliability shall be in accordance with PG-60 of Section I of the ASME Boiler and Pressure Vessel Code.

122.1.7 Valves and Fittings. The minimum pressure and temperature rating for all valves and fittings in steam, feedwater, blowoff, and miscellaneous piping shall be equal to the pressure and temperature specified for the connected piping on the side that has the higher pressure, except that in no case shall the pressure be less than 100 psig [690 kPa (gage)], and for pressures not exceeding 100 psig [690 kPa (gage)] in feedwater and blowoff service, the valves and fittings shall be equal at least to the requirements of the ASME standards for Class 125 cast iron or bronze, or Class 150 steel or bronze.

(A) *Steam Stop Valves.* Each boiler discharge outlet, except safety valve or safety relief valve connections, or reheater inlet and outlet connections, shall be fitted with a stop valve located at an accessible point in the steam-delivery line and as near to the boiler nozzle as is convenient and practicable.

(A.1) Boiler stop valves shall provide bidirectional shutoff at design conditions. The valve or valves shall meet the requirements of para. 107. Valves with resilient (nonmetallic) seats shall not be used where the boiler maximum allowable working pressure exceeds 150 psig (1 035 kPa) or where the system design temperature exceeds 366°F (186°C). Valves of the outside screw and yoke, rising stem style are preferred. Valves other than those of the outside screw and yoke, rising stem style shall meet the following additional requirements.

(A.1.A) Each valve shall be equipped with a position indicator to visually indicate

from a distance whether the valve is open or closed.

(A.1.B) Quarter turn valves shall be equipped with a slow operating mechanism to minimize dynamic loadings on the boiler and attached piping. Either a quick-opening manual quarter-turn valve or an automatic solenoid valve may be used on miniature boilers constructed in accordance with the rules contained in the ASME Boiler and Pressure Vessel Code, Section I, Parts PMB and PEB. Manual quarter-turn valves shall be provided with a handle or other position indicator to indicate from a distance whether the valve is open or closed.

(A.2) In the case of a single boiler and prime mover installation, the stop valve required herein may be omitted provided the prime mover throttle valve is equipped with an indicator to show whether it is opened or closed, and it is designed to withstand the required boiler hydrostatic test.

(A.3) When two or more boilers are connected to a common header, or when a single boiler is connected to a header having another steam source, the connection from each boiler having a manhole opening shall be fitted with two stop valves having an ample free-blow drain between them. The preferred arrangement consists of one stop-check valve (located closest to the boiler) and one valve of the style and design described in (A.1) above. Alternatively, both valves may be of the style and design described in (A.1) above.

When a second stop valve is required, it shall have a pressure rating at least equal to that required for the expected steam pressure and temperature at the valve, or a pressure rating at least equal to 85% of the lowest set pressure of any safety valve on the boiler drum at the expected temperature of the steam at the valve, whichever is greater.

(A.4) All valves and fittings on steam lines shall have a pressure rating of at least 100 psig [690 kPa (gage)] in accordance with the applicable ASME standard.

(B) *Feedwater Valves*

(B.1) The feedwater piping for all boilers, except for high temperature water boilers complying with the requirements of (B.8) below, and for forced flow steam generators with no fixed steam and water line complying with the requirements of (B.9) below, shall be provided with a check valve and a stop valve or cock between the check valve and the boiler. The stop valve or cock shall comply with the requirements of (C.5) below.

(B.2) The relative locations of the check and stop (or cock) valves, as required in (B.1) above, may be reversed on a single boiler-turbine unit installation.

(B.3) If a boiler is equipped with a duplicate feed arrangement, each such arrangement shall be equipped as required by these rules.

Fig. 122.1.7(C) Typical Globe Valves

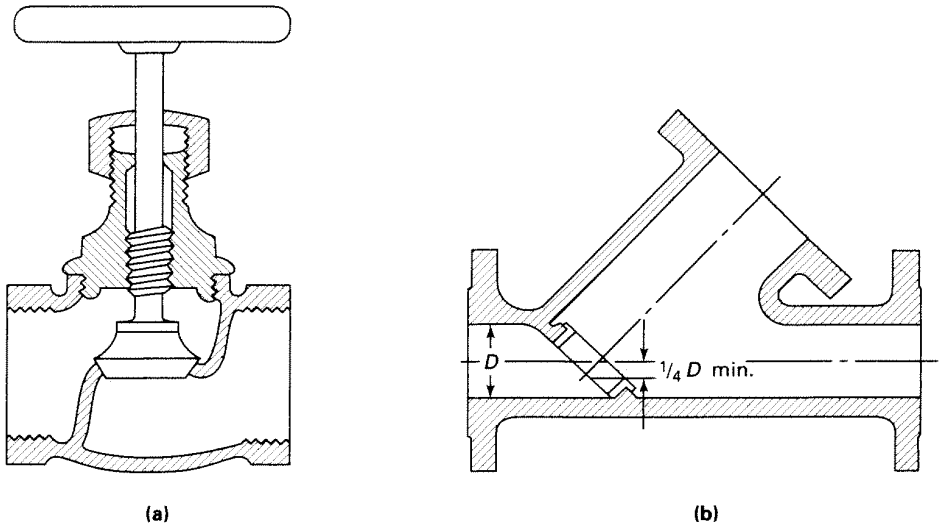

(B.4) When the supply line to a boiler is divided into branch feed connections and all such connections are equipped with stop and check valves, the stop and check valves in the common source may be omitted.

(B.5) When two or more boilers are fed from a common source, there shall also be a globe or regulating valve in the branch to each boiler located between the check valve and the source of supply. A typical arrangement is shown in Fig. 100.1.2(B).

(B.6) A combination stop and check valve in which there is only one seat and disk, and in which a valve stem is provided to close the valve, shall be considered only as a stop valve, and a check valve shall be installed as otherwise provided.

(B.7) Where an economizer or other feedwater heating device is connected directly to the boiler without intervening valves, the feed valves and check valves required shall be placed on the inlet of the economizer or feedwater heating device.

(B.8) The recirculating return line for a high temperature water boiler shall be provided with the same stop valve, or valves, required by (B.1) and (B.3) above. The use of a check valve in the recirculating return line is optional. A check valve shall not be a substitute for a stop valve.

(B.9) The feedwater boiler external piping for a forced flow steam generator with no fixed steam and water line may terminate up to and including the stop valve(s) and omitting the check valve(s) provided that a check valve having a pressure rating no less than the boiler inlet design pressure is installed at the discharge of each boiler feed pump or elsewhere in the feedline between the feed pump and the stop valve(s).

(B.10) Wherever globe valves are used within BEP feedwater piping for either isolation or regulation, the inlet shall be under the disk of the valve.

(C) *Blowoff Valves*

(C.1) Ordinary globe valves as shown in Fig. 122.1.7(C) sketch (a), and other types of valves that have dams or pockets where sediment can collect, shall not be used on blowoff connections.

(C.2) Y-type globe valves as shown in Fig. 122.1.7(C) sketch (b) or angle valves may be used in vertical pipes, or they may be used in horizontal runs of piping provided they are so constructed or installed that the lowest edge of the opening through

the seat is at least 25% of the inside diameter below the centerline of the valve.

(C.3) The blowoff valve or valves, the pipe between them, and the boiler connection shall be of the same size except that a larger pipe for the return of condensate may be used.

(C.4) For all boilers [except electric steam boilers having a normal water content not exceeding 100 gal (380 L), traction-purpose, and portable steam boilers; see (C.11) and (C.12) below] with allowable working pressure in excess of 100 psig [690 kPa (gage)], each bottom blowoff pipe shall have two slow-opening valves, or one quick-opening valve or cock, at the boiler nozzle followed by a slow-opening valve. All valves shall comply with the requirements of (C.5) and (C.6) below.

(C.5) When the value of *P* required by para. 122.1.4(A.1) does not exceed 250 psig [1 725 kPa (gage)], the valves or cocks shall be bronze, cast iron, ductile iron, or steel. The valves or cocks, if of cast iron, shall not exceed NPS 2½ and shall meet the requirements of the applicable ASME standard for Class 250, as given in Table 126.1, and if of bronze, steel, or ductile iron construction, shall meet the requirements of the applicable standards as given in Table 126.1 or para. 124.6.

(C.6) When the value of *P* required by para. 122.1.4(A.1) is higher than 250 psig [1 725 kPa (gage)], the valves or cocks shall be of steel construction equal at least to the requirements of Class 300 of the applicable ASME standard listed in Table 126.1. The minimum pressure rating shall be equal to the value of *P* required by para. 122.1.4(A.1).

(C.7) If a blowoff cock is used, the plug shall be held in place by a guard or gland. The plug shall be distinctly marked in line with the passage.

(C.8) A slow-opening valve is a valve which requires at least five 360 deg turns of the operating mechanism to change from fully closed to fully opened.

(C.9) On a boiler having multiple blowoff pipes, a single master valve may be placed on the common blowoff pipe from the boiler, in which case only one valve on each individual blowoff is required. In such a case, either the master valve or the individual valves or cocks shall be of the slow-opening type.

(C.10) Two independent slow-opening valves, or a slow-opening valve and a quick-opening valve or cock, may be combined in one body and may be used provided the combined fitting is the equivalent of two independent slow-opening valves, or a slow-opening valve and a quick-opening valve or cock, and provided further that the failure of one to operate cannot affect the operation of the other.

(C.11) Only one blowoff valve, which shall be either a slow-opening or quick-opening blowoff valve or a cock, is required on traction and/or portable boilers.

(C.12) Only one blowoff valve, which shall be of a slow-opening type, is required for the blowoff piping for forced circulation and electric steam boilers having a normal water content not exceeding 100 gal (380 L). Electric boilers not exceeding a normal water content of 100 gal (380 L) and a maximum MAWP of 100 psig [690 kPa (gage)] may use a quick-opening manual or slow-opening automatic quarter-turn valve up to NPS 1. Electric boilers not exceeding a normal water content of 100 gal (380 L) but with a MAWP greater than 100 psig [690 kPa (gage)] shall only use either a slow-opening type manual or automatic valve, regardless of size.

(D) *Safety Valves*

(D.1) Safety valves, relief valves, and safety relief valves shall conform to the requirements of PG-67, PG-68, PG-69, PG-70, PG-71, PG-72, and PG-73 of Section I

of the ASME Boiler and Pressure Vessel Code.

Table 122.2 Design Pressure for Blowoff/Blowdown Piping Downstream of BEP Valves

Boiler or Vessel Pressure		Design Pressure [Note (1)]	
MAWP	**kPa (gage)**	**psig**	**kPa (gage)**
Below 250	1 725	Note (2)	Note (2)
250-600	1 725-4 135	250	1 725
601-900	4 136-6 205	400	2 760
901-1,500	6 206-10 340	600	4 135
1,501 and higher	10 341 and higher	900	6 205

NOTES:

(1) The allowable stress value for the piping material need not exceed that permitted for the temperature of saturated steam at the design pressure.

(2) For boiler or vessel pressures below 250 psig [1 725 kPa (gage)], the design pressure shall be determined in accordance with para. 122.1.4(B.1), but need not exceed 250 psig [1 725 kPa (gage)].

122.2 Blowoff and Blowdown Piping in Nonboiler External Piping

Blowoff and blowdown piping systems shall be, where possible, self-draining and without pockets. If unavoidable, valved drains at low points shall allow system draining prior to operation. In order to minimize pipeline shock during the operation of blowoff systems, 3D pipe bends (minimum) should be used in preference to elbows, and wye or lateral fittings should be used in preference to tee connections.

(A) *From Boilers*

(A.1) Blowoff piping, located between the valves described in para. 122.1.4(A) and the blowoff tank or other point where the pressure is reduced approximately to atmospheric pressure and cannot be increased by closing a downstream valve, shall be designed for the appropriate pressure in accordance with Table 122.2. The provisions of paras. 122.1.4(A.3) and 122.1.7 shall apply. The size of non-BEP blowoff header to the safe point of discharge shall not be smaller than the largest connected BEP blowoff terminal [see para. 122.1.4(A.4)].

(A.2) Blowdown piping, in which the pressure cannot be increased by closing a downstream valve, shall be designed for the appropriate pressure and temperature in accordance with Table 122.2. The provisions of para. 122.1.4(B.3) shall apply. The size of non-BEP blowdown piping between the shutoff valve described in para. 122.1.4(B) and the flow control valve shall not be smaller than the BEP boiler shutoff valve [see para. 122.1.4(B.4)] unless engineering calculations confirm that the design flow rate can be achieved with a smaller piping size without flashing the blowdown prior to the flow control valve.

(A.3) When the design pressure of Table 122.2 can be exceeded due to closing of a downstream valve, calculated pressure drop, or other means, the entire blowoff or blowdown piping system shall be designed in accordance with paras. 122.1.4(A) and 122.1.7 for blowoff and para. 122.1.4(B) for blowdown piping.

(A.4) Non-BEP blowdown piping downstream of the flow control valve shall not be smaller - and preferably will be larger - than the connection on the boiler [see para. 122.1.4(B.4)].

(B) From *Pressure Vessels Other Than Boilers*

(B.1) The design pressure and temperature of the blowoff piping from the pressure vessel to and including the blowoff valve(s) shall not be less than the vessel MAWP and corresponding design temperature.

122.3 Instrument, Control, and Sampling Piping

(A) The requirements of this Code, as supplemented by para. 122.3, shall apply to the design of instrument, control, and sampling piping for safe and proper operation of the piping itself.

(B) The term "Instrument Piping" shall apply to all valves, fittings, tubing, and piping used to connect instruments to main piping or to other instruments or apparatus or to measuring equipment as used within the classification of para. 100.1.

(C) The term "Control Piping" shall apply to all valves, fittings, tubing, and piping used to interconnect pneumatically or hydraulically operated control apparatus, also classified in accordance with para. 100.1, as well as to signal transmission systems used to interconnect instrument transmitters and receivers.

(D) The term "Sampling Piping" shall apply to all valves, fittings, tubing, and piping used for the collection of samples, such as steam, water, oil, gas, and chemicals.

(E) Paragraph 122.3 does not apply to tubing used in permanently closed systems, such as fluid-filled temperature responsive devices, or the temperature responsive devices themselves.

(F) Paragraph 122.3 does not apply to the devices, apparatus, measuring, sampling, signaling, transmitting, controlling, receiving, or collecting instruments to which the piping is connected.

122.3.1 Materials and Design. The materials utilized for valves, fittings, tubing, and piping shall meet the particular conditions of service and the requirements of the applicable specifications listed under general paras. 105, 106, 107, and 108 with allowable stresses in accordance with the Allowable Stress Tables in Appendix A.

The materials for pressure retention components used for piping specialties such as meters, traps, and strainers in flammable, combustible, or toxic fluid systems shall in addition conform to the requirements of paras. 122.7 and 122.8.

122.5 Pressure-Reducing Valves

122.5.1 General. Where pressure-reducing valves are used, one or more relief devices or safety valves shall be provided on the low pressure side of the system. Otherwise, the piping and equipment on the low pressure side of the system shall be designed to withstand the upstream design pressure. The relief or safety devices shall be located adjoining or as close as practicable to the reducing valve. The combined relieving capacity provided shall be such that the design pressure of the low pressure system will not be exceeded if the reducing valve fails open.

122.5.2 Bypass Valves. Hand controlled bypass valves having a capacity no greater than the reducing valve may be installed around pressure reducing valves if the downstream piping is protected by relief valves as required in para. 122.5.1 or if the design pressure of the downstream piping system and equipment is at least as high as the upstream pressure.

122.5.3 Design of Valves and Relief Devices. Pressure reducing and bypass valves, and relief devices, shall be designed for inlet pressure and temperature conditions. Safety and relief valves shall be in accordance with the requirements of para. 107.8 of this Code.

122.6 Pressure Relief Piping

Pressure relief piping within the scope of this Code shall be supported to sustain reaction forces, and shall conform to the requirements of paras. 122.6.1 and 122.6.2.

122.6.1 Piping to Pressure-Relieving Safety Devices

(A) There shall be no intervening stop valve(s) between piping being protected and the protective device(s).

(B) Diverter or changeover valves designed to allow servicing of redundant protective devices without system depressurization may be installed between the piping to be protected and the required protective devices under the following conditions:

(B.1) Diverter or changeover valves are prohibited on boiler external piping or reheat piping.

(B.2) One hundred percent (100%) of the required relieving capacity shall be continuously available any time the system is in service.

(B.3) Positive position indicators shall be provided on diverter or changeover valves.

(B.4) Positive locking mechanisms and seals shall be provided on diverter or changeover valves to preclude unauthorized or accidental operation.

(B.5) Diverter or changeover valves shall be designed for the most severe conditions of pressure, temperature, and loading to which they are exposed, and shall be in accordance with para. 107.

(B.6) Provision shall be made to safely bleed off the pressure between the isolated protective device and the diverter or changeover valve.

122.6.2 Discharge Piping From Pressure-Relieving Safety Devices

(A) There shall be no intervening stop valve between the protective device or devices and the point of discharge.

(B) When discharging directly to the atmosphere, discharge shall not impinge on other piping or equipment and shall be directed away from platforms and other areas used by personnel.

(C) It is recommended that individual discharge lines be used, but if two or more reliefs are combined, the discharge piping shall be designed with sufficient flow area to prevent blowout of steam or other fluids. Sectional areas of a discharge pipe shall not be less than the full area of the valve outlets discharging thereinto and the discharge pipe shall be as short and straight as possible and so arranged as to avoid undue stresses on the valve or valves.

(D) Discharge lines from pressure-relieving safety devices within the scope of this Code shall be designed to facilitate drainage.

(E) When the umbrella or drip pan type of connection is used, the discharge piping shall be so designed as to prevent binding due to expansion movements.

(F) Drainage shall be provided to remove water collected above the safety valve seat.

(G) Carbon steel materials listed in Appendix A may be used for discharge piping which is subjected to temperatures above 800°F (427°C) only during operation of pressure relieving safety devices provided that

(G.1) the duration of pressure relieving safety device operation is self-limiting

(G.2) the piping discharges directly to atmosphere

(G.3) the allowable stresses for carbon steel materials at temperatures above 800°F (427°C) shall be taken from Section II, Part D, Table 1A for materials applicable to Section I and Section VIII, Division 1 of the ASME Boiler and Pressure Vessel Code.

Steam "Safety" or Hot Water "Relief" Valve

INSTALLATION REQUIREMENTS FOR BOILERS

Safety or relief valves shall be installed at the top of the boiler with the spindle of the valve in an upright vertical position. The inlet and discharge piping shall be as short and direct as possible. Safety and relief valve set pressure and capacity are determined by data from the manufacturer's nameplate or stamping on the boiler.

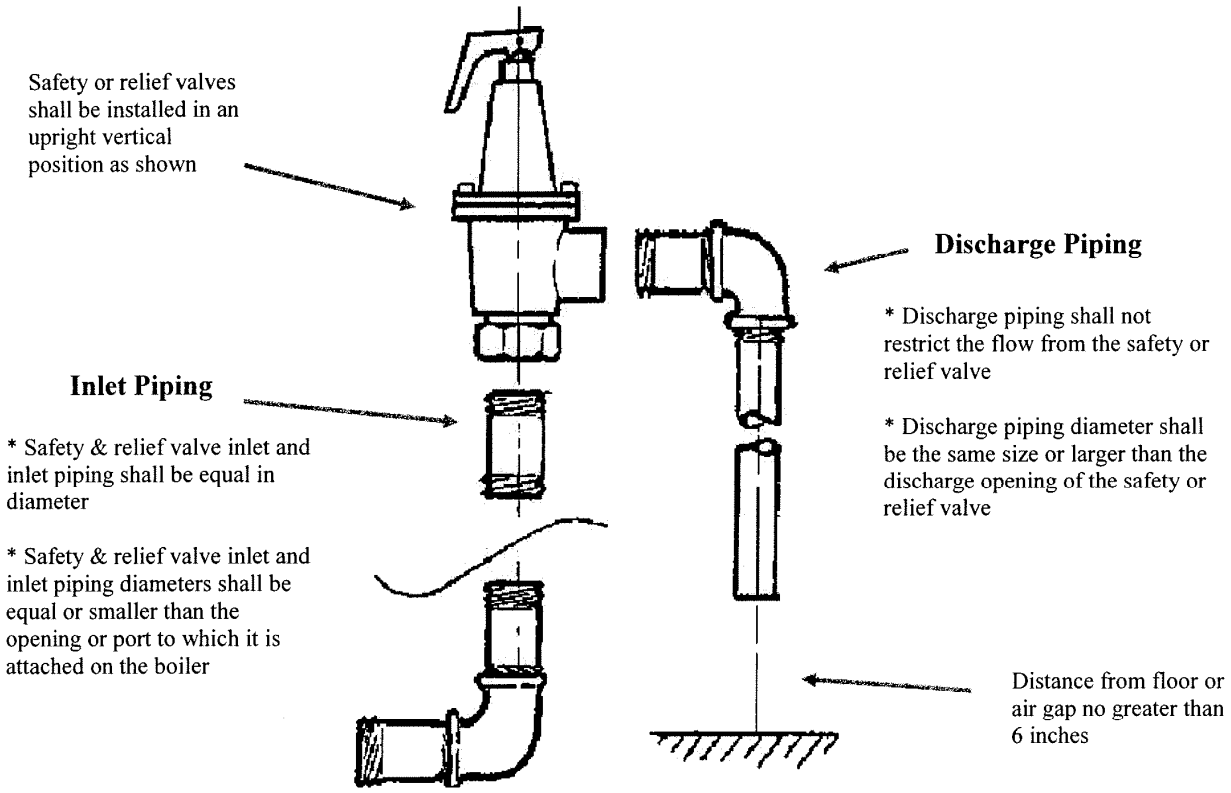

Incorrect Installation

Safety or Relief valves shall not be piped in the horizontal position as shown at right.

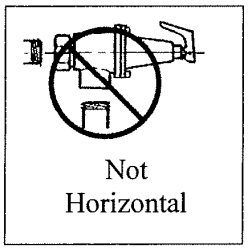

* * * * *

* * * * *

Steam safety and hot water relief valves that are installed on boilers shall be identified with the ASME "V" , "HV" or National Board "VR "symbol.

V HV VR®