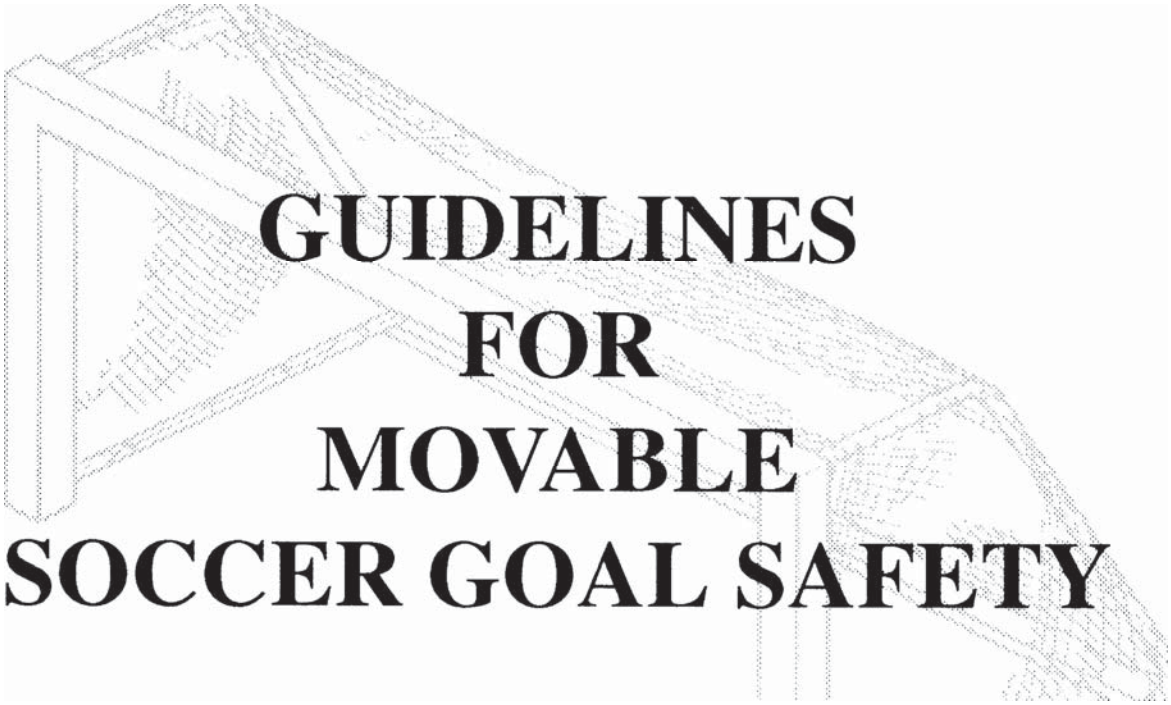

GUIDELINES FOR MOVABLE SOCCER GOAL SAFETY

January 1995
U.S. Consumer Product Safety Commission
Washington, D.C. 20207

CONTENTS

1. Introduction 1

2. Soccer Goal Injuries 1-2

3. Rules of Soccer 2

4. Design/Construction Guidelines 3

5. Anchoring/Securing/Counterweighting Guidelines 4-7

6. Goal Storage Guidelines 7-8

7. Conclusions 8

APPENDICES

Appendix A - List of Soccer Organizations 9

Appendix B - For Further Information.. 9

Appendix C - Warning Labels 10

1. Introduction

This handbook presents guidelines for the installation, use and storage of full-size or nearly full-size movable soccer goals. The U.S. Consumer Product Safety Commission (CPSC) believes these guidelines can help prevent deaths and serious injuries resulting from soccer goal tipover. Publication of the handbook is intended to promote greater safety awareness among those who purchase, install, use, and maintain movable soccer goals.

These guidelines are intended for use by parks and recreation personnel, school officials, sports equipment purchasers, parents, coaches, and any other members of the general public concerned with soccer goal safety.

These guidelines are intended to address the risk of movable soccer goal tipover. They are not a CPSC standard, nor are they mandatory requirements. Therefore, the Commission does not endorse them as the sole method to minimize injuries associated with soccer goals.

2. Soccer Goal Injuries and Deaths

According to the 1994 National Soccer Participation Survey (Soccer Industry Council of America), over 16 million persons in the United States play soccer at least once a year. Seventy-four percent (over 12 million) of these persons are under the age of 18. Soccer ranks fourth in participation for those under 18, following basketball, volleyball, and softball and well ahead of baseball, which has an annual participation of 9.7 million.

There are approximately 225,000 to 500,000" soccer goals in the United States. Many of these soccer goals are unsafe because they are unstable and are either unanchored or not properly anchored or counter-balanced. These movable soccer goals pose an unnecessary risk of tipover to children who climb on goals (or nets) or hang from the crossbar.

The CPSC knows of four deaths in 1990 alone and At least 21 deaths during the past 16 years (1979-1994) associated with movable soccer goals. ln addition, an estimated 120 injuries involving falling goals were treated each year in U.S. hospital emergency rooms during the period 1989 through 1993. Many of the serious incidents occurred when the soccer goals tipped over onto the victim. Almost all of the goals involved in these tipovers appeared to be **"home-made"** by high school shop classes, custodial members, or local welders, not professionally manufactured. These **"home-made"** goals are often very heavy and unstable.

The majority of movable soccer goals are constructed of metal, typically weighing 150-500" pounds. The serious injuries and deaths are a result of blunt force trauma to the head, neck, chest, and limbs of the victims. In most cases this occurred when the goal tipped or was accidentally tipped onto the victim. In one case an 8-year-old child was fatally injured when the movable soccer goal he was climbing tipped over and struck him on the head. In another case, a 20-year-old male died from a massive head trauma when he pulled a goal down on himself while attempting to do

chin-ups. In a third case, while attempting to tighten a net to its goal post, the victim's father lifted the back base of the goal causing it to tip over striking his 3-year-old child on the head, causing a fatal injury.

High winds can also cause movable soccer goals to fall over. For example, a 9-year-old was fatally injured when a goal was tipped over by a gust of wind. In another incident, a 19-year-old goalie suffered stress fractures to both legs when the soccer goal was blown on top of her.

3. Rules of Soccer

From the Federation of International De Football Associations' (FIFA) *Laws of the Game, Guide for Referees, July 1993.*

> "Goal-posts and cross-bars must be made of wood, metal, or other approved material as decided from time to time by the International Football Association Board. They maybe square, rectangular, round. half round, or elliptical in shape."
>
> "Goal-posts and cross-bars made of other materials and in other shapes are not permitted. The goal-posts must be white in color."
>
> "The width and depth of the cross-bar shall not exceed 5 inches(12 cm)."

From the National Federation of State High School Associations' (NFSHSA) 1994-95 *National Federation Edition-Soccer Rules Book.*

> "They shall consist of 2 upright (posts) 4 inches but not more than 5 inches (0.10m by 0. 12m)...the tops of the posts shall be joined by a 4 inches but not more than 5 inches (0. 10m by 0.12m) horizontal crossbar..."

From the National Collegiate Athletic Associations' (NCAA) *Rules for Soccer.*

> "...and shall consist of two wooden or metal posts, . . .the width or diameter of the goal-posts and crossbar shall not be less than 4 inches (10.16 cm) nor more than 5 inches (12.7 cm)."

4. Design/Construction Guidelines

While a movable soccer goal appears to be a simple structure, a correctly designed goal is carefully constructed with counterbalancing measures incorporated into the product. The common dimensions of a full-size goal are approximately 7.3 m (24 ft.) in width by 2.4 m (8 ft.) in height and 1.8 m (6 ft.) in depth (see Figure 1). The stability of a soccer goal depends on several factors. One effective design alternative uses a counterbalancing strategy by lengthening the overall depth of the goal to effectively place more weight further from the goal's front posts (more weight at the back of the goal). A second design selects lightweight materials for the goal's front posts and crossbar and provides much heavier materials for the rear ground bar and frame members. This tends to counterbalance the forces working to tip the goal forward. Another design uses a heavy rear framework and folds flat when not in use, making the goal much less likely to tip over. Finally, after these various designs are considered, it is imperative that ALL movable soccer goals be anchored firmly in place at all times (see section 5).

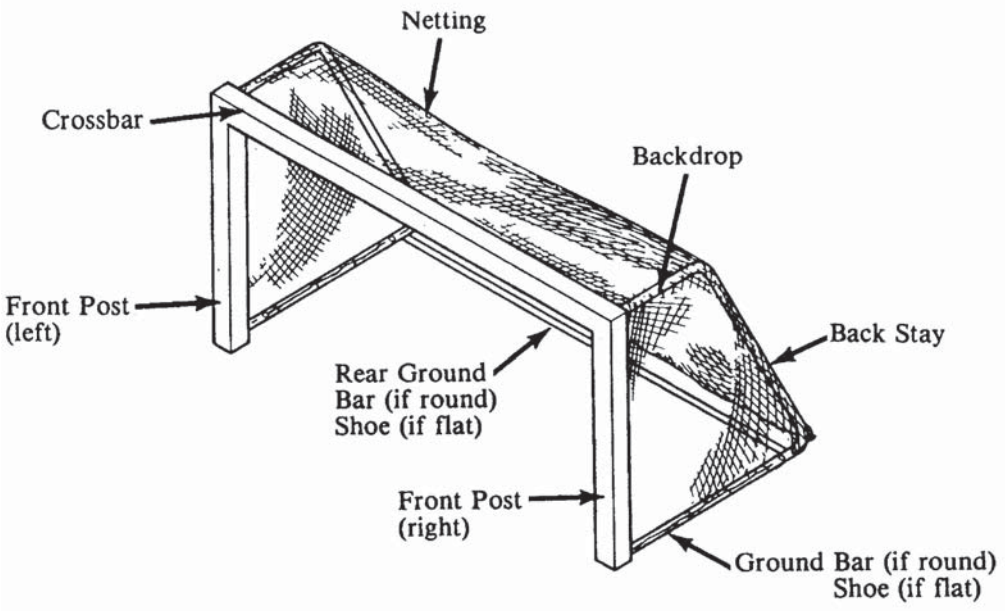

Figure 1: Components of a Movable Soccer Goal

5. Anchoring/Securing/Counterweighting Guidelines

A properly anchored/counterweighted movable soccer goal is much less likely to tip over. Remember to secure the goal to the ground (preferably at the rear of the goal), making sure the anchors are flush with the ground and clearly visible. It is IMPERATIVE that ALL movable soccer goals are always anchored properly (see Figure 2). There are several different ways to secure your soccer goal. The number and type of anchors to be used will depend on a number of factors, such as soil type, soil moisture content, and total goal weight.

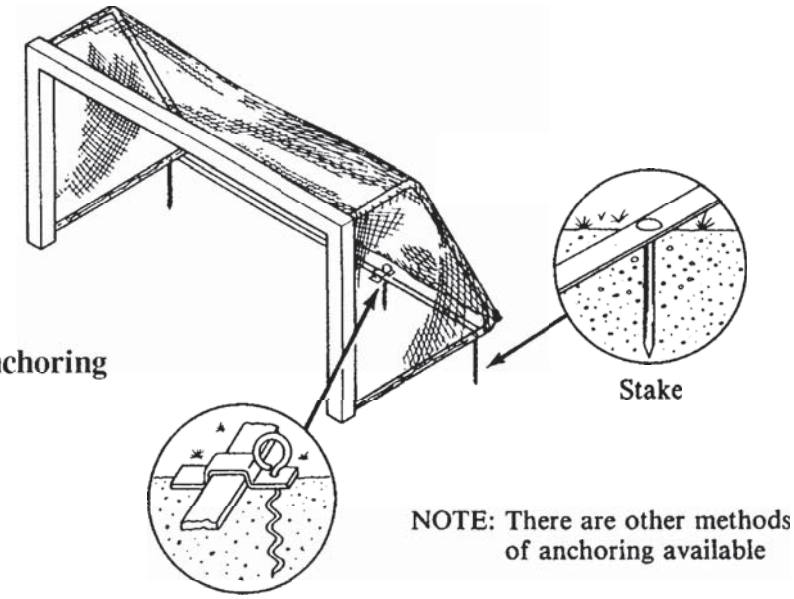

Figure 2: Goal Anchoring

Anchor Types

- **Auger style**

This style anchor is “helical” shaped and is screwed into the ground. A flange is positioned over the ground shoes (bar) and rear ground shoe (bar) to secure them to the ground. A minimum of two auger-style anchors (one on each side of the goal) are recommended. More may be required, depending on the manufacturer’s specifications, the weight of the goal, and soil conditions.

Figure 3.1: Auger Style Anchor

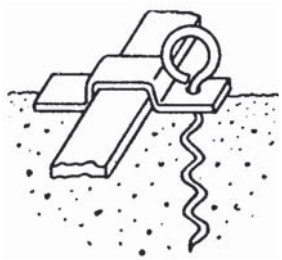

- **Semipermanent**

This anchor type is usually comprised of two or more functional components. The main support requires a permanently secured base that is buried underground. One type (3.2a) of semipermanent anchor connects the underground base to the soccer goal by means of 2 tethers. Another design (3.2b) utilizes a buried anchor tube with a threaded opening at ground level. The goal is positioned over the buried tube and the bolt is passed through the goal ground shoes (bar) and rear ground shoe (bar) and screwed into the threaded hole of the buried tube.

Figure 3.2a: Semipermanent Anchor

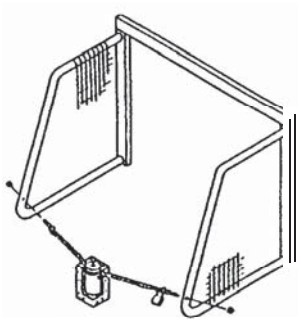

Figure 3.2b: Semipermanent Anchor

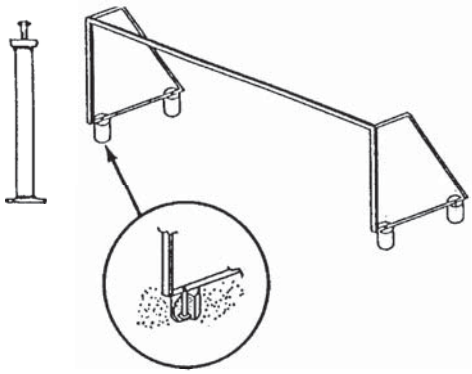

- **Peg or Stake style (varying lengths)**

Typically two to four pegs or stakes are used per goal (more for heavier goals) (Figure 3.3). The normal length of a peg or stake is approximately 10 inches (250mm). Care should be taken when installing pegs or stakes. Pegs or stakes should be driven into the ground with a sledge-hammer as far as possible and at an angle if possible, through available holes in the ground shoes (bar) and rear ground shoe (bar) to secure them to the ground. If the peg or stake is not flush with the ground, it should be clearly visible to persons playing near the soccer goal. Stakes with larger diameters or textured surfaces have greater holding capacity.

Figure 3.3: Peg or Stake Style Anchor

• J-Hook Shaped Stake style

This style is used when holes are not pre-drilled into the ground shoes (bars) or rear ground shoe (bar) of the goal. Similar to the peg or stake style, this anchor is hammered, at an angle if possible, directly into the earth. The curved (top) position of this anchor fits over the goal member to secure it to the ground (Figure 3.4). Typically, two to four stakes of this type are recommended (per goal), depending on stake structure, manufacturers specifications, weight of goal, and soil conditions. Stakes with larger diameters or textured surfaces have greater holding capacity.

Figure 3.4: J-Hook Anchor

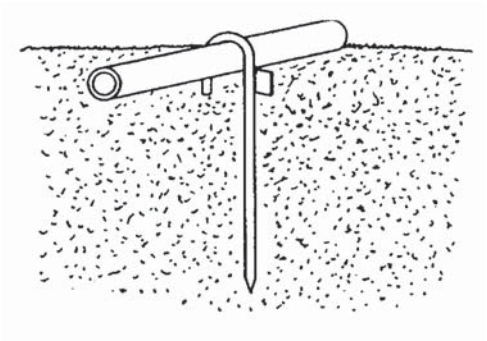

• Sandbags/Counterweights

Sandbags or other counterweights could be an effective alternative on hard surfaces, such as artificial turf, where the surface can not be penetrated by a conventional anchor (i. e., an indoor practice facility) (Figure 3.5). The number of bags or weights needed will vary and must be adequate for the size and total weight of the goal being supported.

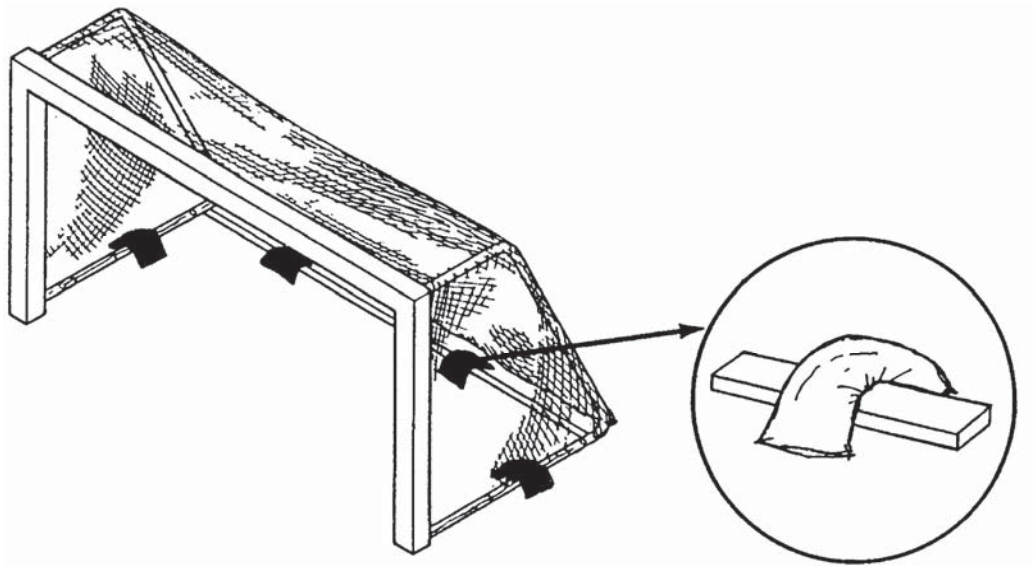

Figure 3.5: Sandbag Method of Anchoring

● **Net Pegs**

These tapered, metal stakes should be used to secure only the NET to the ground (Figure 3.6). Net pegs should NOT be used to anchor the movable soccer goal.

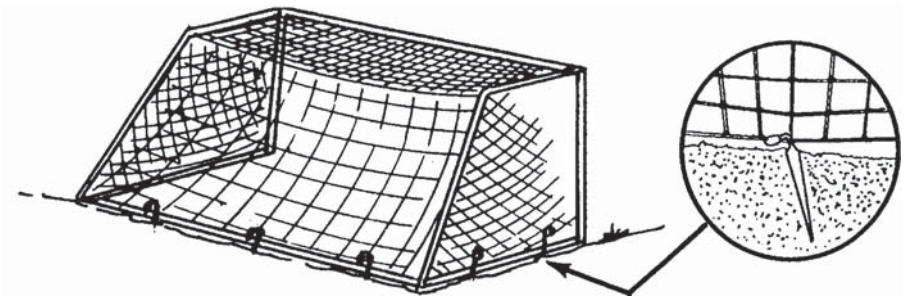

Net pegs should **never** be used to anchor a soccer goal

Figure 3.6: Net Pegs

6. Guidelines for Goal Storage or Securing When Goal is Not in Use

The majority of the incidents investigated by CPSC did not occur during a soccer match. Most of the incidents occurred when the goals were unattended. Therefore, it is imperative that all goals are stored properly when not being used. When goals are not being used always:

a) Remove the net,

b) Take appropriate steps to secure goals such as:

1) Place the goal frames face to face and secure them at each goalpost with a lock and chain (see Figure 4.1),

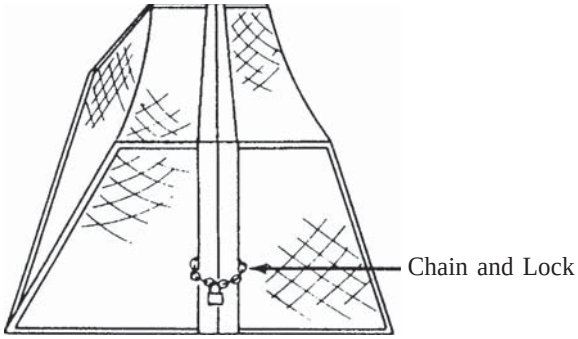

Figure 4.1: Join Goal Faces and Lock Together Using Chain and Lock

2) Lock and chain to a suitable fixed structure such as a permanent fence (see Figure 4.2),

3) Lock unused goals in a secure storage room after each use,

4) If applicable, fully disassemble the goals for seasonal storage, or

5) If applicable, fold the face of the goal down and lock it to its base.

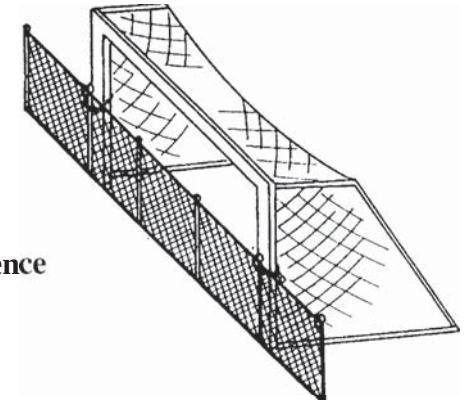

Figure 4.2: Attach Goal Face to Permanent Fence with a Chain Lock

7. Conclusions/Safety Tips

- Securely anchor or counterweight movable soccer goals at ALL times (see prior illustration).
- Anchor or chain one goal to another, to itself in a folded down position, or to nearby fence posts, dugouts, or any other similar sturdy fixture when not in use. If this is not practical, store movable soccer goals in a place where children cannot have access to them.
- Remove nets when goals are not in use.
- Check for structural integrity and proper connecting hardware before every use. Replace damaged or missing parts or fasteners immediately.
- NEVER allow anyone to climb on the net or goal framework.
- Ensure safety/warning labels (see Appendix C) are clearly visible (placed under the crossbar and on the sides of the down-posts at eye level).
- Fully disassemble goals for seasonal storage.
- Always exercise extreme caution when moving goals and allow adequate manpower to move goals of varied sizes and weights. Movable soccer goals should only be moved by authorized and trained personnel.
- Always instruct players on the safe handling of and potential dangers associated with movable soccer goals.
- Movable soccer goals should only be used on LEVEL (flat) fields.

Appendix A. List of Soccer Organizations

Federation of International De Football Association
Hitzigweg 11,8030
Zurich, Switzerland
Telephone 41-1-384-9595

National Federation of State High School Associations
11724 NW Plaza Circle
Box 20626
Kansas City, Missouri 64195-0626
Telephone (816) 464-5400

National Collegiate Athletic Association
6201 College Blvd
Overland Park, Kansas 66211-2422
Telephone (91 3) 339-1906

APPENDIX B. For Further Information

For further information on soccer goal anchors and/or to obtain **FREE** soccer goal warning labels (see Appendix C), safety alerts/bulletins and additional copies of this document, please contact:

The Coalition to Promote Soccer Goal Safety
c/o Soccer Industry Council of America
200 Castlewood Dr.
North Plain Beach, FL 33408
or call any of these Coalition members:
800-527-7510
800-334-4625
800-243-0533
800-531-4252

or write: U.S. Consumer Product Safety Commission
Washington, D.C. 20207

To report a dangerous product or a product-related injury, call CPSC'S toll-free hotline at (800) 638-2772 or CPSC'S teletypewriter at (301) 595-7054. Consumers can get recall information via Internet gopher services at cpsc.gov or report product hazards to info@cpsc.gov.

This document is in the public domain. It may bc reproduced in part or in whole by an mdlvidual or organization without perrnisslon. If it is reproduced, however, the Commission would appreciate knowing how it is used. Write the U.S. Consumer Product Safety Commission, Office of Information and Public Affairs, Washington, D.C. 20207."

The U.S. Consumer Product Safety Commission (CPSC) is an independent regulatory agency charged with reducing unreasonable risks of injury associated with consumer products.

Appendix C. Warning Labels

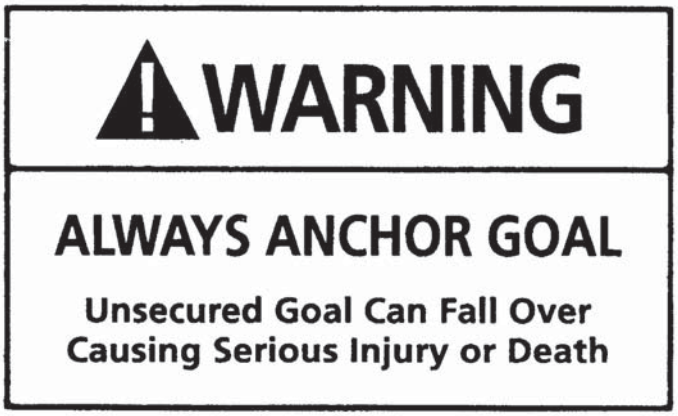

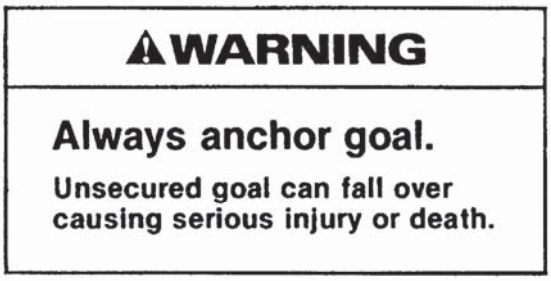

U.S. Government Printing Office 1995 -390-080 (20491)