commerce.wi.gov
Wisconsin
Department of Commerce

Safety & Buildings Division
201 West Washington Avenue
P.O. Box 2658
Madison, WI 53701-2658

Evaluation # 200511-W Revised (Replaces 200411-W)

Wisconsin
Building Product Evaluation

Material: LPI and TLI Series Wood I-joists

Manufacturers:

Louisiana-Pacific Corporation
11500 Reading and Tyler Rd.
Red Bluff, CA 96080

Louisiana-Pacific Corporation
2706 HWY 421 North
Wilmington, NC 28401

Louisiana-Pacific Corporation
900 Chemin du lac Hippolyte
Larouche, PQ
Canada G0W 1Z0

SCOPE OF EVALUATION

GENERAL: This report evaluates the use of LPI and TLI Series Wood I-Joists, manufactured by Louisiana-Pacific Corporation (LP), for use as structural framing lumber (engineered and the fire-resistive design requirements).

The **Comm** requirements below in accordance with the current **Wisconsin Uniform Dwelling Code for 1 & 2 family dwellings:**

- **Structural:** The I-Joists were evaluated for use in dry locations, not limited to floor and roof joists in accordance with **ss. Comm 21.02 (3)(a)** and **Comm 21.19**.

The **IBC** requirements below in accordance with the **Wisconsin Amended ICC Code:**

- **Structural:** The I-Joists were evaluated for use in dry locations, not limited to floor and roof joists in accordance with **ss. IBC 2301.2**, **2301.2.1**, **2303.1**, **2303.1.2**, and **2306.1.**
- **Fire-Resistive Assembly:** The I-Joists were evaluated for use as a component of a one-hour and two-hour fire-resistive rated assembly in accordance with **ss. IBC 702.1**, **703.1**, **703.2**, **703.3**, **710.1** and **Table 719.1(3)**, **Item 21-1.1**.

DESCRIPTION AND USE

The evaluated I-Joists are used in residential and light commercial construction as, but are not limited to, floor joists, roof joists, blocking panels and rim joists. The I-Joists have solid-sawn lumber or structural composite lumber (SCL) flanges and a single web as specified in the approved Quality Control Manual (herein referred to as the Manual) that contains the manufacturing standards. Web sections are end-jointed forming a continuous web. Web end joints shall be of the types specified in the Manual. The web-flange connection is made by inserting the beveled edge of the web into a groove centered in the wide face of the flange member.

The manufacturing tolerances of the I-joists shall be as specified in the Manual.

Materials:

1. **Flanges:** The flange material is solid-sawn lumber or SCL meeting the requirements in the Manual.
2. **Webs:** Webs for all series, except for the LPI 56A and LPI 550 Series I-joists, shall be at least 3/8 inches (9.5 mm) thick. Webs for the LPI 56A and LPI 550 Series I-joists shall be at least 7/16 inches (11.1 mm) thick. All web panels shall comply with U.S. Voluntary Product Standard PS 2-92 and the Manual.
3. **Adhesive:** Adhesives are exterior wet-use types complying with ASTM D2559 and shall be of the types specified in the Manual.

Design: LPI and TLI Series I-Joists must be designed in accordance with Tables 1 to 15 of this evaluation. The following conditions also apply:

1. I-joists shall be designed for appropriate loads and deflection limitations based upon the **Wisconsin Uniform Dwelling Code for 1 & 2 family dwellings** and the **Wisconsin Amended ICC Code**. The cumulative effects of short-term loads, such as snow, shall be considered in determining the duration of load. For snow load, no greater duration of load factor than 1.15 shall be used.
2. Web stiffeners are optional when the I-joists are designed in accordance with Tables 1 to 15, except when any of the following conditions are encountered:

   a. Bird's mouth cuts. See Figure 9, Detail 6.
   b. Where sloped joist hangers support I-joists.
   c. Where joist hangers do not laterally support the I-joist's top flange.
   d. When required by Tables 1 to 4 due to actual reaction loads.

3. The tabulated maximum resistive moments given in Tables 1 and 2 for I-joists shall **not** be increased by any code allowed repetitive member use factor. The tabulated maximum resistive moments given in Tables 3 and 4 for I-joist repetitive members, as defined in Part 7.3.6 of the AF&PA NDS-97, are allowed to be increased by 4 percent for SCL flanges, and 7 percent for solid-sawn flanges.
4. An analytical approach for the location and size of I-joist web holes, including use of the LP design software, can be used in lieu of the web hole chart tables or web hole equations noted in this evaluation, provided the web hole calculations are reviewed and approved by a professional engineer. Size and location of allowable web holes are noted in Tables 7 to 10 for the LPI Series I-Joists, and Tables 11 to 13 for the TLI Series I-joists described in this report. Web hole equations are noted in Table 6 for LPI Series I-Joists and Table 14 for TLI Series I-Joists. If the engineer uses the LP design software for web hole design, the engineer must provide proper reference to the software. See **LIMITATIONS OF APPROVAL** section for additional details. Figures 2 and 3 show the web hole drawings.
5. Equivalent specific gravity for fastener design shall be 0.42 for the solid-sawn wood flanges. The spacing of fasteners installed in the solid-sawn wood flanges shall comply with the spacing set forth in the applicable code for fasteners installed in sawn lumber. Equivalent specific gravity for fastener design and the spacing of fasteners installed in the SCL flanges shall comply with evaluation report number 200603-W.

Installation: LPI and TLI Series I-Joists are installed using details shown in Figures 1 to 12 of this evaluation report.

- The compression flange requires continuous lateral support, and the joist ends require restraint to prevent rollover. Methods specified in the applicable code for lateral support of sawn lumber are acceptable.
- Sheathing attachment to the I-joist flanges shall meet the requirements of #5 above of this evaluation report.
- I-joist attachment to supports shall meet the requirements of #5 above of this evaluation report.
- Bridging may be omitted in floor and roof joist applications. Bracing is required during construction in accordance with the manufacturer's installation instructions.

- The material, size, and attachment of web reinforcement shall be as illustrated and described in Figure 1 and Table 5 of this evaluation report.
- Details are directed towards proper installation of all LPI and TLI wood I-joists. Other considerations, such as diaphragm connections, nailing and load transfers, require supplementary consideration by a registered engineer or architect.

LPI and TLI Joist Rim Board Applications: The LPI and TLI I-joists are recognized for use as rim boards as shown in Figure 5, Detail 2. For the purpose of this evaluation report, rim boards are defined as continuously supported structural members, either located at the joist elevation in an end bearing wall or located parallel to the joist framing, that are the full depth of the joist space and are used for any of the following purposes:

- Transfer, from above to below, of all vertical loads at the rim board location. Allowable vertical loads are noted in Table 15.
- Transferring in-plane lateral loads of a maximum of 200 pounds of force per linear foot (2920 N/m) from the diaphragm to the wall plate below. See Figure 5 for shear transfer details.
- Providing diaphragm attachment (sheathing to the top edge of rim board).
- Providing lateral support to the joist or rafter (resistance against rotation) through attachment to the joist or rafter.
- Providing closure for ends of joists or rafters.
- Providing attachment base for siding or exterior deck ledger.
- I-joists used as blocking panels are installed between I-joists and have a maximum applicable vertical capacity as shown in Table 15 of this report.

Identification: LPI and TLI Series I-Joists shall be identified with markings noting the manufacturer's name and/or trademark, plant number, product designation, evaluation report number (200511-W) and third-party inspection agency name and/or trademark as required by **ss. Comm 20.18 or 61.60** of the current UDC and Wisconsin Commercial Code, respectively.

TESTS AND RESULTS

LPI and TLI I-joists have been subjected to structural load testing. Signed and sealed analysis of the qualification test data has been submitted and is on file with the department. Allowable design values for LPI I-joists are listed in Table Nos. 1 and 2. Allowable design values for TLI I-joists are listed in Tables Nos. 3 and 4.

Minimum bearing lengths and stiffener requirements for the LPI I-joists are listed in Table Nos. 1, 2 and 5. Figure 1 specifies further details concerning LPI I-joist stiffener construction. Minimum bearing lengths and stiffener requirements for TLI I-joists are listed in Table Nos. 3 through 5. Figure 1 specifies further details concerning TLI I-joist stiffener construction.

Circular and rectangular web openings for LPI I-joists are allowed when they meet the requirements of Table Nos. 7 through 10. Circular and rectangular web openings for TLI I-joists are allowed when they meet the requirements of Table Nos. 11 through 13. Web hole equations are noted in Table 6 for LPI I-joists and Table 14 for TLI I-joists. **FLANGES SHALL NOT BE CUT.**

LIMITATIONS OF APPROVAL

That the LPI and TLI Series I-Joists described in this evaluation report comply with the codes listed under the **SCOPE OF EVALUATION** section of this report, subject to the following conditions:

- The I-joists are designed in accordance with this report. Details provided in Figures 1 through 12 and Tables 1 through 15 of this report must be confirmed for applicability for each project, as required by the building official. Engineering calculations may be required. The following items should be considered when submitting calculations to the building official: lateral support, vertical support, connections (including selection of joist hangers), lateral force resistance, location and size of web holes and applied loads and spans.
- Deflections are limited as set forth in the applicable code, using the design properties given in Table 1 to 4.
- Where a one-hour or two-hour fire-resistance rating is required, construction shall comply with Figure 10, 11 or 12 of this report, and **ss. IBC 702.1**, **703.1**, **703.2**, **703.3**, **710.1** and **Table 719.1(3)**, **Item 21-1.1**.

- The I-joists must be installed in accordance with this evaluation report and the manufacturer's installation details. Installation details may require supplementary considerations. Descriptive literature indicating joist composition,

dimensions, installation details including locations and details of blocking, bridging, I-joist cuts and this evaluation report must be furnished upon request to code authorities having jurisdiction.

Floor and roof load tables may be used without submittal of calculations provided that the following information is shown on the plans submitted for each project:

- Building product evaluation number 200511-W, product designation, spans, spacing, loading conditions, bearing details, and other information when required by **ss. Comm 20.18 or 61.60** of the current **UDC** and **Wisconsin Commercial Code**, respectively.
- Span and load tables are based on simple and multiple span uniformly distributed load conditions for both floors and roofs. Any variation will require submittal of calculations without the use of the load tables for that portion of the project when required by **ss. Comm 20.18 or 61.60.** Further, applications not covered by this building product evaluation report and requiring special consideration may be handled by contacting Louisiana-Pacific Corporation's Engineered Wood Products Technical Support Services staff for guidance.
- The I-joists are manufactured under an approved quality control program with inspections by APA-The Engineered Wood Association at Louisiana-Pacific Corporation Engineered Wood Products facilities in Wilmington, North Carolina and Red Bluff, California.
- When the design of the I-joists assumes composite action, the floor system shall be installed as described in NER-108 for Sturd-I-Floor or APA-rated sheathing for field glued panels.
- The I-joists are not approved for use where hourly rated construction is required by the Wisconsin Building Codes, unless part of a listed assembly.

This approval will be valid through December 31, 2010, unless manufacturing modifications are made to the product or a re-examination is deemed necessary by the department. The product approval is applicable to projects approved under the current edition of the applicable codes. This approval may be void for project approvals made under future applicable editions. The Wisconsin Building Product Evaluation number must be provided when plans that include this product are submitted for review.

DISCLAIMER

The department is in no way endorsing or advertising this product. This approval addresses only the specified applications for the product and does not waive any code requirement not specified in this document.

Revision Date: July 24, 2006
Approval Date: August 11, 2005 By: _____

Lee Finley, Jr.
Product & Material Review
Integrated Services Bureau

200511-W.doc

Table 1. Design Values of I-Joists

JOIST SERIES	JOIST DEPTH (in.)	MOMENT (lbs-ft)	EI x 10^6 (lbs-in^2)	K x 10^6 (ft-lbs/in)	SHEAR[3] 3.5" MINIMUM BEARING LENGTH (lbs)	END REACTION 1.75" MINIMUM BEARING LENGTH (lbs)		INTERIOR REACTION 3.5" MINIMUM BEARING LENGTH (lbs.)	
						W/O W.S.	W/ W.S.	W/O W.S.	W/ W.S.
LPI 100	9.5	2615	124	0.448	1125	945	NA	1900	NA
	11.875	3385	216	0.544	1425				
LPI 125	9.5	2755	142	0.448	1125				
	11.875	3565	248	0.544	1425				
LPI 150	9.5	3040	162	0.448	1125				
	11.875	3930	287	0.544	1425				
LPI 200	9.5	2865	142	0.438	1125	1020	NA	2050	2400
	11.875	3840	248	0.549	1425		1150		
	14	4720	371	0.658	1725		1150		
	16	5550	514	0.746	1980		1150		
LPI 225	9.5	3025	162	0.438	1125		NA		
	11.875	4050	287	0.549	1425		1150		
	14	4975	431	0.658	1725		1150		
	16	5850	597	0.746	1980		1150		
LPI 250	9.5	3575	187	0.438	1125		NA		
	11.875	4630	328	0.549	1425		1150		
	14	5570	495	0.658	1725		1150		
	16	6460	691	0.746	1980		1150		
LPI 300	9.5	3795	185	0.423	1225	1200	1225	2350	2700
	11.875	5075	318	0.570	1425		1510		
	14	6235	474	0.671	1725		1510		
	16	7335	652	0.761	1980		1510		
LPI 325	9.5	4340	214	0.423	1225		1225		
	11.875	5620	370	0.570	1425		1510		
	14	6770	550	0.671	1725		1510		
	16	7845	758	0.761	1980		1510		
LPI 350	11.875	5620	417	0.570	1425		1510		
	14	6770	627	0.670	1725		1510		
	16	7845	869	0.761	1980		1510		
LPI 550	11.875	8625	610	0.569	1940	1400	1840	3400	3850
	14	10385	907	0.665	2150		1840		
	16	12040	1220	0.756	2350		1840		

For **SI** Units**:** 1 inch = 25.4 mm, 1 plf = 14.6 N/m, 1 ft-lb = 1.36 N-m, 1 lb = 4.45 N, 1 in^2-lb = 0.00287 N-m^2

NOTES:

1. The design values are for normal duration of load and may be adjusted in accordance with the applicable code. Moment capacity shall **not** be increased by any code allowed repetitive member use factor.
2. Shear capacity represents I-joists having web stiffeners, except for depths less than 11-7/8 inches.
3. W/ W.S. is With Web Stiffeners and W/O W.S. is Without Web Stiffeners.
4. The allowable design values shall apply to product installation conditions of use that are dry, well ventilated and covered. Dry conditions are product installation conditions where ambient moisture content is 16% or less.
5. When calculating deflection, both bending and shear deformation shall be determined using the following formulas:

   Example 1 – Formula for uniform load on a simple span joist:

$$\Delta = \frac{22.5wL^4}{EI} + \frac{wL^2}{K}$$

   Example 2 – Formula for concentrated load on a simple span joist:

$$\Delta = \frac{36PL^3}{EI} + \frac{2PL}{K}$$

   where:

   Δ= deflection (in.).
   w= uniform load in pounds per lineal foot (plf).
   L = design span (ft).
   K= shear deformation coefficient (ft-lbs/in.).
   EI= stiffness in lbs-in^2.
   P = concentrated load (lbs).

Table 2. Design Values of I-Joists (Cont'd)

JOIST SERIES	JOIST DEPTH (in)	MOMENT (lbs.-ft)	EI x 10^6 (lbs-in^2)	K x 10^6 (ft-lbs./in)	SHEAR[3] 3.5" MINIMUM BEARING LENGTH (lbs.)	END REACTION (MINIMUM BEARING LENGTH) (lbs.)		INTERIOR REACTION 3.5" MINIMUM BEARING LENGTH (lbs.)	
						W/O W.S.	W/ W.S.	W/O W.S.	W/ W.S.
LPI 26	9.250	3150	135	0.353	960	945 (1.75")	945 (1.75")	2200	2600
	9.500	3250	152	0.368	1125				
	11.250	3955	226	0.424	1185				
	11.875	4205	256	0.447	1425				
LPI 26A	9.250	3150	160	0.353	960				
	9.500	3250	165	0.368	1125				
	11.875	4205	286	0.447	1425				
LPI 30	9.500	3825	178	0.357	1125	1020 (1.75")	1020 (1.75")	2200	2800
	11.875	4950	298	0.451	1425	1020 (1.75")	1150 (1.75")		
	14.000	5960	432	0.541	1725	1020 (1.75")	1150 (1.75")		
	16.000	6910	581	0.613	1980	1020 (1.75")	1150 (1.75")		
LPI 30A	9.500	3825	199	0.357	1125	1020 (1.75")	1020 (1.75")		
	11.875	4950	334	0.451	1425	1020 (1.75")	1150 (1.75")		
	14.000	5960	484	0.541	1725	1020 (1.75")	1150 (1.75")		
	16.000	6910	650	0.613	1980	1020 (1.75")	1150 (1.75")		
LPI 36	11.875	6445	384	0.468	1615	1200 (1.75")	1510 (1.75")	2800	3500
	14.000	7755	556	0.550	1830	1200 (1.75")	1510 (1.75")		
	16.000	8995	747	0.625	2020	1200 (1.75")	1510 (1.75")		
	18.000	10135	967	0.700	2185	1200 (2.50")	1799 (2.50")		
	20.000	11270	1215	0.774	2320	1200 (2.50")	1857 (2.50")		
	22.000	12390	1491	0.850	2435	1200 (2.50")	1906 (2.50")		
	24.000	13505	1796	0.922	2525	1200 (2.50")	1945 (2.50")		
LPI 36A	11.875	6445	429	0.468	1615	1200 (1.75")	1510 (1.75")		
	14.000	7755	622	0.550	1830	1200 (1.75")	1510 (1.75")		
	16.000	8995	836	0.625	2020	1200 (1.75")	1510 (1.75")		
	18.000	10135	1082	0.700	2185	1200 (2.50")	1799 (2.50")		
	20.000	11270	1360	0.774	2320	1200 (2.50")	1857 (2.50")		
	22.000	12390	1669	0.850	2435	1200 (2.50")	1906 (2.50")		
	24.000	13505	2010	0.922	2525	1200 (2.50")	1945 (2.50")		
LPI 56A	11.875	10170	668	0.549	1940	1400 (1.75")	1840 (1.75")	3800	4000
	14.000	12250	968	0.641	2241	1400 (1.75")	1840 (1.75")		
	16.000	14205	1301	0.729	2581	1400 (1.75")	1840 (1.75")		
	18.000	16010	1684	0.817	2921	1700 (2.50")	2303 (2.50")		5000
	20.000	17800	2115	0.905	3261	1700 (2.50")	2449 (2.50")		
	22.000	19575	2597	0.993	3601	1700 (2.50")	2595 (2.50")		
	24.000	21340	3127	1.081	3856	1700 (2.50")	2704 (2.50")		

For **SI** Units: 1 inch = 25.4 mm, 1 plf = 14.6 N/m, 1 ft-lb = 1.36 N-m, 1 lb = 4.45 N, 1 in^2-lb = 0.00287 N-m^2

NOTES:

1. The design values are for normal duration of load and may be adjusted in accordance with the applicable code.
2. Moment capacity shall **not** be increased by any code allowed repetitive member use factor.
3. Shear capacity represents I-joists having web stiffeners, except for depths less than 11-7/8 inches.
4. W/ W.S. is with Web Stiffeners and W/O W.S. is Without Web Stiffeners.
5. The allowable design values shall apply to product installation conditions of use that are dry, well ventilated and covered. Dry conditions are product installation conditions where ambient moisture content is 16% or less.
6. When calculating deflection, both bending and shear deformation shall be determined using the following formulas:

Example 1 – Formula for uniform load on a simple span joist:

$$\Delta = \frac{22.5wL^4}{EI} + \frac{wL^2}{K}$$

Example 2 – Formula for concentrated load on a simple span joist:

$$\Delta = \frac{36PL^3}{EI} + \frac{2PL}{K}$$

where:

Δ= deflection (in.).
w= uniform load in pounds per lineal foot (plf).
L= design span (ft).
EI= stiffness in lbs-in^2.
P= concentrated load (lbs).

K= shear deformation coefficient (ft-lbs/in.).

Table 3. Design Values of I-Joists (Cont'd)

JOIST SERIES	JOIST DEPTH (in.)	JOIST WEIGHT (plf)	MOMENT (lbs-ft)	SHEAR (lbs)	END REACTION W/O W.S. (lbs)	INTERIOR REACTION		EI x 10^6 (lbs-in^2)	K x 10^6 (ft-lbs/in)
						W/O W.S. (lbs)	W/W.S. (lbs)		
TLI 15	9.5	1.9	2800	1125	965	2245	2245	177	0.408
	11.875	2.2	3735	1425	965	2245	2245	305	0.506
TLI 25	9.5	2.1	3290	1125	995	2440	2650	204	0.414
	11.875	2.4	4390	1425	995	2440	2650	351	0.512
	14	2.8	5385	1560	995	2440	2650	521	0.602
TLI 35	11.875	2.8	5865	1425	1250	2850	3060	455	0.522
	14	3.0	7200	1560	1250	2850	3060	672	0.612
	16	3.3	8455	1700	1250	2850	3060	919	0.697
TLI CTR	9.5	1.9	2215	1125	965	2245	2245	165	0.408
	11.875	2.2	2955	1425	965	2245	2245	286	0.506

For **SI**: 1 inch = 25.4 mm, 1 plf = 14.6 N/m, 1 ft-lb = 1.36 N-m, 1 lb = 4.45 N, 1 in^2-lb = 0.00287 N-m^2.

Table 4. Design Values of I-Joists (Cont'd)

JOIST SERIES	JOIST DEPTH (in.)	JOIST WEIGHT (plf)	MOMENT (lbs-ft)	SHEAR (lbs)	MAX. END REACTION		INTERIOR REACTION		EI x 10^6 (lbs-in^2)	K x 10^6 (ft-lbs/in)
					W/O W.S. (lbs)	W/ W.S. (lbs)	W/O W.S. (lbs)	W/ W.S. (lbs)		
TLI 16	9.5	2.25	2220	1225	1040	1225	2600	2600	205	0.426
	11.5	2.65	2765	1335	1165	1380	2750	2960	309	0.499
	11.875	2.80	2965	1375	1215	1425	2800	3100	352	0.526
	14	3.00	3640	1630	1075	1470	2300	3000	522	0.616
	16	3.30	4275	1630	1075	1470	2300	3000	718	0.702
TLI 21	9.5	2.25	2770	1225	1150	1225	2700	2700	243	0.426
	11.5	2.65	3460	1410	1215	1380	2750	2960	366	0.499
	11.875	2.80	3705	1450	1230	1425	2800	3100	417	0.526
	14	3.00	4550	1710	1270	1550	2875	3100	616	0.616
	16	3.30	5340	1925	1320	1690	2950	3350	845	0.702

For **SI**: 1 inch = 25.4 mm, 1 plf = 14.6 N/m, 1 ft-lb = 1.36 N-m, 1 lb = 4.45 N, 1 in^2-lb = 0.00287 N-m^2.

NOTES FOR TABLES 3 AND 4:

1. The design values are for normal duration of load and may be adjusted in accordance with the applicable code.
2. Moment capacity in Table 3 can be increased by 4% in repetitive member situations. Moment capacity in Table 4 can be increased by 7% in repetitive member situations.
3. Allowable shear is based on a 3.5-inch bearing with web stiffeners on ends.
4. Maximum end reaction is based on a 1.75-inch bearing.
5. Maximum interior reaction is based on a 3.5-inch bearing.
6. W/ W.S. is With Web Stiffeners and W/O W.S. is Without Web Stiffeners.
7. The allowable design values shall apply to product installation conditions of use that are dry, well ventilated and covered. Dry conditions are product installation conditions where ambient moisture content is 16% or less.
8. When calculating deflection, both bending and shear deformation shall be determined using the following formulas:

   EXAMPLE 1 – Formula for uniform load on a simple span joist:

$$\Delta = \frac{22.5wL^4}{EI} + \frac{wL^2}{K}$$

   EXAMPLE 2 – Formula for concentrated load on a simple span joist:

$$\Delta = \frac{36PL^3}{EI} + \frac{2PL}{K}$$

   where:

   Δ= deflection (in.).
   P = concentrated load (lbs).
   w = uniform load in pounds per lineal foot (plf).
   L = design span (ft).
   K = shear deformation coefficient (ft-lbs/in.).
   EI= stiffness in lbs-in^2.

Figure 1. I-Joist Web Stiffener Requirements

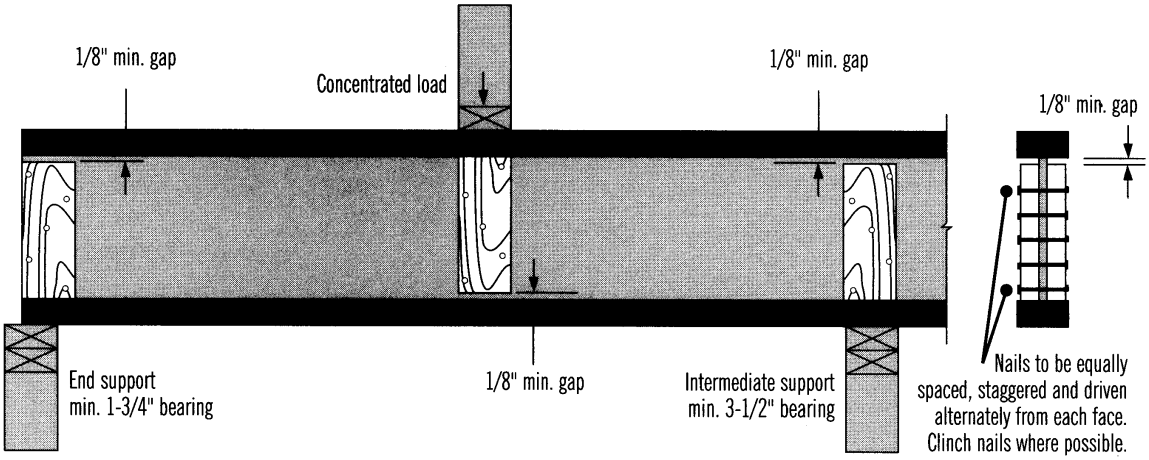

NOTES:
1. Web Stiffeners, when required, must be installed in pairs – one to each side of the web. Web stiffeners are always required for the "Bird's Mouth" roof bearing detail (Figure 9, Detail 6).
2. Web stiffeners should be cut to fit between the flanges of the I-joist, leaving a minimum 1/8" gap (1" maximum). At bearing locations, the stiffeners should be installed tight to the bottom flange with the gap to the top flange. At locations of concentrated loads, the stiffeners should be installed tight to the top flange with the gap to the bottom flange.
3. Web stiffeners should be cut from APA-rated (or equal) OSB or plywood, or from 2x lumber or structural composite lumber.
4. Web stiffeners should be the same width as the bearing surface, with a minimum of 3-1/2".
5. See Table 5 for required nailing, maximum stiffener depth and minimum stiffener thickness.
6. See Tables 1 to 4 for minimum end bearing and interior bearing length.

Table 5. I-Joist Web Stiffener Details

JOIST DEPTH (in.)	MAXIMUM WEB STIFFENER DEPTH (in.)	TOTAL NUMBER OF 8d BOX NAILS											
		LPI I-Joist Series								TLI I-Joist Series			
		[1]100-150	[2]200-250	[2]300-350	[3,5]550	[1]26/26A	[2]30/30A	[2]36/36A	[3,5]56A	[1]15/CTR	[2]25	[2]35	[4]16/21
9.250	6-1/8	-	-	-	-	3	-	-	-	-	-	-	-
9.500	6-3/8	3	3	3	-	3	3	-	-	3	3	-	3
11.250	8-1/8	-	-	-	-	3	-	-	-	-	-	-	-
11.500	8-3/8	-	-	-	-	-	-	-	-	-	-	-	3
11.875	8-3/4	3	3	3	3	3	3	4	4	3	3	3	3
14.000	10-7/8	-	3	3	3	-	4	5	5	-	3	3	3
16.000	12-7/8	-	3	3	3	-	4	6	6	-	-	3	3
18.000	14-7/8	-	-	-	-	-	-	7	7	-	-	-	-
20.000	16-7/8	-	-	-	-	-	-	8	8	-	-	-	-
22.000	18-7/8	-	-	-	-	-	-	9	9	-	-	-	-
24.000	20-7/8	-	-	-	-	-	-	10	10	-	-	-	-

NOTES:
1. Web stiffeners shall be a minimum of 15/32" thick.
2. Web stiffeners shall be a minimum of 23/32" thick.
3. Web stiffeners shall be a minimum of 1-1/2" thick.
4. Web stiffeners shall be a minimum of 1-1/8" thick.
5. For the LPI 550 and LPI 56A Series I-Joists it is required to use 10d box or common nails.
6. See Figure 1 for I-Joist web stiffener requirements.

Figure 2. Web Hole Drawing for LPI Joists

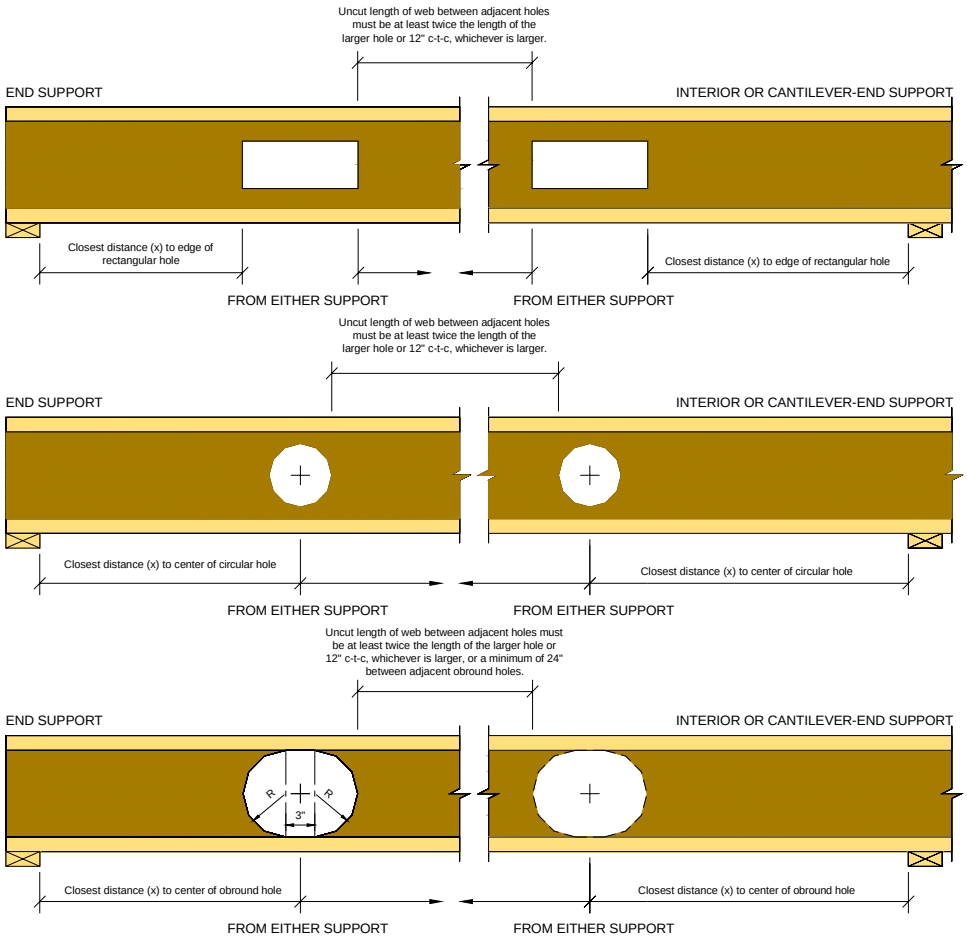

Table 6. Web Hole Equations for LPI Joists

General equation form for allowable circular and rectangular holes shear:

Allowable Web Hole Shear (lbs) = C1* (D - H)/D + C2 * W + C3

Where: D = Joist Depth (in)
H = Hole Height (in)
W = Hole Width (in)

Equation Constants:

Circular Holes

Joist Series	C1	C2	C3	Maximum Depth
100	1050	0	38	-
200	885	0	307	-
300	1378	0	105	-
125	1050	0	38	-
225	885	0	307	-
325	1378	0	105	-
150	1050	0	38	-
250	885	0	307	-
350	1378	0	105	-
550	1378	0	105	-
26	1235	0	45	-
30	1041	0	361	-
36	1621	0	124	16"
56	1621	0	124	16"
36	2489	0	88	24"
56	2489	0	88	24"

Rectangular Holes

LPI Joist Series	LPI Joist Depth	C1	C2	C3
26 30 36 56	9.5	610	-22.4	282
	11.875	610	-22.4	282
	14	1075	-33.8	413
	16	1075	-33.8	413
	18	1731	-52.0	599
	20	1731	-52.0	599
	22	1731	-52.0	599
	24	1731	-52.0	599
100 125 150 200 225 250 300 325 350 550	9.5	519	-19.0	240
	11.875	519	-19.0	240
	14	914	-28.7	351
	16	914	-28.7	351
	18	1471	-44.2	509
	20	1471	-44.2	509
	22	1471	-44.2	509
	24	1471	-44.2	509

Allowable Web Hole Shear for Obround Holes:

Joist Series	Shear (lbs)	Maximum Depth (in)	Joist Series	Shear (lbs)	Maximum Depth (in)
100	-	-	26	-	-
200	360	-	30	360	-
300	420	-	36	420	16
125	-	-	56	420	16
225	360	-	36	-	24
325	420	-	56	-	24
150	-	-			
250	360	-			
350	420	-			
550	420	-			

NOTES:

1. The above Obround hole allowable shears apply to all joist depths in a given series and are based on the maximum size hole.
2. Smaller Obround holes are limited to the same value.
3. For LPI 36 and LPI 56A depths greater than 16”, the maximum Obround hole for the 16” depth can be cut using the allowable for that depth.

DESIGN ASSUMPTIONS:

1. The Allowable Web Hole Shear calculated from above is for normal load duration and can be adjusted for other durations.
2. The critical location for web hole shear is at the center of a circular hole, or to either edge of a rectangular or Obround hole.
3. Obround holes are (up to) full web-depth holes with semi-circular ends defined by three overlapping circular holes spaced up to 1-1/2” apart, center-to-center of holes.
4. The maximum hole depth for circular and rectangular holes is Joist Depth less 4”, except the maximum hole depth is 6” for 9-1/2” and 8” for 11-7/8” LPI joists. The maximum hole width for rectangular holes is 18”. Where the Maximum Hole Dimension for rectangular holes exceeds the maximum hole depth, the dimension refers to hole width and the hole depth is assumed to be the maximum for that joist depth.
5. Holes cannot be located any closer than 1’ or 3 times the length of the hole from the inside face of the closest bearing, without further analysis by a design professional.

Table 7. Circular Web Hole Chart for LPI Joists: 40 psf Live Load, 15 psf Dead Load, up to 24” OC

Joist Depth (in.)	Joist Series	Clear Span	Circular Holes (including Obround Holes)															
			Distance from End Suport								Distance from Interior Support or Cantilever-End Support							
			Hole Diameter							Obround Hole	Hole Diameter							Obround Hole
			2"	4"	6"	8"	10"	12"	14"		2"	4"	6"	8"	10"	12"	14"	
9 1/2	LPI 100 125 150	6'	1'-0"	1'-0"	1'-6"	-	-	-	-	-	1'-0"	1'-0"	1'-6"	-	-	-	-	-
		8'	1'-0"	1'-0"	1'-6"	-	-	-	-	-	1'-0"	1'-0"	1'-6"	-	-	-	-	-
		10'	1'-0"	1'-0"	1'-6"	-	-	-	-	-	1'-0"	1'-0"	2'-8"	-	-	-	-	-
		12'	1'-0"	1'-0"	2'-6"	-	-	-	-	-	1'-0"	2'-0"	4'-2"	-	-	-	-	-
		14'	1'-0"	1'-5"	3'-11"	-	-	-	-	-	1'-0"	3'-5"	5'-11"	-	-	-	-	-
		16'	1'-0"	2'-6"	4'-11"	-	-	-	-	-	2'-4"	4'-9"	7'-7"	-	-	-	-	-
		18'	1'-5"	3'-8"	6'-5"	-	-	-	-	-	4'-0"	6'-3"	9'-0"	-	-	-	-	-
	LPI 200 225 250	6'	1'-0"	1'-0"	1'-6"	-	-	-	-	1'-0"	1'-0"	1'-0"	1'-6"	-	-	-	-	1'-0"
		8'	1'-0"	1'-0"	1'-6"	-	-	-	-	1'-0"	1'-0"	1'-0"	1'-6"	-	-	-	-	1'-11"
		10'	1'-0"	1'-0"	1'-6"	-	-	-	-	2'-1"	1'-0"	1'-0"	1'-6"	-	-	-	-	3'-6"
		12'	1'-0"	1'-0"	1'-6"	-	-	-	-	3'-5"	1'-0"	1'-0"	2'-0"	-	-	-	-	5'-1"
		14'	1'-0"	1'-0"	1'-6"	-	-	-	-	4'-8"	1'-0"	1'-8"	3'-5"	-	-	-	-	6'-8"
		16'	1'-0"	1'-0"	2'-6"	-	-	-	-	5'-8"	1'-1"	2'-9"	4'-9"	-	-	-	-	-
		18'	1'-0"	1'-10"	3'-8"	-	-	-	-	7'-4"	2'-8"	4'-5"	6'-3"	-	-	-	-	-
	LPI 300 325	6'	1'-0"	1'-0"	1'-6"	-	-	-	-	1'-0"	1'-0"	1'-0"	1'-6"	-	-	-	-	1'-0"
		8'	1'-0"	1'-0"	1'-6"	-	-	-	-	1'-0"	1'-0"	1'-0"	1'-6"	-	-	-	-	1'-4"
		10'	1'-0"	1'-0"	1'-6"	-	-	-	-	1'-4"	1'-0"	1'-0"	1'-6"	-	-	-	-	2'-8"
		12'	1'-0"	1'-0"	1'-6"	-	-	-	-	2'-6"	1'-0"	1'-0"	2'-4"	-	-	-	-	4'-2"
		14'	1'-0"	1'-0"	1'-10"	-	-	-	-	3'-11"	1'-0"	1'-0"	3'-10"	-	-	-	-	5'-11"
		16'	1'-0"	1'-0"	2'-10"	-	-	-	-	5'-3"	1'-0"	1'-11"	5'-2"	-	-	-	-	7'-7"
		18'	1'-0"	1'-0"	4'-1"	-	-	-	-	6'-5"	1'-0"	3'-6"	6'-9"	-	-	-	-	9'-0"
		20'	1'-0"	2'-1"	5'-1"	-	-	-	-	7'-7"	1'-11"	4'-11"	8'-0"	-	-	-	-	-
11 7/8	LPI 100 125 150	6'	1'-0"	1'-0"	1'-6"	2'-0"	-	-	-	-	1'-0"	1'-0"	1'-6"	2'-0"	-	-	-	-
		8'	1'-0"	1'-0"	1'-6"	2'-0"	-	-	-	-	1'-0"	1'-0"	1'-6"	2'-0"	-	-	-	-
		10'	1'-0"	1'-0"	1'-6"	2'-0"	-	-	-	-	1'-0"	1'-0"	1'-6"	3'-3"	-	-	-	-
		12'	1'-0"	1'-0"	1'-6"	3'-1"	-	-	-	-	1'-0"	1'-1"	2'-8"	4'-9"	-	-	-	-
		14'	1'-0"	1'-0"	2'-2"	4'-3"	-	-	-	-	1'-0"	2'-5"	4'-2"	6'-4"	-	-	-	-
		16'	1'-0"	1'-8"	3'-8"	5'-8"	-	-	-	-	1'-11"	3'-11"	5'-7"	8'-0"	-	-	-	-
		18'	1'-0"	2'-9"	4'-7"	6'-10"	-	-	-	-	3'-6"	5'-4"	7'-2"	-	-	-	-	-
		20'	2'-1"	4'-1"	6'-1"	8'-1"	-	-	-	-	4'-11"	7'-0"	9'-0"	-	-	-	-	-
		22'	3'-4"	5'-0"	7'-3"	9'-5"	-	-	-	-	6'-0"	8'-3"	10'-5"	-	-	-	-	-
	LPI 200 225 250	6'	1'-0"	1'-0"	1'-6"	2'-0"	-	-	-	1'-0"	1'-0"	1'-0"	1'-6"	2'-0"	-	-	-	1'-0"
		8'	1'-0"	1'-0"	1'-6"	2'-0"	-	-	-	1'-0"	1'-0"	1'-0"	1'-6"	2'-0"	-	-	-	1'-11"
		10'	1'-0"	1'-0"	1'-6"	2'-0"	-	-	-	2'-1"	1'-0"	1'-0"	1'-6"	2'-0"	-	-	-	3'-6"
		12'	1'-0"	1'-0"	1'-6"	2'-0"	-	-	-	3'-5"	1'-0"	1'-0"	1'-6"	2'-4"	-	-	-	5'-1"
		14'	1'-0"	1'-0"	1'-6"	2'-0"	-	-	-	4'-8"	1'-0"	1'-0"	2'-5"	3'-10"	-	-	-	6'-8"
		16'	1'-0"	1'-0"	1'-8"	2'-10"	-	-	-	5'-8"	1'-0"	2'-4"	3'-7"	5'-2"	-	-	-	-
		18'	1'-0"	1'-0"	2'-9"	4'-1"	-	-	-	7'-4"	2'-2"	3'-6"	4'-11"	6'-9"	-	-	-	-
		20'	1'-1"	2'-1"	3'-7"	5'-7"	-	-	-	8'-7"	3'-5"	4'-11"	6'-6"	8'-6"	-	-	-	-
		22'	1'-8"	3'-4"	5'-0"	6'-8"	-	-	-	10'-0"	4'-11"	6'-7"	8'-3"	9'-11"	-	-	-	-

DESIGN ASSUMPTIONS FOR TABLES 7 TO 8:

1. The hole locations listed above are valid for joists supporting only uniform loads. The total uniform load must not exceed 110 plf (e.g. 40 psf Live Load and a 15 psf Dead Load, spaced up to 24” oc). The uniform Dead Load must be at least 10 plf.
2. Hole location is measured from the inside face of bearing to the center of a circular or Obround hole, or to the nearest edge of a rectangular hole, from the closest support.
3. Obround holes are (up to) full web-depth holes with semi-circular ends defined by three overlapping circular holes spaced up to 1-1/2” apart, center-to-center of holes.
4. The maximum hole depth for circular and rectangular holes is Joist Depth less 4”, except the maximum hole depth is 6” for 9-1/2” and 8” for 11-7/8” LPI joists. The maximum hole width for rectangular holes is 18”. Where the Maximum Hole Dimension for rectangular holes exceeds the maximum hole depth, the dimension refers to the hole width and the hole depth is assumed to be the maximum for that joist depth.
5. Holes cannot be located in the span where designated "-", without further analysis by a professional engineer (see Note 8 below).
6. Clear Span has NOT been verified for these joists and is shown for informational purposes only! Verify that the joist selected will work for the span and loading conditions needed before checking hole location.

GENERAL NOTES FOR TABLES 7 TO 8:

1. **CUT HOLES CAREFULLY! DO NOT OVERCUT HOLES! DO NOT CUT JOIST FLANGES!**
2. Circular and rectangular holes may be placed anywhere within the depth of the web. A minimum ¼” clear distance is required between the hole and a flange. Obround holes may be up to full web-depth.
3. Round holes up to 1-1/2” diameter may be placed anywhere in the web.
4. Perforated “knockouts” may be neglected when locating web holes.
5. Holes larger than 1-1/2” are not permitted in cantilevers without special engineering.
6. Multiple holes must have a clear separation along the length of the joist of at least twice the length of the larger adjacent hole, or a minimum of 12” center-to-center, whichever is greater. **Exception**: adjacent Obround holes may be spaced as close as 24” clear distance between holes.
7. Multiple holes may be spaced closer provided they fit within the boundary of an acceptable larger hole. Example: two 3” round holes aligned parallel to the joist length may be spaced 2” apart (clear distance) provided that a 3” high by 8” long rectangle or an 8” diameter round hole are acceptable for the joist depth at that location and completely encompass the holes.
8. Larger holes, greater uniform loads or non-uniform loads, and closer proximity to supports and other holes may be possible with further analysis (See Section “Design” #4 or web hole shear equations listed in Table 6).
9. Not all series are available in all depths. Check availability with a local LP Engineered Wood Products distributor.
10. For SI Units Conversion: 1 in. = 25.4 mm; 1 ft. = 304.8 mm.

Table 7. Circular Web Hole Chart for LPI Joists: 40 psf Live Load, 15 psf Dead Load, up to 24” OC (Cont’d)

Joist Depth (in.)	Joist Series	Clear Span	Circular Holes (including Obround Holes)															
			Distance from End Suport								Distance from Interior Support or Cantilever-End Support							
			Hole Diameter							Obround Hole	Hole Diameter							Obround Hole
			2"	4"	6"	8"	10"	12"	14"		2"	4"	6"	8"	10"	12"	14"	
11 7/8	LPI 300 325 350	6'	1'-0"	1'-0"	1'-6"	2'-0"	-	-	-	1'-0"	1'-0"	1'-0"	1'-6"	2'-0"	-	-	-	1'-0"
		8'	1'-0"	1'-0"	1'-6"	2'-0"	-	-	-	1'-0"	1'-0"	1'-0"	1'-6"	2'-0"	-	-	-	1'-4"
		10'	1'-0"	1'-0"	1'-6"	2'-0"	-	-	-	1'-4"	1'-0"	1'-0"	1'-6"	2'-0"	-	-	-	2'-8"
		12'	1'-0"	1'-0"	1'-6"	2'-0"	-	-	-	2'-6"	1'-0"	1'-0"	1'-6"	2'-11"	-	-	-	4'-2"
		14'	1'-0"	1'-0"	1'-6"	2'-2"	-	-	-	3'-11"	1'-0"	1'-0"	2'-0"	4'-2"	-	-	-	5'-11"
		16'	1'-0"	1'-0"	1'-6"	3'-8"	-	-	-	5'-3"	1'-0"	1'-1"	3'-2"	6'-0"	-	-	-	7'-7"
		18'	1'-0"	1'-0"	2'-4"	4'-7"	-	-	-	6'-5"	1'-0"	2'-2"	4'-5"	7'-2"	-	-	-	9'-0"
		20'	1'-0"	1'-1"	3'-7"	6'-1"	-	-	-	7'-7"	1'-5"	3'-11"	6'-0"	9'-0"	-	-	-	-
		22'	1'-0"	2'-3"	4'-6"	7'-3"	-	-	-	8'-11"	2'-8"	4'-11"	7'-8"	10'-5"	-	-	-	-
		24'	1'-3"	3'-1"	5'-6"	8'-6"	-	-	-	10'-4"	4'-2"	6'-7"	9'-0"	12'-0"	-	-	-	-
	LPI 550	6'	1'-0"	1'-0"	1'-6"	2'-0"	-	-	-	1'-0"	1'-0"	1'-0"	1'-6"	2'-0"	-	-	-	1'-0"
		8'	1'-0"	1'-0"	1'-6"	2'-0"	-	-	-	1'-0"	1'-0"	1'-0"	1'-6"	2'-0"	-	-	-	1'-4"
		10'	1'-0"	1'-0"	1'-6"	2'-0"	-	-	-	1'-4"	1'-0"	1'-0"	1'-6"	2'-0"	-	-	-	2'-8"
		12'	1'-0"	1'-0"	1'-6"	2'-0"	-	-	-	2'-6"	1'-0"	1'-0"	1'-6"	2'-11"	-	-	-	4'-2"
		14'	1'-0"	1'-0"	1'-6"	2'-2"	-	-	-	3'-11"	1'-0"	1'-0"	2'-0"	4'-2"	-	-	-	5'-11"
		16'	1'-0"	1'-0"	1'-6"	3'-8"	-	-	-	5'-3"	1'-0"	1'-1"	3'-2"	6'-0"	-	-	-	7'-7"
		18'	1'-0"	1'-0"	2'-4"	4'-7"	-	-	-	6'-5"	1'-0"	2'-2"	4'-5"	7'-2"	-	-	-	9'-0"
		20'	1'-0"	1'-1"	3'-7"	6'-1"	-	-	-	7'-7"	1'-5"	3'-11"	6'-0"	9'-0"	-	-	-	-
		22'	1'-0"	2'-3"	4'-6"	7'-3"	-	-	-	8'-11"	2'-8"	4'-11"	7'-8"	10'-5"	-	-	-	-
		24'	1'-3"	3'-1"	5'-6"	8'-6"	-	-	-	10'-4"	4'-2"	6'-7"	9'-0"	12'-0"	-	-	-	-
		26'	2'-0"	4'-7"	7'-3"	9'-10"	-	-	-	11'-10"	5'-10"	7'-9"	11'-0"	-	-	-	-	-
		28'	2'-10"	5'-8"	8'-6"	11'-4"	-	-	-	13'-5"	6'-11"	9'-9"	12'-7"	-	-	-	-	-
14	LPI 200 225 250	8'	1'-0"	1'-0"	1'-6"	2'-0"	2'-6"	-	-	1'-0"	1'-0"	1'-0"	1'-6"	2'-0"	2'-6"	-	-	1'-11"
		10'	1'-0"	1'-0"	1'-6"	2'-0"	2'-6"	-	-	2'-1"	1'-0"	1'-0"	1'-6"	2'-0"	2'-6"	-	-	3'-6"
		12'	1'-0"	1'-0"	1'-6"	2'-0"	2'-6"	-	-	3'-5"	1'-0"	1'-0"	1'-6"	2'-0"	2'-8"	-	-	5'-1"
		14'	1'-0"	1'-0"	1'-6"	2'-0"	2'-6"	-	-	4'-8"	1'-0"	1'-0"	1'-8"	2'-9"	4'-2"	-	-	6'-8"
		16'	1'-0"	1'-0"	1'-6"	2'-1"	3'-3"	-	-	5'-8"	1'-0"	1'-11"	3'-2"	4'-4"	5'-7"	-	-	-
		18'	1'-0"	1'-0"	1'-10"	3'-3"	4'-7"	-	-	7'-4"	1'-9"	3'-1"	4'-5"	5'-10"	7'-2"	-	-	-
		20'	1'-0"	2'-1"	3'-1"	4'-7"	6'-1"	-	-	8'-7"	3'-5"	4'-5"	6'-0"	7'-6"	9'-0"	-	-	-
		22'	1'-8"	2'-10"	4'-6"	5'-7"	7'-3"	-	-	10'-0"	4'-4"	6'-0"	7'-1"	8'-9"	10'-5"	-	-	-
		24'	3'-1"	4'-3"	5'-6"	6'-8"	8'-6"	-	-	11'-6"	5'-11"	7'-2"	9'-0"	10'-2"	12'-0"	-	-	-
		26'	4'-0"	5'-3"	6'-7"	8'-6"	9'-10"	-	-	-	7'-9"	9'-1"	10'-5"	12'-4"	-	-	-	-
	LPI 300 325 350 550	8'	1'-0"	1'-0"	1'-6"	2'-0"	2'-6"	-	-	1'-0"	1'-0"	1'-0"	1'-6"	2'-0"	2'-6"	-	-	1'-4"
		10'	1'-0"	1'-0"	1'-6"	2'-0"	2'-6"	-	-	1'-4"	1'-0"	1'-0"	1'-6"	2'-0"	2'-6"	-	-	2'-8"
		12'	1'-0"	1'-0"	1'-6"	2'-0"	2'-6"	-	-	2'-6"	1'-0"	1'-0"	1'-6"	2'-0"	3'-7"	-	-	4'-2"
		14'	1'-0"	1'-0"	1'-6"	2'-0"	2'-10"	-	-	3'-11"	1'-0"	1'-0"	1'-6"	2'-9"	4'-10"	-	-	5'-11"
		16'	1'-0"	1'-0"	1'-6"	2'-1"	4'-1"	-	-	5'-3"	1'-0"	1'-0"	2'-4"	4'-4"	6'-5"	-	-	7'-7"
		18'	1'-0"	1'-0"	1'-6"	3'-3"	5'-6"	-	-	6'-5"	1'-0"	1'-9"	3'-6"	5'-10"	8'-1"	-	-	9'-0"
		20'	1'-0"	1'-0"	2'-1"	4'-7"	6'-7"	-	-	7'-7"	1'-0"	2'-11"	4'-11"	7'-0"	9'-6"	-	-	-
		22'	1'-0"	1'-8"	3'-4"	5'-7"	7'-10"	-	-	8'-11"	2'-8"	4'-4"	6'-7"	8'-9"	-	-	-	-
		24'	1'-0"	2'-5"	4'-10"	6'-8"	9'-1"	-	-	10'-4"	3'-6"	5'-11"	7'-9"	10'-2"	-	-	-	-
		26'	2'-0"	4'-0"	5'-11"	7'-11"	10'-6"	-	-	11'-10"	5'-2"	7'-1"	9'-9"	11'-8"	-	-	-	-
		28'	2'-10"	5'-0"	7'-1"	9'-2"	12'-0"	-	-	13'-5"	6'-3"	9'-1"	11'-2"	13'-4"	-	-	-	-
		30'	3'-10"	6'-1"	8'-4"	10'-7"	13'-7"	-	-	14'-4"	8'-2"	10'-6"	12'-9"	15'-0"	-	-	-	-
16	LPI 200 225 250	8'	1'-0"	1'-0"	1'-6"	2'-0"	2'-6"	3'-0"	-	1'-0"	1'-0"	1'-0"	1'-6"	2'-0"	2'-6"	3'-0"	-	1'-11"
		10'	1'-0"	1'-0"	1'-6"	2'-0"	2'-6"	3'-0"	-	2'-1"	1'-0"	1'-0"	1'-6"	2'-0"	2'-6"	3'-0"	-	3'-6"
		12'	1'-0"	1'-0"	1'-6"	2'-0"	2'-6"	3'-0"	-	3'-5"	1'-0"	1'-0"	1'-6"	2'-0"	2'-6"	3'-0"	-	5'-1"
		14'	1'-0"	1'-0"	1'-6"	2'-0"	2'-6"	3'-0"	-	4'-8"	1'-0"	1'-0"	1'-6"	2'-5"	3'-5"	4'-6"	-	6'-8"
		16'	1'-0"	1'-0"	1'-6"	2'-0"	2'-6"	3'-8"	-	5'-8"	1'-0"	1'-6"	2'-4"	3'-7"	4'-9"	6'-0"	-	-
		18'	1'-0"	1'-0"	1'-6"	2'-9"	3'-8"	5'-0"	-	7'-4"	1'-9"	2'-8"	4'-0"	4'-11"	6'-3"	7'-8"	-	-
		20'	1'-0"	1'-7"	2'-7"	3'-7"	5'-1"	6'-1"	-	8'-7"	2'-11"	3'-11"	5'-5"	6'-6"	8'-0"	9'-6"	-	-
		22'	1'-8"	2'-10"	3'-11"	5'-0"	6'-2"	7'-10"	-	10'-0"	4'-4"	5'-5"	6'-7"	8'-3"	9'-4"	11'-0"	-	-
		24'	2'-5"	3'-8"	4'-10"	6'-1"	7'-3"	9'-1"	-	11'-6"	5'-11"	7'-2"	8'-4"	9'-7"	10'-10"	-	-	-
		26'	4'-0"	4'-7"	5'-11"	7'-3"	8'-6"	10'-6"	-	-	7'-1"	8'-5"	9'-9"	11'-0"	13'-0"	-	-	-
		28'	5'-0"	6'-4"	7'-1"	8'-6"	9'-11"	12'-0"	-	-	9'-1"	9'-9"	11'-2"	12'-7"	-	-	-	-
		30'	6'-1"	7'-7"	8'-4"	9'-10"	11'-4"	12'-10"	-	-	10'-6"	12'-0"	12'-9"	14'-3"	-	-	-	-
	LPI 300 325 350 550	8'	1'-0"	1'-0"	1'-6"	2'-0"	2'-6"	3'-0"	-	1'-0"	1'-0"	1'-0"	1'-6"	2'-0"	2'-6"	3'-0"	-	1'-4"
		10'	1'-0"	1'-0"	1'-6"	2'-0"	2'-6"	3'-0"	-	1'-4"	1'-0"	1'-0"	1'-6"	2'-0"	2'-6"	3'-0"	-	2'-8"
		12'	1'-0"	1'-0"	1'-6"	2'-0"	2'-6"	3'-0"	-	2'-6"	1'-0"	1'-0"	1'-6"	2'-0"	2'-6"	3'-10"	-	4'-2"
		14'	1'-0"	1'-0"	1'-6"	2'-0"	2'-6"	3'-7"	-	3'-11"	1'-0"	1'-0"	1'-6"	2'-0"	3'-5"	5'-7"	-	5'-11"
		16'	1'-0"	1'-0"	1'-6"	2'-0"	2'-10"	4'-11"	-	5'-3"	1'-0"	1'-0"	1'-6"	3'-2"	5'-2"	7'-2"	-	7'-7"
		18'	1'-0"	1'-0"	1'-6"	2'-4"	4'-1"	5'-11"	-	6'-5"	1'-0"	1'-3"	2'-8"	4'-5"	6'-9"	8'-7"	-	9'-0"
		20'	1'-0"	1'-0"	1'-7"	3'-1"	5'-1"	7'-7"	-	7'-7"	1'-0"	2'-5"	4'-5"	6'-0"	8'-0"	-	-	-
		22'	1'-0"	1'-2"	2'-10"	4'-6"	6'-8"	8'-11"	-	8'-11"	2'-1"	3'-9"	5'-5"	7'-8"	9'-11"	-	-	-
		24'	1'-0"	1'-10"	3'-8"	5'-6"	7'-11"	10'-4"	-	10'-4"	3'-6"	5'-4"	7'-2"	9'-0"	11'-5"	-	-	-
		26'	1'-4"	3'-4"	5'-3"	7'-3"	9'-2"	11'-2"	-	11'-10"	5'-2"	6'-5"	8'-5"	10'-5"	13'-0"	-	-	-
		28'	2'-10"	4'-3"	6'-4"	8'-6"	10'-7"	12'-8"	-	13'-5"	6'-3"	8'-4"	10'-6"	12'-7"	-	-	-	-
		30'	3'-10"	5'-4"	7'-7"	9'-1"	11'-4"	14'-4"	-	14'-4"	7'-5"	9'-9"	12'-0"	14'-3"	-	-	-	-

Table 7. Circular Web Hole Chart for LPI Joists: 40 psf Live Load, 15 psf Dead Load, up to 24" OC (Cont'd)

Joist Depth (in.)	Joist Series	Clear Span	Circular Holes (including Obround Holes)															
			Distance from End Suport								Distance from Interior Support or Cantilever-End Support							
			Hole Diameter							Obround	Hole Diameter							Obround
			2"	4"	6"	8"	10"	12"	14"	Hole	2"	4"	6"	8"	10"	12"	14"	Hole
9 1/2	LPI 26A	6'	1'-0"	1'-0"	1'-6"	-	-	-	-	-	1'-0"	1'-0"	1'-6"	-	-	-	-	-
		8'	1'-0"	1'-0"	1'-6"	-	-	-	-	-	1'-0"	1'-0"	1'-6"	-	-	-	-	-
		10'	1'-0"	1'-0"	1'-6"	-	-	-	-	-	1'-0"	1'-0"	1'-11"	-	-	-	-	-
		12'	1'-0"	1'-0"	1'-10"	-	-	-	-	-	1'-0"	1'-0"	3'-3"	-	-	-	-	-
		14'	1'-0"	1'-0"	2'-10"	-	-	-	-	-	1'-0"	2'-0"	4'-10"	-	-	-	-	-
		16'	1'-0"	1'-3"	4'-1"	-	-	-	-	-	1'-1"	3'-7"	6'-5"	-	-	-	-	-
		18'	1'-0"	2'-4"	5'-6"	-	-	-	-	-	2'-2"	4'-11"	8'-1"	-	-	-	-	-
	LPI 30A	6'	1'-0"	1'-0"	1'-6"	-	-	-	-	1'-0"	1'-0"	1'-0"	1'-6"	-	-	-	-	1'-0"
		8'	1'-0"	1'-0"	1'-6"	-	-	-	-	1'-0"	1'-0"	1'-0"	1'-6"	-	-	-	-	1'-11"
		10'	1'-0"	1'-0"	1'-6"	-	-	-	-	2'-1"	1'-0"	1'-0"	1'-6"	-	-	-	-	3'-6"
		12'	1'-0"	1'-0"	1'-6"	-	-	-	-	3'-5"	1'-0"	1'-0"	1'-6"	-	-	-	-	5'-1"
		14'	1'-0"	1'-0"	1'-6"	-	-	-	-	4'-8"	1'-0"	1'-0"	2'-5"	-	-	-	-	6'-8"
		16'	1'-0"	1'-0"	1'-8"	-	-	-	-	5'-8"	1'-0"	1'-6"	3'-7"	-	-	-	-	-
		18'	1'-0"	1'-0"	2'-9"	-	-	-	-	7'-4"	1'-0"	2'-8"	5'-4"	-	-	-	-	-
11 7/8	LPI 26A	6'	1'-0"	1'-0"	1'-6"	2'-0"	-	-	-	-	1'-0"	1'-0"	1'-6"	2'-0"	-	-	-	-
		8'	1'-0"	1'-0"	1'-6"	2'-0"	-	-	-	-	1'-0"	1'-0"	1'-6"	2'-0"	-	-	-	-
		10'	1'-0"	1'-0"	1'-6"	2'-0"	-	-	-	-	1'-0"	1'-0"	1'-6"	2'-5"	-	-	-	-
		12'	1'-0"	1'-0"	1'-6"	2'-2"	-	-	-	-	1'-0"	1'-0"	1'-9"	3'-10"	-	-	-	-
		14'	1'-0"	1'-0"	1'-6"	3'-7"	-	-	-	-	1'-0"	1'-0"	3'-1"	5'-7"	-	-	-	-
		16'	1'-0"	1'-0"	2'-6"	4'-11"	-	-	-	-	1'-0"	2'-4"	4'-9"	7'-2"	-	-	-	-
		18'	1'-0"	1'-5"	3'-8"	5'-11"	-	-	-	-	1'-9"	4'-0"	6'-3"	8'-7"	-	-	-	-
		20'	1'-0"	2'-7"	4'-7"	7'-7"	-	-	-	-	2'-11"	5'-5"	7'-6"	-	-	-	-	-
		22'	1'-8"	3'-11"	6'-2"	8'-11"	-	-	-	-	4'-4"	6'-7"	9'-4"	-	-	-	-	-
	LPI 30A	6'	1'-0"	1'-0"	1'-6"	2'-0"	-	-	-	1'-0"	1'-0"	1'-0"	1'-6"	2'-0"	-	-	-	1'-0"
		8'	1'-0"	1'-0"	1'-6"	2'-0"	-	-	-	1'-0"	1'-0"	1'-0"	1'-6"	2'-0"	-	-	-	1'-11"
		10'	1'-0"	1'-0"	1'-6"	2'-0"	-	-	-	2'-1"	1'-0"	1'-0"	1'-6"	2'-0"	-	-	-	3'-6"
		12'	1'-0"	1'-0"	1'-6"	2'-0"	-	-	-	3'-5"	1'-0"	1'-0"	1'-6"	2'-0"	-	-	-	5'-1"
		14'	1'-0"	1'-0"	1'-6"	2'-0"	-	-	-	4'-8"	1'-0"	1'-0"	1'-6"	2'-9"	-	-	-	6'-8"
		16'	1'-0"	1'-0"	1'-6"	2'-1"	-	-	-	5'-8"	1'-0"	1'-0"	2'-4"	3'-11"	-	-	-	-
		18'	1'-0"	1'-0"	1'-6"	3'-3"	-	-	-	7'-4"	1'-0"	2'-2"	3'-6"	5'-10"	-	-	-	-
		20'	1'-0"	1'-0"	2'-7"	4'-1"	-	-	-	8'-7"	1'-5"	3'-5"	4'-11"	7'-0"	-	-	-	-
		22'	1'-0"	1'-8"	3'-4"	5'-7"	-	-	-	10'-0"	3'-3"	4'-11"	6'-7"	8'-9"	-	-	-	-
	LPI 36A	6'	1'-0"	1'-0"	1'-6"	2'-0"	-	-	-	1'-0"	1'-0"	1'-0"	1'-6"	2'-0"	-	-	-	1'-0"
		8'	1'-0"	1'-0"	1'-6"	2'-0"	-	-	-	1'-0"	1'-0"	1'-0"	1'-6"	2'-0"	-	-	-	1'-4"
		10'	1'-0"	1'-0"	1'-6"	2'-0"	-	-	-	1'-4"	1'-0"	1'-0"	1'-6"	2'-0"	-	-	-	2'-8"
		12'	1'-0"	1'-0"	1'-6"	2'-0"	-	-	-	2'-6"	1'-0"	1'-0"	1'-6"	2'-0"	-	-	-	4'-2"
		14'	1'-0"	1'-0"	1'-6"	2'-0"	-	-	-	3'-11"	1'-0"	1'-0"	1'-6"	3'-1"	-	-	-	5'-11"
		16'	1'-0"	1'-0"	1'-6"	2'-6"	-	-	-	5'-3"	1'-0"	1'-0"	1'-11"	4'-9"	-	-	-	7'-7"
		18'	1'-0"	1'-0"	1'-6"	3'-8"	-	-	-	6'-5"	1'-0"	1'-0"	3'-1"	6'-3"	-	-	-	9'-0"
		20'	1'-0"	1'-0"	2'-1"	5'-1"	-	-	-	7'-7"	1'-0"	1'-11"	4'-5"	7'-6"	-	-	-	-
		22'	1'-0"	1'-0"	2'-10"	6'-2"	-	-	-	8'-11"	1'-0"	3'-3"	6'-0"	9'-4"	-	-	-	-
		24'	1'-0"	1'-3"	4'-3"	7'-3"	-	-	-	10'-4"	1'-9"	4'-9"	7'-9"	10'-10"	-	-	-	-
	LPI 56A	6'	1'-0"	1'-0"	1'-6"	2'-0"	-	-	-	1'-0"	1'-0"	1'-0"	1'-6"	2'-0"	-	-	-	1'-0"
		8'	1'-0"	1'-0"	1'-6"	2'-0"	-	-	-	1'-0"	1'-0"	1'-0"	1'-6"	2'-0"	-	-	-	1'-4"
		10'	1'-0"	1'-0"	1'-6"	2'-0"	-	-	-	1'-4"	1'-0"	1'-0"	1'-6"	2'-0"	-	-	-	2'-8"
		12'	1'-0"	1'-0"	1'-6"	2'-0"	-	-	-	2'-6"	1'-0"	1'-0"	1'-6"	2'-0"	-	-	-	4'-2"
		14'	1'-0"	1'-0"	1'-6"	2'-0"	-	-	-	3'-11"	1'-0"	1'-0"	1'-6"	3'-1"	-	-	-	5'-11"
		16'	1'-0"	1'-0"	1'-6"	2'-6"	-	-	-	5'-3"	1'-0"	1'-0"	1'-11"	4'-9"	-	-	-	7'-7"
		18'	1'-0"	1'-0"	1'-6"	3'-8"	-	-	-	6'-5"	1'-0"	1'-0"	3'-1"	6'-3"	-	-	-	9'-0"
		20'	1'-0"	1'-0"	2'-1"	5'-1"	-	-	-	7'-7"	1'-0"	1'-11"	4'-5"	7'-6"	-	-	-	-
		22'	1'-0"	1'-0"	2'-10"	6'-2"	-	-	-	8'-11"	1'-0"	3'-3"	6'-0"	9'-4"	-	-	-	-
		24'	1'-0"	1'-3"	4'-3"	7'-3"	-	-	-	10'-4"	1'-9"	4'-9"	7'-9"	10'-10"	-	-	-	-
		26'	1'-0"	2'-8"	5'-3"	8'-6"	-	-	-	11'-10"	3'-2"	5'-10"	9'-1"	12'-4"	-	-	-	-
		28'	1'-0"	3'-7"	6'-4"	9'-11"	-	-	-	13'-5"	4'-10"	7'-8"	10'-6"	14'-0"	-	-	-	-
14	LPI 30A	8'	1'-0"	1'-0"	1'-6"	2'-0"	2'-6"	-	-	1'-0"	1'-0"	1'-0"	1'-6"	2'-0"	2'-6"	-	-	1'-11"
		10'	1'-0"	1'-0"	1'-6"	2'-0"	2'-6"	-	-	2'-1"	1'-0"	1'-0"	1'-6"	2'-0"	2'-6"	-	-	3'-6"
		12'	1'-0"	1'-0"	1'-6"	2'-0"	2'-6"	-	-	3'-5"	1'-0"	1'-0"	1'-6"	2'-0"	2'-6"	-	-	5'-1"
		14'	1'-0"	1'-0"	1'-6"	2'-0"	2'-6"	-	-	4'-8"	1'-0"	1'-0"	1'-6"	2'-0"	3'-1"	-	-	6'-8"
		16'	1'-0"	1'-0"	1'-6"	2'-0"	2'-6"	-	-	5'-8"	1'-0"	1'-0"	1'-6"	3'-2"	4'-9"	-	-	-
		18'	1'-0"	1'-0"	1'-6"	2'-0"	3'-8"	-	-	7'-4"	1'-0"	1'-9"	3'-1"	4'-5"	6'-3"	-	-	-
		20'	1'-0"	1'-0"	1'-7"	3'-1"	4'-7"	-	-	8'-7"	1'-5"	2'-11"	4'-5"	6'-0"	7'-6"	-	-	-
		22'	1'-0"	1'-2"	2'-10"	4'-6"	6'-2"	-	-	10'-0"	2'-8"	4'-4"	6'-0"	7'-8"	9'-4"	-	-	-
		24'	1'-3"	2'-5"	3'-8"	5'-6"	7'-3"	-	-	11'-6"	4'-2"	5'-4"	7'-2"	9'-0"	10'-10"	-	-	-
		26'	2'-0"	3'-4"	5'-3"	6'-7"	8'-6"	-	-	-	5'-10"	7'-1"	8'-5"	10'-5"	12'-4"	-	-	-
		28'	2'-10"	5'-0"	6'-4"	7'-9"	9'-11"	-	-	-	6'-11"	8'-4"	10'-6"	11'-11"	14'-0"	-	-	-
	LPI 36A 56A	8'	1'-0"	1'-0"	1'-6"	2'-0"	2'-6"	-	-	1'-0"	1'-0"	1'-0"	1'-6"	2'-0"	2'-6"	-	-	1'-4"
		10'	1'-0"	1'-0"	1'-6"	2'-0"	2'-6"	-	-	1'-4"	1'-0"	1'-0"	1'-6"	2'-0"	2'-6"	-	-	2'-8"
		12'	1'-0"	1'-0"	1'-6"	2'-0"	2'-6"	-	-	2'-6"	1'-0"	1'-0"	1'-6"	2'-0"	2'-6"	-	-	4'-2"
		14'	1'-0"	1'-0"	1'-6"	2'-0"	2'-6"	-	-	3'-11"	1'-0"	1'-0"	1'-6"	2'-0"	3'-10"	-	-	5'-11"
		16'	1'-0"	1'-0"	1'-6"	2'-0"	3'-3"	-	-	5'-3"	1'-0"	1'-0"	1'-6"	2'-9"	5'-7"	-	-	7'-7"
		18'	1'-0"	1'-0"	1'-6"	2'-0"	4'-7"	-	-	6'-5"	1'-0"	1'-0"	2'-2"	4'-5"	6'-9"	-	-	9'-0"
		20'	1'-0"	1'-0"	1'-6"	3'-1"	5'-7"	-	-	7'-7"	1'-0"	1'-0"	3'-5"	6'-0"	8'-6"	-	-	-
		22'	1'-0"	1'-0"	1'-8"	4'-6"	6'-8"	-	-	8'-11"	1'-0"	2'-8"	4'-11"	7'-1"	9'-11"	-	-	-
		24'	1'-0"	1'-0"	3'-1"	5'-6"	7'-11"	-	-	10'-4"	1'-9"	3'-6"	5'-11"	9'-0"	12'-0"	-	-	-
		26'	1'-0"	2'-0"	4'-0"	6'-7"	9'-2"	-	-	11'-10"	3'-2"	5'-2"	7'-9"	10'-5"	-	-	-	-
		28'	1'-0"	2'-10"	5'-0"	7'-9"	10'-7"	-	-	13'-5"	4'-2"	6'-11"	9'-1"	11'-11"	-	-	-	-
		30'	1'-7"	3'-10"	6'-1"	9'-1"	12'-1"	-	-	14'-4"	5'-11"	8'-2"	10'-6"	13'-6"	-	-	-	-

Table 7. Circular Web Hole Chart for LPI Joists: 40 psf Live Load, 15 psf Dead Load, up to 24” OC (Cont’d)

Joist Depth (in.)	Joist Series	Clear Span	Circular Holes (including Obround Holes)															
			Distance from End Suport								Distance from Interior Support or Cantilever-End Support							
			Hole Diameter							Obround	Hole Diameter							Obround
			2"	4"	6"	8"	10"	12"	14"	Hole	2"	4"	6"	8"	10"	12"	14"	Hole
16	LPI 30A	8'	1'-0"	1'-0"	1'-6"	2'-0"	2'-6"	3'-0"	-	1'-0"	1'-0"	1'-0"	1'-6"	2'-0"	2'-6"	3'-0"	-	1'-11"
		10'	1'-0"	1'-0"	1'-6"	2'-0"	2'-6"	3'-0"	-	2'-1"	1'-0"	1'-0"	1'-6"	2'-0"	2'-6"	3'-0"	-	3'-6"
		12'	1'-0"	1'-0"	1'-6"	2'-0"	2'-6"	3'-0"	-	3'-5"	1'-0"	1'-0"	1'-6"	2'-0"	2'-6"	3'-0"	-	5'-1"
		14'	1'-0"	1'-0"	1'-6"	2'-0"	2'-6"	3'-0"	-	4'-8"	1'-0"	1'-0"	1'-6"	2'-0"	2'-6"	3'-5"	-	6'-8"
		16'	1'-0"	1'-0"	1'-6"	2'-0"	2'-6"	3'-0"	-	5'-8"	1'-0"	1'-0"	1'-6"	2'-4"	3'-7"	5'-2"	-	-
		18'	1'-0"	1'-0"	1'-6"	2'-0"	2'-9"	4'-1"	-	7'-4"	1'-0"	1'-3"	2'-2"	3'-6"	4'-11"	6'-9"	-	-
		20'	1'-0"	1'-0"	1'-6"	2'-7"	3'-7"	5'-1"	-	8'-7"	1'-5"	2'-5"	3'-11"	4'-11"	6'-6"	8'-0"	-	-
		22'	1'-0"	1'-2"	2'-3"	3'-4"	5'-0"	6'-8"	-	10'-0"	2'-8"	3'-9"	5'-5"	6'-7"	8'-3"	9'-11"	-	-
		24'	1'-0"	1'-10"	3'-1"	4'-10"	6'-1"	7'-11"	-	11'-6"	4'-2"	5'-4"	6'-7"	8'-4"	9'-7"	11'-5"	-	-
		26'	2'-0"	3'-4"	4'-7"	5'-11"	7'-3"	9'-2"	-	-	5'-2"	6'-5"	8'-5"	9'-9"	11'-0"	13'-0"	-	-
		28'	2'-10"	4'-3"	5'-8"	7'-1"	8'-6"	10'-7"	-	-	6'-11"	8'-4"	9'-9"	11'-2"	12'-7"	-	-	-
		30'	3'-10"	5'-4"	6'-10"	8'-4"	9'-10"	11'-4"	-	-	8'-2"	9'-9"	11'-3"	12'-9"	14'-3"	-	-	-
	LPI 36A 56A	8'	1'-0"	1'-0"	1'-6"	2'-0"	2'-6"	3'-0"	-	1'-0"	1'-0"	1'-0"	1'-6"	2'-0"	2'-6"	3'-0"	-	1'-4"
		10'	1'-0"	1'-0"	1'-6"	2'-0"	2'-6"	3'-0"	-	1'-4"	1'-0"	1'-0"	1'-6"	2'-0"	2'-6"	3'-0"	-	2'-8"
		12'	1'-0"	1'-0"	1'-6"	2'-0"	2'-6"	3'-0"	-	2'-6"	1'-0"	1'-0"	1'-6"	2'-0"	2'-6"	3'-0"	-	4'-2"
		14'	1'-0"	1'-0"	1'-6"	2'-0"	2'-6"	3'-0"	-	3'-11"	1'-0"	1'-0"	1'-6"	2'-0"	2'-6"	4'-6"	-	5'-11"
		16'	1'-0"	1'-0"	1'-6"	2'-0"	2'-6"	3'-8"	-	5'-3"	1'-0"	1'-0"	1'-6"	2'-0"	3'-11"	6'-0"	-	7'-7"
		18'	1'-0"	1'-0"	1'-6"	2'-0"	2'-9"	5'-0"	-	6'-5"	1'-0"	1'-0"	1'-6"	3'-1"	5'-4"	7'-8"	-	9'-0"
		20'	1'-0"	1'-0"	1'-6"	2'-1"	4'-1"	6'-1"	-	7'-7"	1'-0"	1'-0"	2'-5"	4'-5"	7'-0"	9'-6"	-	-
		22'	1'-0"	1'-0"	1'-6"	2'-10"	5'-0"	7'-10"	-	8'-11"	1'-0"	2'-1"	3'-9"	6'-0"	8'-3"	11'-0"	-	-
		24'	1'-0"	1'-0"	1'-10"	4'-3"	6'-8"	9'-1"	-	10'-4"	1'-1"	3'-6"	5'-4"	7'-9"	9'-7"	-	-	-
		26'	1'-0"	1'-4"	3'-4"	5'-3"	7'-11"	10'-6"	-	11'-10"	2'-6"	4'-6"	6'-5"	9'-1"	11'-8"	-	-	-
		28'	1'-0"	2'-2"	4'-3"	6'-4"	9'-2"	12'-0"	-	13'-5"	4'-2"	6'-3"	8'-4"	10'-6"	13'-4"	-	-	-
		30'	1'-7"	3'-1"	5'-4"	7'-7"	10'-7"	12'-10"	-	14'-4"	5'-2"	7'-5"	9'-9"	12'-0"	15'-0"	-	-	-
18	LPI 36A 56A	12'	1'-0"	1'-0"	1'-6"	2'-0"	2'-6"	3'-0"	3'-6"	-	1'-0"	1'-0"	1'-6"	2'-0"	2'-6"	3'-0"	3'-6"	-
		14'	1'-0"	1'-0"	1'-6"	2'-0"	2'-6"	3'-0"	3'-6"	-	1'-0"	1'-0"	1'-6"	2'-0"	2'-6"	3'-0"	3'-6"	-
		16'	1'-0"	1'-0"	1'-6"	2'-0"	2'-6"	3'-0"	3'-6"	-	1'-0"	1'-0"	1'-6"	2'-0"	2'-6"	3'-0"	4'-9"	-
		18'	1'-0"	1'-0"	1'-6"	2'-0"	2'-6"	3'-0"	3'-8"	-	1'-0"	1'-0"	1'-6"	2'-0"	2'-6"	3'-7"	6'-3"	-
		20'	1'-0"	1'-0"	1'-6"	2'-0"	2'-6"	3'-0"	5'-1"	-	1'-0"	1'-0"	1'-6"	2'-0"	2'-6"	5'-0"	8'-0"	-
		22'	1'-0"	1'-0"	1'-6"	2'-0"	2'-6"	3'-4"	6'-2"	-	1'-0"	1'-0"	1'-6"	2'-0"	3'-3"	6'-0"	9'-4"	-
		24'	1'-0"	1'-0"	1'-6"	2'-0"	2'-6"	4'-3"	7'-4"	-	1'-0"	1'-0"	1'-6"	2'-4"	4'-9"	7'-9"	10'-10"	-
		26'	1'-0"	1'-0"	1'-6"	2'-0"	2'-8"	5'-3"	8'-7"	-	1'-0"	1'-0"	1'-6"	3'-2"	6'-5"	9'-1"	13'-0"	-
		28'	1'-0"	1'-0"	1'-6"	2'-0"	3'-7"	6'-5"	9'-11"	-	1'-0"	1'-0"	2'-0"	4'-10"	7'-8"	10'-6"	-	-
		30'	1'-0"	1'-0"	1'-6"	2'-4"	4'-7"	7'-7"	11'-4"	-	1'-0"	1'-0"	3'-8"	5'-11"	9'-0"	12'-0"	-	-
		32'	1'-0"	1'-0"	1'-6"	3'-3"	5'-8"	8'-11"	12'-11"	-	1'-0"	2'-4"	4'-9"	7'-2"	10'-5"	13'-7"	-	-
		34'	1'-0"	1'-0"	1'-9"	4'-4"	6'-11"	10'-4"	14'-7"	-	1'-0"	3'-4"	5'-11"	9'-4"	11'-11"	15'-4"	-	-
20	LPI 36A 56A	12'	1'-0"	1'-0"	1'-6"	2'-0"	2'-6"	3'-0"	3'-6"	-	1'-0"	1'-0"	1'-6"	2'-0"	2'-6"	3'-0"	3'-6"	-
		14'	1'-0"	1'-0"	1'-6"	2'-0"	2'-6"	3'-0"	3'-6"	-	1'-0"	1'-0"	1'-6"	2'-0"	2'-6"	3'-0"	3'-6"	-
		16'	1'-0"	1'-0"	1'-6"	2'-0"	2'-6"	3'-0"	3'-6"	-	1'-0"	1'-0"	1'-6"	2'-0"	2'-6"	3'-0"	3'-6"	-
		18'	1'-0"	1'-0"	1'-6"	2'-0"	2'-6"	3'-0"	3'-6"	-	1'-0"	1'-0"	1'-6"	2'-0"	2'-6"	3'-0"	4'-0"	-
		20'	1'-0"	1'-0"	1'-6"	2'-0"	2'-6"	3'-0"	3'-6"	-	1'-0"	1'-0"	1'-6"	2'-0"	2'-6"	3'-0"	5'-6"	-
		22'	1'-0"	1'-0"	1'-6"	2'-0"	2'-6"	3'-0"	3'-11"	-	1'-0"	1'-0"	1'-6"	2'-0"	2'-6"	4'-4"	7'-2"	-
		24'	1'-0"	1'-0"	1'-6"	2'-0"	2'-6"	3'-0"	5'-6"	-	1'-0"	1'-0"	1'-6"	2'-0"	3'-6"	6'-0"	8'-5"	-
		26'	1'-0"	1'-0"	1'-6"	2'-0"	2'-6"	4'-0"	6'-7"	-	1'-0"	1'-0"	1'-6"	2'-6"	4'-6"	7'-1"	10'-5"	-
		28'	1'-0"	1'-0"	1'-6"	2'-0"	2'-6"	5'-0"	7'-10"	-	1'-0"	1'-0"	1'-6"	3'-5"	6'-3"	9'-1"	11'-11"	-
		30'	1'-0"	1'-0"	1'-6"	2'-0"	3'-10"	6'-1"	9'-1"	-	1'-0"	1'-0"	2'-11"	5'-2"	7'-5"	10'-6"	13'-6"	-
		32'	1'-0"	1'-0"	1'-6"	2'-5"	4'-10"	7'-3"	10'-6"	-	1'-0"	1'-6"	3'-11"	6'-4"	8'-9"	12'-0"	15'-3"	-
		34'	1'-0"	1'-0"	1'-6"	3'-6"	6'-0"	8'-7"	11'-2"	-	1'-0"	2'-6"	5'-0"	7'-7"	10'-2"	13'-7"	17'-0"	-
22	LPI 36A 56A	16'	1'-0"	1'-0"	1'-6"	2'-0"	2'-6"	3'-0"	3'-6"	-	1'-0"	1'-0"	1'-6"	2'-0"	2'-6"	3'-0"	3'-6"	-
		18'	1'-0"	1'-0"	1'-6"	2'-0"	2'-6"	3'-0"	3'-6"	-	1'-0"	1'-0"	1'-6"	2'-0"	2'-6"	3'-0"	3'-6"	-
		20'	1'-0"	1'-0"	1'-6"	2'-0"	2'-6"	3'-0"	3'-6"	-	1'-0"	1'-0"	1'-6"	2'-0"	2'-6"	3'-0"	3'-11"	-
		22'	1'-0"	1'-0"	1'-6"	2'-0"	2'-6"	3'-0"	3'-6"	-	1'-0"	1'-0"	1'-6"	2'-0"	2'-6"	3'-3"	5'-5"	-
		24'	1'-0"	1'-0"	1'-6"	2'-0"	2'-6"	3'-0"	3'-8"	-	1'-0"	1'-0"	1'-6"	2'-0"	2'-6"	4'-9"	6'-7"	-
		26'	1'-0"	1'-0"	1'-6"	2'-0"	2'-6"	3'-0"	4'-8"	-	1'-0"	1'-0"	1'-6"	2'-0"	3'-10"	5'-10"	8'-5"	-
		28'	1'-0"	1'-0"	1'-6"	2'-0"	2'-6"	3'-7"	5'-8"	-	1'-0"	1'-0"	1'-6"	2'-9"	4'-10"	7'-8"	9'-9"	-
		30'	1'-0"	1'-0"	1'-6"	2'-0"	2'-6"	4'-7"	6'-10"	-	1'-0"	1'-0"	2'-2"	4'-5"	6'-8"	9'-0"	11'-3"	-
		32'	1'-0"	1'-0"	1'-6"	2'-0"	3'-3"	5'-8"	8'-1"	-	1'-0"	1'-6"	3'-1"	5'-6"	8'-0"	10'-5"	12'-10"	-
		34'	1'-0"	1'-0"	1'-6"	2'-7"	4'-4"	6'-11"	9'-5"	-	1'-0"	2'-6"	5'-0"	6'-9"	9'-4"	11'-11"	14'-5"	-
		36'	1'-0"	1'-0"	1'-6"	3'-8"	5'-6"	8'-2"	10'-11"	-	1'-8"	3'-6"	6'-3"	8'-1"	10'-9"	13'-6"	16'-3"	-
		38'	1'-0"	1'-0"	1'-11"	4'-10"	6'-9"	9'-7"	12'-6"	-	2'-9"	4'-8"	7'-7"	9'-5"	12'-4"	15'-2"	18'-1"	-
24	LPI 36A 56A	16'	1'-0"	1'-0"	1'-6"	2'-0"	2'-6"	3'-0"	3'-6"	-	1'-0"	1'-0"	1'-6"	2'-0"	2'-6"	3'-0"	3'-6"	-
		18'	1'-0"	1'-0"	1'-6"	2'-0"	2'-6"	3'-0"	3'-6"	-	1'-0"	1'-0"	1'-6"	2'-0"	2'-6"	3'-0"	3'-6"	-
		20'	1'-0"	1'-0"	1'-6"	2'-0"	2'-6"	3'-0"	3'-6"	-	1'-0"	1'-0"	1'-6"	2'-0"	2'-6"	3'-0"	3'-6"	-
		22'	1'-0"	1'-0"	1'-6"	2'-0"	2'-6"	3'-0"	3'-6"	-	1'-0"	1'-0"	1'-6"	2'-0"	2'-6"	3'-0"	3'-9"	-
		24'	1'-0"	1'-0"	1'-6"	2'-0"	2'-6"	3'-0"	3'-6"	-	1'-0"	1'-0"	1'-6"	2'-0"	2'-6"	3'-6"	5'-4"	-
		26'	1'-0"	1'-0"	1'-6"	2'-0"	2'-6"	3'-0"	3'-6"	-	1'-0"	1'-0"	1'-6"	2'-0"	2'-6"	4'-6"	7'-1"	-
		28'	1'-0"	1'-0"	1'-6"	2'-0"	2'-6"	3'-0"	4'-3"	-	1'-0"	1'-0"	1'-6"	2'-0"	4'-2"	6'-3"	8'-4"	-
		30'	1'-0"	1'-0"	1'-6"	2'-0"	2'-6"	3'-10"	5'-4"	-	1'-0"	1'-0"	1'-6"	3'-8"	5'-2"	7'-5"	9'-9"	-
		32'	1'-0"	1'-0"	1'-6"	2'-0"	2'-6"	4'-10"	6'-6"	-	1'-0"	1'-0"	3'-1"	4'-9"	7'-2"	8'-9"	11'-2"	-
		34'	1'-0"	1'-0"	1'-6"	2'-0"	3'-6"	6'-0"	7'-9"	-	1'-0"	2'-6"	4'-2"	5'-11"	8'-5"	10'-2"	12'-9"	-
		36'	1'-0"	1'-0"	1'-6"	2'-9"	4'-7"	7'-3"	9'-1"	-	1'-8"	3'-6"	5'-4"	7'-2"	9'-10"	11'-8"	14'-5"	-
		38'	1'-0"	1'-0"	1'-11"	3'-10"	5'-9"	7'-8"	10'-7"	-	2'-9"	4'-8"	6'-7"	8'-6"	11'-4"	13'-3"	16'-2"	-

Table 8. Rectangular Web Hole Chart for LPI Joists: 40 psf Live Load, 15 psf Dead Load, up to 24” OC

Joist Depth (in.)	Joist Series	Clear Span	Rectangular Holes																	
			Distance from End Suport									Distance from Interior Support or Cantilever-End Support								
			Maximum Hole Dimension: Depth or Width									Maximum Hole Dimension: Depth or Width								
			2"	4"	6"	8"	10"	12"	14"	16"	18"	2"	4"	6"	8"	10"	12"	14"	16"	18"
9 1/2	LPI 100 125 150	6'	1'-0"	1'-0"	1'-6"	2'-0"	2'-6"	3'-0"	-	-	-	1'-0"	1'-0"	1'-6"	2'-0"	2'-6"	3'-0"	-	-	-
		8'	1'-0"	1'-0"	1'-6"	2'-0"	2'-6"	3'-0"	3'-6"	4'-0"	-	1'-0"	1'-0"	2'-7"	3'-0"	3'-5"	3'-10"	-	-	-
		10'	1'-0"	1'-1"	2'-7"	3'-1"	3'-7"	4'-1"	4'-7"	-	-	1'-0"	2'-5"	4'-0"	4'-6"	5'-0"	-	-	-	-
		12'	1'-0"	2'-2"	3'-8"	4'-4"	4'-11"	5'-6"	-	-	-	2'-4"	3'-10"	5'-8"	6'-0"	-	-	-	-	-
		14'	1'-10"	3'-3"	5'-0"	5'-8"	6'-1"	6'-9"	-	-	-	3'-10"	5'-3"	-	-	-	-	-	-	-
		16'	2'-10"	4'-6"	6'-6"	6'-11"	7'-9"	-	-	-	-	5'-2"	6'-9"	-	-	-	-	-	-	-
		18'	4'-1"	5'-11"	7'-9"	8'-2"	-	-	-	-	-	6'-9"	8'-7"	-	-	-	-	-	-	-
	LPI 200 225 250	6'	1'-0"	1'-0"	1'-6"	2'-0"	2'-6"	3'-0"	-	-	-	1'-0"	1'-0"	1'-6"	2'-0"	2'-6"	3'-0"	-	-	-
		8'	1'-0"	1'-0"	1'-6"	2'-0"	2'-6"	3'-0"	3'-6"	4'-0"	-	1'-0"	1'-0"	2'-7"	3'-0"	3'-5"	3'-10"	-	-	-
		10'	1'-0"	1'-1"	2'-7"	3'-1"	3'-7"	4'-1"	4'-7"	-	-	1'-0"	2'-5"	4'-0"	4'-6"	5'-0"	-	-	-	-
		12'	1'-0"	2'-2"	3'-8"	4'-4"	4'-11"	5'-6"	-	-	-	2'-4"	3'-10"	5'-8"	6'-0"	-	-	-	-	-
		14'	1'-10"	3'-3"	5'-0"	5'-8"	6'-1"	6'-9"	-	-	-	3'-10"	5'-3"	-	-	-	-	-	-	-
		16'	2'-10"	4'-6"	6'-6"	6'-11"	7'-9"	-	-	-	-	5'-2"	6'-9"	-	-	-	-	-	-	-
		18'	4'-1"	5'-11"	7'-9"	8'-2"	-	-	-	-	-	6'-9"	8'-7"	-	-	-	-	-	-	-
	LPI 300 325	6'	1'-0"	1'-0"	1'-6"	2'-0"	2'-6"	3'-0"	-	-	-	1'-0"	1'-0"	1'-6"	2'-0"	2'-6"	3'-0"	-	-	-
		8'	1'-0"	1'-0"	1'-6"	2'-0"	2'-6"	3'-0"	3'-6"	4'-0"	-	1'-0"	1'-0"	2'-7"	3'-0"	3'-5"	3'-10"	-	-	-
		10'	1'-0"	1'-1"	2'-7"	3'-1"	3'-7"	4'-1"	4'-7"	-	-	1'-0"	2'-5"	4'-0"	4'-6"	5'-0"	-	-	-	-
		12'	1'-0"	2'-2"	3'-8"	4'-4"	4'-11"	5'-6"	-	-	-	2'-4"	3'-10"	5'-8"	6'-0"	-	-	-	-	-
		14'	1'-10"	3'-3"	5'-0"	5'-8"	6'-1"	6'-9"	-	-	-	3'-10"	5'-3"	-	-	-	-	-	-	-
		16'	2'-10"	4'-6"	6'-6"	6'-11"	7'-9"	-	-	-	-	5'-2"	6'-9"	-	-	-	-	-	-	-
		18'	4'-1"	5'-11"	7'-9"	8'-2"	-	-	-	-	-	6'-9"	8'-7"	-	-	-	-	-	-	-
		20'	5'-1"	7'-1"	9'-1"	9'-7"	-	-	-	-	-	8'-0"	10'-0"	-	-	-	-	-	-	-
11 7/8	LPI 100 125 150	6'	1'-0"	1'-0"	1'-6"	2'-0"	2'-6"	3'-0"	-	-	-	1'-0"	1'-0"	1'-6"	2'-0"	2'-6"	3'-0"	-	-	-
		8'	1'-0"	1'-0"	1'-6"	2'-1"	2'-6"	3'-0"	3'-6"	-	-	1'-0"	1'-0"	1'-9"	3'-2"	3'-7"	-	-	-	-
		10'	1'-0"	1'-0"	1'-10"	3'-4"	3'-10"	4'-4"	4'-10"	-	-	1'-0"	1'-11"	3'-3"	4'-9"	-	-	-	-	-
		12'	1'-0"	1'-7"	3'-1"	4'-7"	5'-2"	5'-10"	-	-	-	2'-0"	3'-3"	4'-9"	-	-	-	-	-	-
		14'	1'-5"	2'-10"	4'-3"	6'-1"	6'-5"	-	-	-	-	3'-5"	4'-10"	6'-4"	-	-	-	-	-	-
		16'	2'-6"	4'-1"	5'-8"	7'-4"	-	-	-	-	-	4'-9"	6'-5"	8'-0"	-	-	-	-	-	-
		18'	3'-8"	5'-6"	6'-10"	8'-8"	-	-	-	-	-	6'-3"	8'-1"	-	-	-	-	-	-	-
		20'	5'-1"	6'-7"	8'-1"	-	-	-	-	-	-	8'-0"	9'-6"	-	-	-	-	-	-	-
		22'	6'-2"	7'-10"	9'-5"	-	-	-	-	-	-	9'-4"	11'-0"	-	-	-	-	-	-	-
	LPI 200 225 250	6'	1'-0"	1'-0"	1'-6"	2'-0"	2'-6"	3'-0"	-	-	-	1'-0"	1'-0"	1'-6"	2'-0"	2'-6"	3'-0"	-	-	-
		8'	1'-0"	1'-0"	1'-6"	2'-1"	2'-6"	3'-0"	3'-6"	-	-	1'-0"	1'-0"	1'-9"	3'-2"	3'-7"	-	-	-	-
		10'	1'-0"	1'-0"	1'-10"	3'-4"	3'-10"	4'-4"	4'-10"	-	-	1'-0"	1'-11"	3'-3"	4'-9"	-	-	-	-	-
		12'	1'-0"	1'-7"	3'-1"	4'-7"	5'-2"	5'-10"	-	-	-	2'-0"	3'-3"	4'-9"	-	-	-	-	-	-
		14'	1'-5"	2'-10"	4'-3"	6'-1"	6'-5"	-	-	-	-	3'-5"	4'-10"	6'-4"	-	-	-	-	-	-
		16'	2'-6"	4'-1"	5'-8"	7'-4"	-	-	-	-	-	4'-9"	6'-5"	8'-0"	-	-	-	-	-	-
		18'	3'-8"	5'-6"	6'-10"	8'-8"	-	-	-	-	-	6'-3"	8'-1"	-	-	-	-	-	-	-
		20'	5'-1"	6'-7"	8'-1"	-	-	-	-	-	-	8'-0"	9'-6"	-	-	-	-	-	-	-
		22'	6'-2"	7'-10"	9'-5"	-	-	-	-	-	-	9'-4"	11'-0"	-	-	-	-	-	-	-
	LPI 300 325 350	6'	1'-0"	1'-0"	1'-6"	2'-0"	2'-6"	3'-0"	-	-	-	1'-0"	1'-0"	1'-6"	2'-0"	2'-6"	3'-0"	-	-	-
		8'	1'-0"	1'-0"	1'-6"	2'-1"	2'-6"	3'-0"	3'-6"	-	-	1'-0"	1'-0"	1'-9"	3'-2"	3'-7"	-	-	-	-
		10'	1'-0"	1'-0"	1'-10"	3'-4"	3'-10"	4'-4"	4'-10"	-	-	1'-0"	1'-11"	3'-3"	4'-9"	-	-	-	-	-
		12'	1'-0"	1'-7"	3'-1"	4'-7"	5'-2"	5'-10"	-	-	-	2'-0"	3'-3"	4'-9"	-	-	-	-	-	-
		14'	1'-5"	2'-10"	4'-3"	6'-1"	6'-5"	-	-	-	-	3'-5"	4'-10"	6'-4"	-	-	-	-	-	-
		16'	2'-6"	4'-1"	5'-8"	7'-4"	-	-	-	-	-	4'-9"	6'-5"	8'-0"	-	-	-	-	-	-
		18'	3'-8"	5'-6"	6'-10"	8'-8"	-	-	-	-	-	6'-3"	8'-1"	-	-	-	-	-	-	-
		20'	5'-1"	6'-7"	8'-1"	-	-	-	-	-	-	8'-0"	9'-6"	-	-	-	-	-	-	-
		22'	6'-2"	7'-10"	9'-5"	-	-	-	-	-	-	9'-4"	11'-0"	-	-	-	-	-	-	-
		24'	7'-11"	9'-1"	10'-11"	-	-	-	-	-	-	11'-5"	-	-	-	-	-	-	-	-
	LPI 550	6'	1'-0"	1'-0"	1'-6"	2'-0"	2'-6"	3'-0"	-	-	-	1'-0"	1'-0"	1'-6"	2'-0"	2'-6"	3'-0"	-	-	-
		8'	1'-0"	1'-0"	1'-6"	2'-1"	2'-6"	3'-0"	3'-6"	-	-	1'-0"	1'-0"	1'-9"	3'-2"	3'-7"	-	-	-	-
		10'	1'-0"	1'-0"	1'-10"	3'-4"	3'-10"	4'-4"	4'-10"	-	-	1'-0"	1'-11"	3'-3"	4'-9"	-	-	-	-	-
		12'	1'-0"	1'-7"	3'-1"	4'-7"	5'-2"	5'-10"	-	-	-	2'-0"	3'-3"	4'-9"	-	-	-	-	-	-
		14'	1'-5"	2'-10"	4'-3"	6'-1"	6'-5"	-	-	-	-	3'-5"	4'-10"	6'-4"	-	-	-	-	-	-
		16'	2'-6"	4'-1"	5'-8"	7'-4"	-	-	-	-	-	4'-9"	6'-5"	8'-0"	-	-	-	-	-	-
		18'	3'-8"	5'-6"	6'-10"	8'-8"	-	-	-	-	-	6'-3"	8'-1"	-	-	-	-	-	-	-
		20'	5'-1"	6'-7"	8'-1"	-	-	-	-	-	-	8'-0"	9'-6"	-	-	-	-	-	-	-
		22'	6'-2"	7'-10"	9'-5"	-	-	-	-	-	-	9'-4"	11'-0"	-	-	-	-	-	-	-
		24'	7'-11"	9'-1"	10'-11"	-	-	-	-	-	-	11'-5"	-	-	-	-	-	-	-	-
		26'	9'-2"	10'-6"	12'-6"	-	-	-	-	-	-	13'-0"	-	-	-	-	-	-	-	-
		28'	9'-11"	12'-0"	-	-	-	-	-	-	-	-	-	-	-	-	-	-	-	-

Table 8. Rectangular Web Hole Chart for LPI Joists: 40 psf Live Load, 15 psf Dead Load, up to 24” OC (Cont’d)

Joist Depth (in.)	Joist Series	Clear Span	Rectangular Holes																	
			Distance from End Suport									Distance from Interior Support or Cantilever-End Support								
			Maximum Hole Dimension: Depth or Width									Maximum Hole Dimension: Depth or Width								
			2"	4"	6"	8"	10"	12"	14"	16"	18"	2"	4"	6"	8"	10"	12"	14"	16"	18"
14	LPI 200 225 250	8'	1'-0"	1'-0"	1'-6"	2'-0"	2'-6"	3'-0"	3'-6"	4'-0"	-	1'-0"	1'-0"	1'-6"	2'-0"	2'-6"	3'-0"	3'-10"	-	-
		10'	1'-0"	1'-0"	1'-6"	2'-0"	2'-7"	3'-1"	3'-10"	4'-10"	-	1'-0"	1'-0"	1'-6"	2'-0"	4'-0"	4'-9"	-	-	-
		12'	1'-0"	1'-0"	1'-6"	2'-0"	3'-8"	4'-7"	5'-2"	-	-	1'-0"	1'-0"	1'-6"	3'-3"	5'-5"	-	-	-	-
		14'	1'-0"	1'-0"	1'-6"	2'-10"	5'-0"	5'-8"	6'-9"	-	-	1'-0"	1'-0"	2'-9"	4'-10"	7'-0"	-	-	-	-
		16'	1'-0"	1'-0"	2'-1"	4'-1"	6'-6"	7'-4"	-	-	-	1'-0"	2'-4"	3'-11"	6'-5"	-	-	-	-	-
		18'	1'-0"	1'-5"	3'-3"	5'-0"	7'-9"	8'-8"	-	-	-	1'-9"	3'-6"	5'-10"	8'-1"	-	-	-	-	-
		20'	1'-0"	2'-7"	4'-1"	6'-7"	9'-1"	-	-	-	-	2'-11"	4'-11"	7'-0"	9'-6"	-	-	-	-	-
		22'	1'-8"	3'-4"	5'-7"	7'-10"	10'-7"	-	-	-	-	4'-4"	6'-7"	8'-9"	11'-0"	-	-	-	-	-
		24'	2'-5"	4'-10"	6'-8"	9'-1"	-	-	-	-	-	5'-11"	7'-9"	10'-2"	-	-	-	-	-	-
		26'	4'-0"	5'-11"	7'-11"	10'-6"	-	-	-	-	-	7'-1"	9'-9"	11'-8"	-	-	-	-	-	-
	LPI 300 325 350 550	8'	1'-0"	1'-0"	1'-6"	2'-0"	2'-6"	3'-0"	3'-6"	4'-0"	-	1'-0"	1'-0"	1'-6"	2'-0"	2'-6"	3'-0"	3'-10"	-	-
		10'	1'-0"	1'-0"	1'-6"	2'-0"	2'-7"	3'-1"	3'-10"	4'-10"	-	1'-0"	1'-0"	1'-6"	2'-0"	4'-0"	4'-9"	-	-	-
		12'	1'-0"	1'-0"	1'-6"	2'-0"	3'-8"	4'-7"	5'-2"	-	-	1'-0"	1'-0"	1'-6"	3'-3"	5'-5"	-	-	-	-
		14'	1'-0"	1'-0"	1'-6"	2'-10"	5'-0"	5'-8"	6'-9"	-	-	1'-0"	1'-0"	2'-9"	4'-10"	7'-0"	-	-	-	-
		16'	1'-0"	1'-0"	2'-1"	4'-1"	6'-6"	7'-4"	-	-	-	1'-0"	2'-4"	3'-11"	6'-5"	-	-	-	-	-
		18'	1'-0"	1'-5"	3'-3"	5'-0"	7'-9"	8'-8"	-	-	-	1'-9"	3'-6"	5'-10"	8'-1"	-	-	-	-	-
		20'	1'-0"	2'-7"	4'-1"	6'-7"	9'-1"	-	-	-	-	2'-11"	4'-11"	7'-0"	9'-6"	-	-	-	-	-
		22'	1'-8"	3'-4"	5'-7"	7'-10"	10'-7"	-	-	-	-	4'-4"	6'-7"	8'-9"	11'-0"	-	-	-	-	-
		24'	2'-5"	4'-10"	6'-8"	9'-1"	-	-	-	-	-	5'-11"	7'-9"	10'-2"	-	-	-	-	-	-
		26'	4'-0"	5'-11"	7'-11"	10'-6"	-	-	-	-	-	7'-1"	9'-9"	11'-8"	-	-	-	-	-	-
		28'	5'-0"	7'-1"	9'-2"	12'-0"	-	-	-	-	-	9'-1"	11'-2"	13'-4"	-	-	-	-	-	-
		30'	6'-1"	8'-4"	10'-7"	13'-7"	-	-	-	-	-	10'-6"	12'-9"	15'-0"	-	-	-	-	-	-
16	LPI 200 225 250	8'	1'-0"	1'-0"	1'-6"	2'-0"	2'-6"	3'-0"	3'-6"	4'-0"	-	1'-0"	1'-0"	1'-6"	2'-0"	2'-6"	3'-5"	-	-	-
		10'	1'-0"	1'-0"	1'-6"	2'-0"	2'-6"	3'-7"	4'-4"	-	-	1'-0"	1'-0"	1'-6"	2'-0"	3'-0"	5'-0"	-	-	-
		12'	1'-0"	1'-0"	1'-6"	2'-0"	2'-9"	4'-11"	5'-10"	-	-	1'-0"	1'-0"	1'-6"	2'-8"	4'-6"	-	-	-	-
		14'	1'-0"	1'-0"	1'-6"	2'-2"	3'-11"	6'-5"	-	-	-	1'-0"	1'-0"	2'-5"	4'-2"	5'-11"	-	-	-	-
		16'	1'-0"	1'-0"	1'-8"	3'-3"	5'-3"	7'-9"	-	-	-	1'-0"	1'-11"	3'-7"	5'-7"	7'-7"	-	-	-	-
		18'	1'-0"	1'-0"	2'-9"	4'-7"	6'-5"	-	-	-	-	1'-9"	3'-1"	4'-11"	7'-2"	-	-	-	-	-
		20'	1'-0"	2'-1"	3'-7"	5'-7"	8'-1"	-	-	-	-	2'-11"	4'-5"	6'-6"	8'-6"	-	-	-	-	-
		22'	1'-2"	3'-4"	5'-0"	7'-3"	9'-5"	-	-	-	-	4'-4"	6'-0"	8'-3"	10'-5"	-	-	-	-	-
		24'	2'-5"	4'-3"	6'-1"	8'-6"	10'-11"	-	-	-	-	5'-11"	7'-9"	9'-7"	12'-0"	-	-	-	-	-
		26'	3'-4"	5'-3"	7'-3"	9'-10"	11'-10"	-	-	-	-	7'-1"	9'-1"	11'-0"	-	-	-	-	-	-
		28'	5'-0"	6'-4"	8'-6"	11'-4"	13'-5"	-	-	-	-	8'-4"	10'-6"	12'-7"	-	-	-	-	-	-
		30'	6'-1"	7'-7"	9'-10"	12'-1"	-	-	-	-	-	10'-6"	12'-0"	14'-3"	-	-	-	-	-	-
	LPI 300 325 350 550	8'	1'-0"	1'-0"	1'-6"	2'-0"	2'-6"	3'-0"	3'-6"	4'-0"	-	1'-0"	1'-0"	1'-6"	2'-0"	2'-6"	3'-5"	-	-	-
		10'	1'-0"	1'-0"	1'-6"	2'-0"	2'-6"	3'-7"	4'-4"	-	-	1'-0"	1'-0"	1'-6"	2'-0"	3'-0"	5'-0"	-	-	-
		12'	1'-0"	1'-0"	1'-6"	2'-0"	2'-9"	4'-11"	5'-10"	-	-	1'-0"	1'-0"	1'-6"	2'-8"	4'-6"	-	-	-	-
		14'	1'-0"	1'-0"	1'-6"	2'-2"	3'-11"	6'-5"	-	-	-	1'-0"	1'-0"	2'-5"	4'-2"	5'-11"	-	-	-	-
		16'	1'-0"	1'-0"	1'-8"	3'-3"	5'-3"	7'-9"	-	-	-	1'-0"	1'-11"	3'-7"	5'-7"	7'-7"	-	-	-	-
		18'	1'-0"	1'-0"	2'-9"	4'-7"	6'-5"	-	-	-	-	1'-9"	3'-1"	4'-11"	7'-2"	-	-	-	-	-
		20'	1'-0"	2'-1"	3'-7"	5'-7"	8'-1"	-	-	-	-	2'-11"	4'-5"	6'-6"	8'-6"	-	-	-	-	-
		22'	1'-2"	3'-4"	5'-0"	7'-3"	9'-5"	-	-	-	-	4'-4"	6'-0"	8'-3"	10'-5"	-	-	-	-	-
		24'	2'-5"	4'-3"	6'-1"	8'-6"	10'-11"	-	-	-	-	5'-11"	7'-9"	9'-7"	12'-0"	-	-	-	-	-
		26'	3'-4"	5'-3"	7'-3"	9'-10"	11'-10"	-	-	-	-	7'-1"	9'-1"	11'-0"	-	-	-	-	-	-
		28'	5'-0"	6'-4"	8'-6"	11'-4"	13'-5"	-	-	-	-	8'-4"	10'-6"	12'-7"	-	-	-	-	-	-
		30'	6'-1"	7'-7"	9'-10"	12'-1"	-	-	-	-	-	10'-6"	12'-0"	14'-3"	-	-	-	-	-	-
9 1/2	LPI 26A	6'	1'-0"	1'-0"	1'-6"	2'-0"	2'-6"	3'-0"	-	-	-	1'-0"	1'-0"	1'-6"	2'-0"	2'-6"	3'-0"	-	-	-
		8'	1'-0"	1'-0"	1'-6"	2'-0"	2'-6"	3'-0"	3'-6"	4'-0"	-	1'-0"	1'-0"	1'-11"	2'-4"	2'-9"	3'-5"	4'-0"	-	-
		10'	1'-0"	1'-0"	1'-10"	2'-4"	3'-1"	3'-7"	4'-1"	4'-10"	-	1'-0"	1'-5"	3'-3"	4'-0"	4'-6"	5'-0"	-	-	-
		12'	1'-0"	1'-3"	3'-1"	3'-8"	4'-4"	4'-11"	5'-6"	-	-	1'-1"	2'-11"	4'-9"	5'-5"	6'-0"	-	-	-	-
		14'	1'-0"	2'-6"	4'-3"	5'-0"	5'-8"	6'-5"	-	-	-	2'-5"	4'-6"	6'-8"	7'-0"	-	-	-	-	-
		16'	1'-8"	3'-8"	5'-8"	6'-6"	6'-11"	7'-9"	-	-	-	3'-11"	6'-0"	8'-0"	-	-	-	-	-	-
		18'	2'-9"	5'-0"	6'-10"	7'-9"	8'-2"	-	-	-	-	5'-4"	7'-8"	-	-	-	-	-	-	-
	LPI 30A	6'	1'-0"	1'-0"	1'-6"	2'-0"	2'-6"	3'-0"	-	-	-	1'-0"	1'-0"	1'-6"	2'-0"	2'-6"	3'-0"	-	-	-
		8'	1'-0"	1'-0"	1'-6"	2'-0"	2'-6"	3'-0"	3'-6"	4'-0"	-	1'-0"	1'-0"	1'-11"	2'-4"	2'-9"	3'-5"	4'-0"	-	-
		10'	1'-0"	1'-0"	1'-10"	2'-4"	3'-1"	3'-7"	4'-1"	4'-10"	-	1'-0"	1'-5"	3'-3"	4'-0"	4'-6"	5'-0"	-	-	-
		12'	1'-0"	1'-3"	3'-1"	3'-8"	4'-4"	4'-11"	5'-6"	-	-	1'-1"	2'-11"	4'-9"	5'-5"	6'-0"	-	-	-	-
		14'	1'-0"	2'-6"	4'-3"	5'-0"	5'-8"	6'-5"	-	-	-	2'-5"	4'-6"	6'-8"	7'-0"	-	-	-	-	-
		16'	1'-8"	3'-8"	5'-8"	6'-6"	6'-11"	7'-9"	-	-	-	3'-11"	6'-0"	8'-0"	-	-	-	-	-	-
		18'	2'-9"	5'-0"	6'-10"	7'-9"	8'-2"	-	-	-	-	5'-4"	7'-8"	-	-	-	-	-	-	-

Table 8. Rectangular Web Hole Chart for LPI Joists: 40 psf Live Load, 15 psf Dead Load, up to 24” OC (Cont’d)

Joist Depth (in.)	Joist Series	Clear Span	Rectangular Holes																	
			Distance from End Suport									Distance from Interior Support or Cantilever-End Support								
			Maximum Hole Dimension: Depth or Width									Maximum Hole Dimension: Depth or Width								
			2"	4"	6"	8"	10"	12"	14"	16"	18"	2"	4"	6"	8"	10"	12"	14"	16"	18"
11 7/8	LPI 26A	6'	1'-0"	1'-0"	1'-6"	2'-0"	2'-6"	3'-0"	-	-	-	1'-0"	1'-0"	1'-6"	2'-0"	2'-6"	3'-0"	-	-	-
		8'	1'-0"	1'-0"	1'-6"	2'-0"	2'-6"	3'-0"	3'-6"	4'-0"	-	1'-0"	1'-0"	1'-6"	2'-7"	3'-2"	3'-10"	-	-	-
		10'	1'-0"	1'-0"	1'-6"	2'-10"	3'-4"	3'-10"	4'-7"	-	-	1'-0"	1'-0"	2'-5"	4'-3"	4'-9"	-	-	-	-
		12'	1'-0"	1'-0"	2'-2"	4'-0"	4'-7"	5'-2"	5'-10"	-	-	1'-0"	2'-4"	3'-10"	5'-8"	-	-	-	-	-
		14'	1'-0"	1'-10"	3'-7"	5'-4"	6'-1"	6'-9"	-	-	-	2'-5"	3'-10"	5'-7"	-	-	-	-	-	-
		16'	1'-8"	2'-10"	4'-11"	6'-6"	7'-4"	-	-	-	-	3'-7"	5'-2"	7'-2"	-	-	-	-	-	-
		18'	2'-9"	4'-1"	5'-11"	8'-2"	8'-8"	-	-	-	-	5'-4"	6'-9"	8'-7"	-	-	-	-	-	-
		20'	3'-7"	5'-7"	7'-7"	9'-7"	-	-	-	-	-	6'-6"	8'-6"	-	-	-	-	-	-	-
		22'	5'-0"	6'-8"	8'-11"	-	-	-	-	-	-	8'-3"	9'-11"	-	-	-	-	-	-	-
	LPI 30A	6'	1'-0"	1'-0"	1'-6"	2'-0"	2'-6"	3'-0"	-	-	-	1'-0"	1'-0"	1'-6"	2'-0"	2'-6"	3'-0"	-	-	-
		8'	1'-0"	1'-0"	1'-6"	2'-0"	2'-6"	3'-0"	3'-6"	4'-0"	-	1'-0"	1'-0"	1'-6"	2'-7"	3'-2"	3'-10"	-	-	-
		10'	1'-0"	1'-0"	1'-6"	2'-10"	3'-4"	3'-10"	4'-7"	-	-	1'-0"	1'-0"	2'-5"	4'-3"	4'-9"	-	-	-	-
		12'	1'-0"	1'-0"	2'-2"	4'-0"	4'-7"	5'-2"	5'-10"	-	-	1'-0"	2'-4"	3'-10"	5'-8"	-	-	-	-	-
		14'	1'-0"	1'-10"	3'-7"	5'-4"	6'-1"	6'-9"	-	-	-	2'-5"	3'-10"	5'-7"	-	-	-	-	-	-
		16'	1'-8"	2'-10"	4'-11"	6'-6"	7'-4"	-	-	-	-	3'-7"	5'-2"	7'-2"	-	-	-	-	-	-
		18'	2'-9"	4'-1"	5'-11"	8'-2"	8'-8"	-	-	-	-	5'-4"	6'-9"	8'-7"	-	-	-	-	-	-
		20'	3'-7"	5'-7"	7'-7"	9'-7"	-	-	-	-	-	6'-6"	8'-6"	-	-	-	-	-	-	-
		22'	5'-0"	6'-8"	8'-11"	-	-	-	-	-	-	8'-3"	9'-11"	-	-	-	-	-	-	-
	LPI 36A	6'	1'-0"	1'-0"	1'-6"	2'-0"	2'-6"	3'-0"	-	-	-	1'-0"	1'-0"	1'-6"	2'-0"	2'-6"	3'-0"	-	-	-
		8'	1'-0"	1'-0"	1'-6"	2'-0"	2'-6"	3'-0"	3'-6"	4'-0"	-	1'-0"	1'-0"	1'-6"	2'-7"	3'-2"	3'-10"	-	-	-
		10'	1'-0"	1'-0"	1'-6"	2'-10"	3'-4"	3'-10"	4'-7"	-	-	1'-0"	1'-0"	2'-5"	4'-3"	4'-9"	-	-	-	-
		12'	1'-0"	1'-0"	2'-2"	4'-0"	4'-7"	5'-2"	5'-10"	-	-	1'-0"	2'-4"	3'-10"	5'-8"	-	-	-	-	-
		14'	1'-0"	1'-10"	3'-7"	5'-4"	6'-1"	6'-9"	-	-	-	2'-5"	3'-10"	5'-7"	-	-	-	-	-	-
		16'	1'-8"	2'-10"	4'-11"	6'-6"	7'-4"	-	-	-	-	3'-7"	5'-2"	7'-2"	-	-	-	-	-	-
		18'	2'-9"	4'-1"	5'-11"	8'-2"	8'-8"	-	-	-	-	5'-4"	6'-9"	8'-7"	-	-	-	-	-	-
		20'	3'-7"	5'-7"	7'-7"	9'-7"	-	-	-	-	-	6'-6"	8'-6"	-	-	-	-	-	-	-
		22'	5'-0"	6'-8"	8'-11"	-	-	-	-	-	-	8'-3"	9'-11"	-	-	-	-	-	-	-
		24'	6'-1"	7'-11"	10'-4"	-	-	-	-	-	-	9'-7"	11'-5"	-	-	-	-	-	-	-
	LPI 56A	6'	1'-0"	1'-0"	1'-6"	2'-0"	2'-6"	3'-0"	-	-	-	1'-0"	1'-0"	1'-6"	2'-0"	2'-6"	3'-0"	-	-	-
		8'	1'-0"	1'-0"	1'-6"	2'-0"	2'-6"	3'-0"	3'-6"	4'-0"	-	1'-0"	1'-0"	1'-6"	2'-7"	3'-2"	3'-10"	-	-	-
		10'	1'-0"	1'-0"	1'-6"	2'-10"	3'-4"	3'-10"	4'-7"	-	-	1'-0"	1'-0"	2'-5"	4'-3"	4'-9"	-	-	-	-
		12'	1'-0"	1'-0"	2'-2"	4'-0"	4'-7"	5'-2"	5'-10"	-	-	1'-0"	2'-4"	3'-10"	5'-8"	-	-	-	-	-
		14'	1'-0"	1'-10"	3'-7"	5'-4"	6'-1"	6'-9"	-	-	-	2'-5"	3'-10"	5'-7"	-	-	-	-	-	-
		16'	1'-8"	2'-10"	4'-11"	6'-6"	7'-4"	-	-	-	-	3'-7"	5'-2"	7'-2"	-	-	-	-	-	-
		18'	2'-9"	4'-1"	5'-11"	8'-2"	8'-8"	-	-	-	-	5'-4"	6'-9"	8'-7"	-	-	-	-	-	-
		20'	3'-7"	5'-7"	7'-7"	9'-7"	-	-	-	-	-	6'-6"	8'-6"	-	-	-	-	-	-	-
		22'	5'-0"	6'-8"	8'-11"	-	-	-	-	-	-	8'-3"	9'-11"	-	-	-	-	-	-	-
		24'	6'-1"	7'-11"	10'-4"	-	-	-	-	-	-	9'-7"	11'-5"	-	-	-	-	-	-	-
		26'	7'-3"	9'-2"	11'-2"	-	-	-	-	-	-	11'-0"	13'-0"	-	-	-	-	-	-	-
		28'	8'-6"	10'-7"	12'-8"	-	-	-	-	-	-	12'-7"	-	-	-	-	-	-	-	-
14	LPI 30A	8'	1'-0"	1'-0"	1'-6"	2'-0"	2'-6"	3'-0"	3'-6"	4'-0"	-	1'-0"	1'-0"	1'-6"	2'-0"	2'-6"	3'-0"	3'-6"	-	-
		10'	1'-0"	1'-0"	1'-6"	2'-0"	2'-6"	3'-0"	3'-6"	4'-4"	-	1'-0"	1'-0"	1'-6"	2'-0"	3'-3"	4'-0"	5'-0"	-	-
		12'	1'-0"	1'-0"	1'-6"	2'-0"	3'-1"	4'-0"	4'-11"	5'-10"	-	1'-0"	1'-0"	1'-6"	2'-4"	4'-9"	5'-8"	-	-	-
		14'	1'-0"	1'-0"	1'-6"	2'-0"	4'-3"	5'-4"	6'-1"	-	-	1'-0"	1'-0"	1'-8"	3'-10"	6'-4"	-	-	-	-
		16'	1'-0"	1'-0"	1'-6"	2'-10"	5'-8"	6'-6"	7'-9"	-	-	1'-0"	1'-0"	2'-9"	5'-2"	8'-0"	-	-	-	-
		18'	1'-0"	1'-0"	1'-10"	4'-1"	6'-10"	7'-9"	-	-	-	1'-0"	2'-2"	4'-5"	6'-9"	-	-	-	-	-
		20'	1'-0"	1'-0"	3'-1"	5'-7"	8'-1"	9'-1"	-	-	-	1'-5"	3'-5"	6'-0"	8'-6"	-	-	-	-	-
		22'	1'-0"	1'-8"	3'-11"	6'-8"	9'-5"	10'-7"	-	-	-	2'-8"	4'-11"	7'-1"	9'-11"	-	-	-	-	-
		24'	1'-0"	3'-1"	5'-6"	7'-11"	10'-11"	-	-	-	-	4'-2"	6'-7"	9'-0"	11'-5"	-	-	-	-	-
		26'	2'-0"	4'-0"	6'-7"	9'-2"	12'-6"	-	-	-	-	5'-2"	7'-9"	10'-5"	13'-0"	-	-	-	-	-
		28'	2'-10"	5'-0"	7'-9"	10'-7"	-	-	-	-	-	6'-11"	9'-1"	11'-11"	-	-	-	-	-	-
	LPI 36A 56A	8'	1'-0"	1'-0"	1'-6"	2'-0"	2'-6"	3'-0"	3'-6"	4'-0"	-	1'-0"	1'-0"	1'-6"	2'-0"	2'-6"	3'-0"	3'-6"	-	-
		10'	1'-0"	1'-0"	1'-6"	2'-0"	2'-6"	3'-0"	3'-6"	4'-4"	-	1'-0"	1'-0"	1'-6"	2'-0"	3'-3"	4'-0"	5'-0"	-	-
		12'	1'-0"	1'-0"	1'-6"	2'-0"	3'-1"	4'-0"	4'-11"	5'-10"	-	1'-0"	1'-0"	1'-6"	2'-4"	4'-9"	5'-8"	-	-	-
		14'	1'-0"	1'-0"	1'-6"	2'-0"	4'-3"	5'-4"	6'-1"	-	-	1'-0"	1'-0"	1'-8"	3'-10"	6'-4"	-	-	-	-
		16'	1'-0"	1'-0"	1'-6"	2'-10"	5'-8"	6'-6"	7'-9"	-	-	1'-0"	1'-0"	2'-9"	5'-2"	8'-0"	-	-	-	-
		18'	1'-0"	1'-0"	1'-10"	4'-1"	6'-10"	7'-9"	-	-	-	1'-0"	2'-2"	4'-5"	6'-9"	-	-	-	-	-
	LPI 36A 56A	20'	1'-0"	1'-0"	3'-1"	5'-7"	8'-1"	9'-1"	-	-	-	1'-5"	3'-5"	6'-0"	8'-6"	-	-	-	-	-
		22'	1'-0"	1'-8"	3'-11"	6'-8"	9'-5"	10'-7"	-	-	-	2'-8"	4'-11"	7'-1"	9'-11"	-	-	-	-	-
		24'	1'-0"	3'-1"	5'-6"	7'-11"	10'-11"	-	-	-	-	4'-2"	6'-7"	9'-0"	11'-5"	-	-	-	-	-
		26'	2'-0"	4'-0"	6'-7"	9'-2"	12'-6"	-	-	-	-	5'-2"	7'-9"	10'-5"	13'-0"	-	-	-	-	-
		28'	2'-10"	5'-0"	7'-9"	10'-7"	-	-	-	-	-	6'-11"	9'-1"	11'-11"	-	-	-	-	-	-
		30'	3'-10"	6'-10"	9'-1"	12'-1"	-	-	-	-	-	8'-2"	10'-6"	13'-6"	-	-	-	-	-	-

Table 8. Rectangular Web Hole Chart for LPI Joists: 40 psf Live Load, 15 psf Dead Load, up to 24" OC (Cont'd)

Joist Depth (in.)	Joist Series	Clear Span	Rectangular Holes																	
			Distance from End Suport									Distance from Interior Support or Cantilever-End Support								
			Maximum Hole Dimension: Depth or Width									Maximum Hole Dimension: Depth or Width								
			2"	4"	6"	8"	10"	12"	14"	16"	18"	2"	4"	6"	8"	10"	12"	14"	16"	18"
16	LPI 30A	8'	1'-0"	1'-0"	1'-6"	2'-0"	2'-6"	3'-0"	3'-6"	4'-0"	-	1'-0"	1'-0"	1'-6"	2'-0"	2'-6"	3'-0"	3'-10"	-	-
		10'	1'-0"	1'-0"	1'-6"	2'-0"	2'-6"	3'-1"	3'-10"	4'-10"	-	1'-0"	1'-0"	1'-6"	2'-0"	2'-6"	4'-6"	-	-	-
		12'	1'-0"	1'-0"	1'-6"	2'-0"	2'-6"	4'-4"	5'-2"	-	-	1'-0"	1'-0"	1'-6"	2'-0"	3'-7"	-	-	-	-
		14'	1'-0"	1'-0"	1'-6"	2'-0"	3'-3"	5'-8"	6'-9"	-	-	1'-0"	1'-0"	1'-6"	3'-1"	5'-3"	-	-	-	-
		16'	1'-0"	1'-0"	1'-6"	2'-1"	4'-6"	6'-11"	-	-	-	1'-0"	1'-0"	2'-4"	4'-4"	6'-9"	-	-	-	-
		18'	1'-0"	1'-0"	1'-6"	3'-3"	5'-6"	8'-8"	-	-	-	1'-0"	1'-9"	3'-6"	5'-10"	8'-7"	-	-	-	-
		20'	1'-0"	1'-0"	2'-7"	4'-7"	7'-1"	-	-	-	-	1'-0"	2'-11"	4'-11"	7'-6"	10'-0"	-	-	-	-
		22'	1'-0"	1'-8"	3'-4"	5'-7"	8'-4"	-	-	-	-	2'-8"	4'-4"	6'-7"	8'-9"	-	-	-	-	-
		24'	1'-0"	2'-5"	4'-10"	7'-3"	9'-8"	-	-	-	-	3'-6"	5'-11"	8'-4"	10'-10"	-	-	-	-	-
		26'	2'-0"	4'-0"	5'-11"	8'-6"	11'-2"	-	-	-	-	5'-2"	7'-1"	9'-9"	12'-4"	-	-	-	-	-
		28'	2'-10"	5'-0"	7'-1"	9'-11"	12'-8"	-	-	-	-	6'-3"	9'-1"	11'-2"	14'-0"	-	-	-	-	-
		30'	3'-10"	6'-1"	8'-4"	10'-7"	13'-7"	-	-	-	-	8'-2"	10'-6"	12'-9"	-	-	-	-	-	-
	LPI 36A 56A	8'	1'-0"	1'-0"	1'-6"	2'-0"	2'-6"	3'-0"	3'-6"	4'-0"	-	1'-0"	1'-0"	1'-6"	2'-0"	2'-6"	3'-0"	3'-10"	-	-
		10'	1'-0"	1'-0"	1'-6"	2'-0"	2'-6"	3'-1"	3'-10"	4'-10"	-	1'-0"	1'-0"	1'-6"	2'-0"	2'-6"	4'-6"	-	-	-
		12'	1'-0"	1'-0"	1'-6"	2'-0"	2'-6"	4'-4"	5'-2"	-	-	1'-0"	1'-0"	1'-6"	2'-0"	3'-7"	-	-	-	-
		14'	1'-0"	1'-0"	1'-6"	2'-0"	3'-3"	5'-8"	6'-9"	-	-	1'-0"	1'-0"	1'-6"	3'-1"	5'-3"	-	-	-	-
		16'	1'-0"	1'-0"	1'-6"	2'-1"	4'-6"	6'-11"	-	-	-	1'-0"	1'-0"	2'-4"	4'-4"	6'-9"	-	-	-	-
		18'	1'-0"	1'-0"	1'-6"	3'-3"	5'-6"	8'-8"	-	-	-	1'-0"	1'-9"	3'-6"	5'-10"	8'-7"	-	-	-	-
		20'	1'-0"	1'-0"	2'-7"	4'-7"	7'-1"	-	-	-	-	1'-0"	2'-11"	4'-11"	7'-6"	10'-0"	-	-	-	-
		22'	1'-0"	1'-8"	3'-4"	5'-7"	8'-4"	-	-	-	-	2'-8"	4'-4"	6'-7"	8'-9"	-	-	-	-	-
		24'	1'-0"	2'-5"	4'-10"	7'-3"	9'-8"	-	-	-	-	3'-6"	5'-11"	8'-4"	10'-10"	-	-	-	-	-
		26'	2'-0"	4'-0"	5'-11"	8'-6"	11'-2"	-	-	-	-	5'-2"	7'-1"	9'-9"	12'-4"	-	-	-	-	-
		28'	2'-10"	5'-0"	7'-1"	9'-11"	12'-8"	-	-	-	-	6'-3"	9'-1"	11'-2"	14'-0"	-	-	-	-	-
		30'	3'-10"	6'-1"	8'-4"	10'-7"	13'-7"	-	-	-	-	8'-2"	10'-6"	12'-9"	-	-	-	-	-	-
18	LPI 36A 56A	12'	1'-0"	1'-0"	1'-6"	2'-0"	2'-6"	3'-0"	4'-7"	-	-	1'-0"	1'-0"	1'-6"	2'-0"	2'-6"	3'-0"	-	-	-
		14'	1'-0"	1'-0"	1'-6"	2'-0"	2'-6"	3'-0"	6'-1"	-	-	1'-0"	1'-0"	1'-6"	2'-0"	2'-6"	4'-2"	-	-	-
		16'	1'-0"	1'-0"	1'-6"	2'-0"	2'-6"	3'-8"	7'-4"	-	-	1'-0"	1'-0"	1'-6"	2'-0"	2'-9"	6'-0"	-	-	-
		18'	1'-0"	1'-0"	1'-6"	2'-0"	2'-6"	4'-7"	8'-8"	-	-	1'-0"	1'-0"	1'-6"	2'-0"	4'-0"	7'-2"	-	-	-
		20'	1'-0"	1'-0"	1'-6"	2'-0"	2'-7"	6'-1"	-	-	-	1'-0"	1'-0"	1'-6"	2'-5"	5'-6"	9'-0"	-	-	-
		22'	1'-0"	1'-0"	1'-6"	2'-0"	3'-11"	7'-3"	-	-	-	1'-0"	1'-0"	1'-6"	3'-9"	7'-2"	10'-6"	-	-	-
		24'	1'-0"	1'-0"	1'-6"	2'-0"	4'-11"	8'-6"	-	-	-	1'-0"	1'-0"	2'-4"	5'-4"	8'-5"	12'-0"	-	-	-
		26'	1'-0"	1'-0"	1'-6"	3'-4"	6'-7"	9'-10"	-	-	-	1'-0"	1'-0"	3'-10"	6'-5"	9'-9"	-	-	-	-
		28'	1'-0"	1'-0"	1'-6"	4'-3"	7'-10"	11'-4"	-	-	-	1'-0"	2'-0"	4'-10"	8'-4"	11'-11"	-	-	-	-
		30'	1'-0"	1'-0"	2'-4"	5'-4"	9'-1"	12'-11"	-	-	-	1'-0"	3'-8"	6'-8"	9'-9"	13'-6"	-	-	-	-
		32'	1'-0"	1'-0"	3'-3"	6'-6"	9'-8"	13'-9"	-	-	-	2'-4"	4'-9"	8'-0"	11'-2"	15'-3"	-	-	-	-
		34'	1'-0"	1'-9"	4'-4"	7'-9"	11'-2"	15'-5"	-	-	-	3'-4"	5'-11"	9'-4"	12'-9"	16'-2"	-	-	-	-
20	LPI 36A 56A	12'	1'-0"	1'-0"	1'-6"	2'-0"	2'-6"	3'-0"	3'-6"	4'-4"	5'-10"	1'-0"	1'-0"	1'-6"	2'-0"	2'-6"	3'-0"	4'-10"	6'-0"	-
		14'	1'-0"	1'-0"	1'-6"	2'-0"	2'-6"	3'-0"	4'-4"	5'-9"	-	1'-0"	1'-0"	1'-6"	2'-0"	2'-6"	3'-1"	6'-4"	-	-
		16'	1'-0"	1'-0"	1'-6"	2'-0"	2'-6"	3'-0"	5'-4"	6'-11"	-	1'-0"	1'-0"	1'-6"	2'-0"	2'-6"	4'-4"	8'-0"	-	-
		18'	1'-0"	1'-0"	1'-6"	2'-0"	2'-6"	3'-8"	6'-10"	8'-3"	-	1'-0"	1'-0"	1'-6"	2'-0"	3'-1"	5'-10"	-	-	-
		20'	1'-0"	1'-0"	1'-6"	2'-0"	2'-6"	4'-7"	8'-1"	9'-8"	-	1'-0"	1'-0"	1'-6"	2'-0"	4'-5"	7'-6"	-	-	-
		22'	1'-0"	1'-0"	1'-6"	2'-0"	2'-10"	6'-2"	9'-6"	-	-	1'-0"	1'-0"	1'-6"	3'-3"	6'-0"	9'-4"	-	-	-
		24'	1'-0"	1'-0"	1'-6"	2'-0"	4'-3"	7'-4"	10'-11"	-	-	1'-0"	1'-0"	1'-9"	4'-9"	7'-2"	10'-10"	-	-	-
		26'	1'-0"	1'-0"	1'-6"	2'-8"	5'-3"	8'-7"	12'-6"	-	-	1'-0"	1'-0"	3'-2"	5'-10"	9'-1"	12'-4"	-	-	-
		28'	1'-0"	1'-0"	1'-6"	3'-7"	6'-5"	9'-11"	13'-5"	-	-	1'-0"	2'-0"	4'-2"	7'-0"	10'-6"	14'-0"	-	-	-
		30'	1'-0"	1'-0"	1'-7"	4'-7"	7'-7"	11'-4"	-	-	-	1'-0"	2'-11"	5'-11"	9'-0"	12'-0"	-	-	-	-
		32'	1'-0"	1'-0"	3'-3"	5'-8"	8'-11"	12'-1"	-	-	-	1'-6"	4'-9"	7'-2"	10'-5"	13'-7"	-	-	-	-
		34'	1'-0"	1'-9"	4'-4"	6'-11"	10'-4"	13'-9"	-	-	-	3'-4"	5'-11"	8'-5"	11'-11"	15'-4"	-	-	-	-
22	LPI 36A 56A	16'	1'-0"	1'-0"	1'-6"	2'-0"	2'-6"	3'-0"	4'-1"	5'-4"	6'-11"	1'-0"	1'-0"	1'-6"	2'-0"	2'-6"	3'-7"	6'-5"	8'-0"	-
		18'	1'-0"	1'-0"	1'-6"	2'-0"	2'-6"	3'-0"	5'-6"	6'-10"	8'-3"	1'-0"	1'-0"	1'-6"	2'-0"	2'-6"	4'-11"	8'-1"	-	-
		20'	1'-0"	1'-0"	1'-6"	2'-0"	2'-6"	3'-7"	6'-7"	8'-1"	9'-8"	1'-0"	1'-0"	1'-6"	2'-0"	3'-5"	6'-6"	9'-6"	-	-
		22'	1'-0"	1'-0"	1'-6"	2'-0"	2'-6"	5'-0"	7'-10"	9'-6"	-	1'-0"	1'-0"	1'-6"	2'-8"	4'-11"	8'-3"	-	-	-
		24'	1'-0"	1'-0"	1'-6"	2'-0"	3'-1"	6'-1"	9'-1"	10'-11"	-	1'-0"	1'-0"	1'-6"	3'-6"	6'-7"	9'-7"	-	-	-
		26'	1'-0"	1'-0"	1'-6"	2'-0"	4'-8"	7'-3"	10'-6"	12'-6"	-	1'-0"	1'-0"	2'-6"	5'-2"	7'-9"	11'-1"	-	-	-
		28'	1'-0"	1'-0"	1'-6"	2'-10"	5'-8"	8'-6"	12'-0"	13'-5"	-	1'-0"	1'-4"	4'-2"	7'-0"	9'-9"	12'-7"	-	-	-
		30'	1'-0"	1'-0"	1'-7"	3'-10"	6'-10"	9'-10"	13'-8"	-	-	1'-0"	2'-11"	5'-2"	8'-3"	11'-3"	14'-3"	-	-	-
		32'	1'-0"	1'-0"	2'-5"	4'-10"	8'-1"	11'-4"	14'-6"	-	-	1'-6"	3'-11"	7'-2"	9'-7"	12'-10"	16'-0"	-	-	-
		34'	1'-0"	1'-0"	3'-6"	6'-0"	9'-5"	12'-10"	16'-3"	-	-	3'-4"	5'-11"	8'-5"	11'-0"	14'-5"	-	-	-	-
		36'	1'-0"	1'-10"	4'-7"	7'-3"	10'-11"	13'-7"	-	-	-	4'-5"	7'-2"	9'-10"	12'-7"	16'-3"	-	-	-	-
		38'	1'-0"	2'-11"	5'-9"	8'-8"	11'-6"	15'-4"	-	-	-	5'-8"	8'-6"	11'-4"	14'-3"	17'-1"	-	-	-	-
24	LPI 36A 56A	16'	1'-0"	1'-0"	1'-6"	2'-0"	2'-6"	3'-0"	3'-6"	4'-1"	5'-9"	1'-0"	1'-0"	1'-6"	2'-0"	2'-6"	3'-0"	5'-2"	6'-10"	8'-0"
		18'	1'-0"	1'-0"	1'-6"	2'-0"	2'-6"	3'-0"	4'-2"	5'-6"	6'-10"	1'-0"	1'-0"	1'-6"	2'-0"	2'-6"	4'-0"	6'-9"	8'-1"	-
		20'	1'-0"	1'-0"	1'-6"	2'-0"	2'-6"	3'-0"	5'-7"	6'-7"	8'-1"	1'-0"	1'-0"	1'-6"	2'-0"	2'-11"	5'-6"	8'-6"	10'-0"	-
		22'	1'-0"	1'-0"	1'-6"	2'-0"	2'-6"	3'-11"	6'-8"	8'-4"	9'-6"	1'-0"	1'-0"	1'-6"	2'-1"	4'-4"	7'-2"	9'-11"	-	-
		24'	1'-0"	1'-0"	1'-6"	2'-0"	2'-6"	4'-11"	7'-11"	9'-9"	10'-11"	1'-0"	1'-0"	1'-6"	3'-6"	6'-0"	8'-5"	12'-0"	-	-
		26'	1'-0"	1'-0"	1'-6"	2'-0"	4'-0"	6'-7"	9'-3"	11'-2"	12'-6"	1'-0"	1'-0"	2'-6"	4'-6"	7'-1"	10'-5"	-	-	-
		28'	1'-0"	1'-0"	1'-6"	2'-2"	5'-0"	7'-10"	10'-7"	12'-0"	-	1'-0"	1'-4"	3'-5"	6'-3"	9'-1"	11'-11"	-	-	-
		30'	1'-0"	1'-0"	1'-6"	3'-1"	6'-1"	9'-1"	12'-1"	13'-8"	-	1'-0"	2'-11"	5'-2"	7'-5"	10'-6"	13'-6"	-	-	-
		32'	1'-0"	1'-0"	2'-5"	4'-10"	7'-3"	10'-6"	13'-9"	15'-4"	-	1'-6"	3'-11"	6'-4"	8'-9"	12'-0"	15'-3"	-	-	-
		34'	1'-0"	1'-0"	3'-6"	6'-0"	8'-7"	11'-2"	14'-7"	16'-3"	-	2'-6"	5'-0"	7'-7"	10'-2"	13'-7"	16'-2"	-	-	-
		36'	1'-0"	1'-10"	4'-7"	7'-3"	10'-0"	12'-9"	16'-4"	-	-	4'-5"	6'-3"	8'-11"	11'-8"	15'-4"	18'-0"	-	-	-
		38'	1'-0"	2'-11"	5'-9"	7'-8"	10'-7"	14'-4"	17'-3"	-	-	5'-8"	8'-6"	10'-5"	13'-3"	16'-2"	-	-	-	-

Table 9. Circular Web Hole Chart for LPI Joists: 40 psf Live Load, 25 psf Dead Load, up to 24” OC

Joist Depth (in.)	Joist Series	Clear Span	Circular Holes (including Obround Holes)															
			Distance from End Suport								Distance from Interior Support or Cantilever-End Support							
			Hole Diameter							Obround	Hole Diameter							Obround
			2"	4"	6"	8"	10"	12"	14"	Hole	2"	4"	6"	8"	10"	12"	14"	Hole
9 1/2	LPI 100 125 150	6'	1'-0"	1'-0"	1'-6"	-	-	-	-	-	1'-0"	1'-0"	1'-6"	-	-	-	-	-
		8'	1'-0"	1'-0"	1'-6"	-	-	-	-	-	1'-0"	1'-0"	1'-11"	-	-	-	-	-
		10'	1'-0"	1'-0"	2'-1"	-	-	-	-	-	1'-0"	1'-5"	3'-6"	-	-	-	-	-
		12'	1'-0"	1'-3"	3'-5"	-	-	-	-	-	1'-1"	2'-11"	5'-1"	-	-	-	-	-
		14'	1'-0"	2'-6"	4'-8"	-	-	-	-	-	2'-5"	4'-6"	6'-8"	-	-	-	-	-
		16'	1'-8"	3'-8"	6'-1"	-	-	-	-	-	3'-11"	6'-0"	-	-	-	-	-	-
		18'	2'-9"	5'-0"	7'-4"	-	-	-	-	-	5'-4"	7'-8"	-	-	-	-	-	-
	LPI 200 225 250	6'	1'-0"	1'-0"	1'-6"	-	-	-	-	1'-0"	1'-0"	1'-0"	1'-6"	-	-	-	-	1'-2"
		8'	1'-0"	1'-0"	1'-6"	-	-	-	-	1'-6"	1'-0"	1'-0"	1'-6"	-	-	-	-	2'-7"
		10'	1'-0"	1'-0"	1'-6"	-	-	-	-	2'-10"	1'-0"	1'-0"	1'-8"	-	-	-	-	4'-3"
		12'	1'-0"	1'-0"	1'-6"	-	-	-	-	4'-0"	1'-0"	1'-5"	2'-11"	-	-	-	-	5'-8"
		14'	1'-0"	1'-1"	2'-6"	-	-	-	-	5'-4"	1'-4"	2'-9"	4'-6"	-	-	-	-	-
		16'	1'-0"	2'-1"	3'-8"	-	-	-	-	6'-6"	2'-9"	4'-4"	6'-0"	-	-	-	-	-
		18'	1'-5"	3'-3"	5'-0"	-	-	-	-	8'-2"	4'-0"	5'-10"	7'-8"	-	-	-	-	-
	LPI 300 325	6'	1'-0"	1'-0"	1'-6"	-	-	-	-	1'-0"	1'-0"	1'-0"	1'-6"	-	-	-	-	1'-0"
		8'	1'-0"	1'-0"	1'-6"	-	-	-	-	1'-0"	1'-0"	1'-0"	1'-6"	-	-	-	-	1'-11"
		10'	1'-0"	1'-0"	1'-6"	-	-	-	-	2'-1"	1'-0"	1'-0"	1'-8"	-	-	-	-	3'-6"
		12'	1'-0"	1'-0"	1'-7"	-	-	-	-	3'-5"	1'-0"	1'-0"	3'-3"	-	-	-	-	5'-1"
		14'	1'-0"	1'-0"	2'-10"	-	-	-	-	4'-8"	1'-0"	2'-0"	4'-10"	-	-	-	-	6'-8"
		16'	1'-0"	1'-3"	4'-1"	-	-	-	-	6'-1"	1'-1"	3'-7"	6'-5"	-	-	-	-	-
		18'	1'-0"	2'-4"	5'-0"	-	-	-	-	7'-4"	2'-8"	4'-11"	7'-8"	-	-	-	-	-
		20'	1'-1"	3'-7"	6'-7"	-	-	-	-	8'-7"	3'-11"	6'-6"	9'-6"	-	-	-	-	-
11 7/8	LPI 100 125 150	6'	1'-0"	1'-0"	1'-6"	2'-0"	-	-	-	-	1'-0"	1'-0"	1'-6"	2'-0"	-	-	-	-
		8'	1'-0"	1'-0"	1'-6"	2'-0"	-	-	-	-	1'-0"	1'-0"	1'-6"	2'-4"	-	-	-	-
		10'	1'-0"	1'-0"	1'-6"	2'-7"	-	-	-	-	1'-0"	1'-0"	2'-2"	4'-0"	-	-	-	-
		12'	1'-0"	1'-0"	2'-2"	3'-8"	-	-	-	-	1'-0"	2'-0"	3'-10"	5'-8"	-	-	-	-
		14'	1'-0"	1'-10"	3'-3"	5'-0"	-	-	-	-	2'-0"	3'-5"	5'-3"	-	-	-	-	-
		16'	1'-3"	2'-10"	4'-6"	6'-6"	-	-	-	-	3'-7"	5'-2"	6'-9"	-	-	-	-	-
		18'	2'-4"	4'-1"	5'-11"	7'-9"	-	-	-	-	4'-11"	6'-9"	8'-7"	-	-	-	-	-
		20'	3'-7"	5'-1"	7'-1"	9'-1"	-	-	-	-	6'-6"	8'-0"	10'-0"	-	-	-	-	-
		22'	4'-6"	6'-8"	8'-4"	10'-7"	-	-	-	-	7'-8"	9'-11"	-	-	-	-	-	-
	LPI 200 225 250	6'	1'-0"	1'-0"	1'-6"	2'-0"	-	-	-	1'-0"	1'-0"	1'-0"	1'-6"	2'-0"	-	-	-	1'-2"
		8'	1'-0"	1'-0"	1'-6"	2'-0"	-	-	-	1'-6"	1'-0"	1'-0"	1'-6"	2'-0"	-	-	-	2'-7"
		10'	1'-0"	1'-0"	1'-6"	2'-0"	-	-	-	2'-10"	1'-0"	1'-0"	1'-6"	2'-0"	-	-	-	4'-3"
		12'	1'-0"	1'-0"	1'-6"	2'-0"	-	-	-	4'-0"	1'-0"	1'-0"	2'-0"	3'-3"	-	-	-	5'-8"
		14'	1'-0"	1'-0"	1'-6"	2'-10"	-	-	-	5'-4"	1'-0"	2'-0"	3'-5"	4'-10"	-	-	-	-
		16'	1'-0"	1'-3"	2'-10"	4'-1"	-	-	-	6'-6"	2'-4"	3'-7"	4'-9"	6'-5"	-	-	-	-
		18'	1'-5"	2'-4"	3'-8"	5'-6"	-	-	-	8'-2"	3'-6"	4'-11"	6'-3"	8'-1"	-	-	-	-
		20'	2'-7"	3'-7"	5'-1"	6'-7"	-	-	-	9'-7"	4'-11"	6'-6"	8'-0"	9'-6"	-	-	-	-
		22'	3'-4"	5'-0"	6'-2"	7'-10"	-	-	-	-	6'-7"	8'-3"	9'-4"	-	-	-	-	-

DESIGN ASSUMPTIONS FOR TABLES 9 TO 10:

1. The hole locations listed above are valid for joists supporting only uniform loads. The total uniform load must not exceed 130 plf (e.g. 40 psf Live Load and a 25 psf Dead Load, spaced up to 24” oc). The uniform Dead Load must be at least 10 plf.
2. Hole location is measured from the inside face of bearing to the center of a circular or Obround hole, or to the nearest edge of a rectangular hole, from the closest support.
3. Obround holes are (up to) full web-depth holes with semi-circular ends defined by three overlapping circular holes spaced up to 1-1/2” apart, center-to-center of holes.
4. The maximum hole depth for circular and rectangular holes is Joist Depth less 4”, except the maximum hole depth is 6” for 9-1/2” and 8” for 11-7/8” LPI joists. The maximum hole width for rectangular holes is 18”. Where the Maximum Hole Dimension for rectangular holes exceeds the maximum hole depth, the dimension refers to the hole width and the hole depth is assumed to be the maximum for that joist depth.
5. Holes cannot be located in the span where designated "-", without further analysis by a professional engineer (see Note 8 below).
6. Clear Span has NOT been verified for these joists and is shown for informational purposes only! Verify that the joist selected will work for the span and loading conditions needed before checking hole location.

GENERAL NOTES FOR TABLES 9 TO 10:

1. **CUT HOLES CAREFULLY! DO NOT OVERCUT HOLES! DO NOT CUT JOIST FLANGES!**
2. Circular and rectangular holes may be placed anywhere within the depth of the web. A minimum ¼” clear distance is required between the hole and a flange. Obround holes may be up to full web-depth.
3. Round holes up to 1-1/2” diameter may be placed anywhere in the web.
4. Perforated “knockouts” may be neglected when locating web holes.
5. Holes larger than 1-1/2” are not permitted in cantilevers without special engineering.
6. Multiple holes must have a clear separation along the length of the joist of at least twice the length of the larger adjacent hole, or a minimum of 12” center-to-center, whichever is greater. **Exception**: adjacent Obround holes may be spaced as close as 24” clear distance between holes.
7. Multiple holes may be spaced closer provided they fit within the boundary of an acceptable larger hole. Example: two 3” round holes aligned parallel to the joist length may be spaced 2” apart (clear distance) provided that a 3” high by 8” long rectangle or an 8” diameter round hole are acceptable for the joist depth at that location and completely encompass the holes.
8. Larger holes, greater uniform loads or non-uniform loads, and closer proximity to supports and other holes may be possible with further analysis (See Section “Design” #4 or web hole shear equations listed in Table 6).
9. Not all series are available in all depths. Check availability with a local LP Engineered Wood Products distributor.
10. For SI Units Conversion: 1 in. = 25.4 mm; 1 ft. = 304.8 mm.

Table 9. Circular Web Hole Chart for LPI Joists: 40 psf Live Load, 25 psf Dead Load, up to 24” OC (Cont’d)

Joist Depth (in.)	Joist Series	Clear Span	Circular Holes (including Obround Holes)															
			Distance from End Suport								Distance from Interior Support or Cantilever-End Support							
			Hole Diameter							Obround	Hole Diameter							Obround
			2"	4"	6"	8"	10"	12"	14"	Hole	2"	4"	6"	8"	10"	12"	14"	Hole
11 7/8	LPI 300 325 350	6'	1'-0"	1'-0"	1'-6"	2'-0"	-	-	-	1'-0"	1'-0"	1'-0"	1'-6"	2'-0"	-	-	-	1'-0"
		8'	1'-0"	1'-0"	1'-6"	2'-0"	-	-	-	1'-0"	1'-0"	1'-0"	1'-6"	2'-0"	-	-	-	1'-11"
		10'	1'-0"	1'-0"	1'-6"	2'-0"	-	-	-	2'-1"	1'-0"	1'-0"	1'-6"	2'-2"	-	-	-	3'-6"
		12'	1'-0"	1'-0"	1'-6"	2'-2"	-	-	-	3'-5"	1'-0"	1'-0"	1'-9"	3'-10"	-	-	-	5'-1"
		14'	1'-0"	1'-0"	1'-6"	3'-3"	-	-	-	4'-8"	1'-0"	1'-4"	3'-1"	5'-3"	-	-	-	6'-8"
		16'	1'-0"	1'-0"	2'-6"	4'-6"	-	-	-	6'-1"	1'-0"	2'-4"	4'-4"	6'-9"	-	-	-	-
		18'	1'-0"	1'-5"	3'-8"	5'-11"	-	-	-	7'-4"	1'-9"	4'-0"	5'-10"	8'-7"	-	-	-	-
		20'	1'-0"	2'-7"	4'-7"	7'-1"	-	-	-	8'-7"	3'-5"	5'-5"	7'-6"	10'-0"	-	-	-	-
		22'	1'-8"	3'-11"	6'-2"	8'-4"	-	-	-	10'-0"	4'-11"	6'-7"	9'-4"	-	-	-	-	-
		24'	3'-1"	4'-10"	7'-3"	9'-8"	-	-	-	11'-6"	5'-11"	8'-4"	10'-10"	-	-	-	-	-
	LPI 550	6'	1'-0"	1'-0"	1'-6"	2'-0"	-	-	-	1'-0"	1'-0"	1'-0"	1'-6"	2'-0"	-	-	-	1'-0"
		8'	1'-0"	1'-0"	1'-6"	2'-0"	-	-	-	1'-0"	1'-0"	1'-0"	1'-6"	2'-0"	-	-	-	1'-11"
		10'	1'-0"	1'-0"	1'-6"	2'-0"	-	-	-	2'-1"	1'-0"	1'-0"	1'-6"	2'-2"	-	-	-	3'-6"
		12'	1'-0"	1'-0"	1'-6"	2'-2"	-	-	-	3'-5"	1'-0"	1'-0"	1'-9"	3'-10"	-	-	-	5'-1"
		14'	1'-0"	1'-0"	1'-6"	3'-3"	-	-	-	4'-8"	1'-0"	1'-4"	3'-1"	5'-3"	-	-	-	6'-8"
		16'	1'-0"	1'-0"	2'-6"	4'-6"	-	-	-	6'-1"	1'-0"	2'-4"	4'-4"	6'-9"	-	-	-	-
		18'	1'-0"	1'-5"	3'-8"	5'-11"	-	-	-	7'-4"	1'-9"	4'-0"	5'-10"	8'-7"	-	-	-	-
		20'	1'-0"	2'-7"	4'-7"	7'-1"	-	-	-	8'-7"	3'-5"	5'-5"	7'-6"	10'-0"	-	-	-	-
		22'	1'-8"	3'-11"	6'-2"	8'-4"	-	-	-	10'-0"	4'-11"	6'-7"	9'-4"	-	-	-	-	-
		24'	3'-1"	4'-10"	7'-3"	9'-8"	-	-	-	11'-6"	5'-11"	8'-4"	10'-10"	-	-	-	-	-
		26'	4'-0"	5'-11"	8'-6"	11'-2"	-	-	-	-	7'-9"	9'-9"	12'-4"	-	-	-	-	-
		28'	5'-0"	7'-1"	9'-11"	12'-8"	-	-	-	-	9'-1"	11'-2"	14'-0"	-	-	-	-	-
14	LPI 200 225 250	8'	1'-0"	1'-0"	1'-6"	2'-0"	2'-6"	-	-	1'-6"	1'-0"	1'-0"	1'-6"	2'-0"	2'-6"	-	-	2'-7"
		10'	1'-0"	1'-0"	1'-6"	2'-0"	2'-6"	-	-	2'-10"	1'-0"	1'-0"	1'-6"	2'-0"	2'-6"	-	-	4'-3"
		12'	1'-0"	1'-0"	1'-6"	2'-0"	2'-6"	-	-	4'-0"	1'-0"	1'-0"	1'-6"	2'-8"	3'-7"	-	-	5'-8"
		14'	1'-0"	1'-0"	1'-6"	2'-2"	3'-3"	-	-	5'-4"	1'-0"	1'-8"	2'-9"	4'-2"	5'-3"	-	-	-
		16'	1'-0"	1'-0"	2'-1"	3'-3"	4'-6"	-	-	6'-6"	1'-11"	3'-2"	4'-4"	5'-7"	6'-9"	-	-	-
		18'	1'-0"	2'-4"	3'-3"	4'-7"	5'-11"	-	-	8'-2"	3'-6"	4'-5"	5'-10"	7'-2"	8'-7"	-	-	-
		20'	2'-1"	3'-1"	4'-7"	5'-7"	7'-1"	-	-	9'-7"	4'-11"	6'-0"	7'-6"	8'-6"	10'-0"	-	-	-
		22'	3'-4"	4'-6"	5'-7"	7'-3"	8'-4"	-	-	-	6'-7"	7'-8"	8'-9"	10'-5"	-	-	-	-
		24'	4'-3"	5'-6"	6'-8"	8'-6"	9'-8"	-	-	-	7'-9"	9'-0"	10'-2"	12'-0"	-	-	-	-
		26'	5'-11"	7'-3"	8'-6"	9'-10"	11'-2"	-	-	-	9'-1"	10'-5"	12'-4"	-	-	-	-	-
	LPI 300 325 350 550	8'	1'-0"	1'-0"	1'-6"	2'-0"	2'-6"	-	-	1'-0"	1'-0"	1'-0"	1'-6"	2'-0"	2'-6"	-	-	1'-11"
		10'	1'-0"	1'-0"	1'-6"	2'-0"	2'-6"	-	-	2'-1"	1'-0"	1'-0"	1'-6"	2'-0"	2'-8"	-	-	3'-6"
		12'	1'-0"	1'-0"	1'-6"	2'-0"	2'-6"	-	-	3'-5"	1'-0"	1'-0"	1'-6"	2'-4"	4'-2"	-	-	5'-1"
		14'	1'-0"	1'-0"	1'-6"	2'-0"	3'-11"	-	-	4'-8"	1'-0"	1'-0"	2'-0"	3'-10"	5'-11"	-	-	6'-8"
		16'	1'-0"	1'-0"	1'-6"	3'-3"	5'-3"	-	-	6'-1"	1'-0"	1'-11"	3'-7"	5'-7"	7'-7"	-	-	-
		18'	1'-0"	1'-0"	2'-9"	4'-7"	6'-5"	-	-	7'-4"	1'-9"	3'-1"	4'-11"	6'-9"	9'-0"	-	-	-
		20'	1'-0"	2'-1"	3'-7"	5'-7"	7'-7"	-	-	8'-7"	2'-11"	4'-5"	6'-6"	8'-6"	-	-	-	-
		22'	1'-8"	3'-4"	5'-0"	6'-8"	8'-11"	-	-	10'-0"	4'-4"	6'-0"	8'-3"	9'-11"	-	-	-	-
		24'	2'-5"	4'-3"	6'-1"	8'-6"	10'-4"	-	-	11'-6"	5'-11"	7'-9"	9'-7"	12'-0"	-	-	-	-
		26'	4'-0"	5'-3"	7'-3"	9'-10"	11'-10"	-	-	-	7'-1"	9'-1"	11'-0"	-	-	-	-	-
		28'	5'-0"	6'-4"	8'-6"	10'-7"	13'-5"	-	-	-	9'-1"	10'-6"	12'-7"	-	-	-	-	-
		30'	6'-1"	7'-7"	9'-10"	12'-1"	-	-	-	-	10'-6"	12'-0"	14'-3"	-	-	-	-	-
16	LPI 200 225 250	8'	1'-0"	1'-0"	1'-6"	2'-0"	2'-6"	3'-0"	-	1'-6"	1'-0"	1'-0"	1'-6"	2'-0"	2'-6"	3'-0"	-	2'-7"
		10'	1'-0"	1'-0"	1'-6"	2'-0"	2'-6"	3'-0"	-	2'-10"	1'-0"	1'-0"	1'-6"	2'-0"	2'-6"	3'-0"	-	4'-3"
		12'	1'-0"	1'-0"	1'-6"	2'-0"	2'-6"	3'-0"	-	4'-0"	1'-0"	1'-0"	1'-6"	2'-0"	2'-11"	3'-10"	-	5'-8"
		14'	1'-0"	1'-0"	1'-6"	2'-0"	2'-6"	3'-7"	-	5'-4"	1'-0"	1'-8"	2'-5"	3'-5"	4'-6"	5'-7"	-	-
		16'	1'-0"	1'-0"	1'-8"	2'-6"	3'-8"	4'-11"	-	6'-6"	1'-11"	2'-9"	3'-11"	4'-9"	6'-0"	7'-2"	-	-
		18'	1'-0"	1'-10"	2'-9"	3'-8"	5'-0"	5'-11"	-	8'-2"	3'-6"	4'-5"	5'-4"	6'-3"	7'-8"	9'-0"	-	-
		20'	2'-1"	3'-1"	4'-1"	5'-1"	6'-1"	7'-7"	-	9'-7"	4'-11"	6'-0"	7'-0"	8'-0"	9'-0"	-	-	-
		22'	3'-4"	3'-11"	5'-0"	6'-2"	7'-3"	8'-11"	-	-	6'-0"	7'-1"	8'-3"	9'-4"	11'-0"	-	-	-
		24'	4'-3"	5'-6"	6'-8"	7'-11"	9'-1"	10'-4"	-	-	7'-9"	9'-0"	10'-2"	11'-5"	-	-	-	-
		26'	5'-3"	6'-7"	7'-11"	9'-2"	10'-6"	11'-10"	-	-	9'-1"	10'-5"	11'-8"	13'-0"	-	-	-	-
		28'	7'-1"	7'-9"	9'-2"	9'-11"	11'-4"	12'-8"	-	-	10'-6"	11'-11"	13'-4"	-	-	-	-	-
		30'	8'-4"	9'-1"	10'-7"	11'-4"	12'-10"	14'-4"	-	-	12'-0"	13'-6"	15'-0"	-	-	-	-	-
	LPI 300 325 350 550	8'	1'-0"	1'-0"	1'-6"	2'-0"	2'-6"	3'-0"	-	1'-0"	1'-0"	1'-0"	1'-6"	2'-0"	2'-6"	3'-0"	-	1'-11"
		10'	1'-0"	1'-0"	1'-6"	2'-0"	2'-6"	3'-0"	-	2'-1"	1'-0"	1'-0"	1'-6"	2'-0"	2'-6"	3'-3"	-	3'-6"
		12'	1'-0"	1'-0"	1'-6"	2'-0"	2'-6"	3'-1"	-	3'-5"	1'-0"	1'-0"	1'-6"	2'-0"	3'-3"	4'-9"	-	5'-1"
		14'	1'-0"	1'-0"	1'-6"	2'-0"	2'-6"	4'-3"	-	4'-8"	1'-0"	1'-0"	1'-8"	3'-1"	4'-6"	6'-4"	-	6'-8"
		16'	1'-0"	1'-0"	1'-6"	2'-1"	3'-8"	5'-8"	-	6'-1"	1'-0"	1'-6"	2'-9"	4'-4"	6'-0"	8'-0"	-	-
		18'	1'-0"	1'-0"	1'-10"	3'-3"	5'-0"	6'-10"	-	7'-4"	1'-3"	3'-1"	4'-5"	5'-10"	7'-8"	-	-	-
		20'	1'-0"	1'-7"	3'-1"	4'-7"	6'-7"	8'-1"	-	8'-7"	2'-11"	4'-5"	6'-0"	7'-6"	9'-6"	-	-	-
		22'	1'-2"	2'-10"	4'-6"	6'-2"	7'-10"	10'-0"	-	10'-0"	4'-4"	5'-5"	7'-1"	9'-4"	11'-0"	-	-	-
		24'	2'-5"	3'-8"	5'-6"	7'-3"	9'-1"	10'-11"	-	11'-6"	5'-4"	7'-2"	9'-0"	10'-10"	-	-	-	-
		26'	3'-4"	5'-3"	6'-7"	8'-6"	10'-6"	12'-6"	-	-	7'-1"	8'-5"	10'-5"	12'-4"	-	-	-	-
		28'	4'-3"	6'-4"	7'-9"	9'-11"	12'-0"	-	-	-	8'-4"	10'-6"	11'-11"	14'-0"	-	-	-	-
		30'	6'-1"	7'-7"	9'-1"	11'-4"	12'-10"	-	-	-	9'-9"	12'-0"	13'-6"	-	-	-	-	-

Table 9. Circular Web Hole Chart for LPI Joists: 40 psf Live Load, 25 psf Dead Load, up to 24" OC (Cont'd)

Joist Depth (in.)	Joist Series	Clear Span	Circular Holes (including Obround Holes)															
			Distance from End Suport								Distance from Interior Support or Cantilever-End Support							
			Hole Diameter							Obround	Hole Diameter							Obround
			2"	4"	6"	8"	10"	12"	14"	Hole	2"	4"	6"	8"	10"	12"	14"	Hole
9 1/2	LPI 26A	6'	1'-0"	1'-0"	1'-6"	-	-	-	-	-	1'-0"	1'-0"	1'-6"	-	-	-	-	-
		8'	1'-0"	1'-0"	1'-6"	-	-	-	-	-	1'-0"	1'-0"	1'-6"	-	-	-	-	-
		10'	1'-0"	1'-0"	1'-6"	-	-	-	-	-	1'-0"	1'-0"	2'-8"	-	-	-	-	-
		12'	1'-0"	1'-0"	2'-6"	-	-	-	-	-	1'-0"	2'-0"	4'-2"	-	-	-	-	-
		14'	1'-0"	1'-5"	3'-11"	-	-	-	-	-	1'-0"	3'-5"	5'-11"	-	-	-	-	-
		16'	1'-0"	2'-6"	5'-3"	-	-	-	-	-	2'-4"	4'-9"	7'-7"	-	-	-	-	-
		18'	1'-5"	3'-8"	6'-5"	-	-	-	-	-	4'-0"	6'-3"	9'-0"	-	-	-	-	-
	LPI 30A	6'	1'-0"	1'-0"	1'-6"	-	-	-	-	1'-0"	1'-0"	1'-0"	1'-6"	-	-	-	-	1'-2"
		8'	1'-0"	1'-0"	1'-6"	-	-	-	-	1'-6"	1'-0"	1'-0"	1'-6"	-	-	-	-	2'-7"
		10'	1'-0"	1'-0"	1'-6"	-	-	-	-	2'-10"	1'-0"	1'-0"	1'-6"	-	-	-	-	4'-3"
		12'	1'-0"	1'-0"	1'-6"	-	-	-	-	4'-0"	1'-0"	1'-0"	2'-0"	-	-	-	-	5'-8"
		14'	1'-0"	1'-0"	1'-6"	-	-	-	-	5'-4"	1'-0"	1'-8"	3'-5"	-	-	-	-	-
		16'	1'-0"	1'-0"	2'-10"	-	-	-	-	6'-6"	1'-1"	3'-2"	4'-9"	-	-	-	-	-
		18'	1'-0"	1'-10"	3'-8"	-	-	-	-	8'-2"	2'-8"	4'-5"	6'-3"	-	-	-	-	-
11 7/8	LPI 26A	6'	1'-0"	1'-0"	1'-6"	2'-0"	-	-	-	-	1'-0"	1'-0"	1'-6"	2'-0"	-	-	-	-
		8'	1'-0"	1'-0"	1'-6"	2'-0"	-	-	-	-	1'-0"	1'-0"	1'-6"	2'-0"	-	-	-	-
		10'	1'-0"	1'-0"	1'-6"	2'-0"	-	-	-	-	1'-0"	1'-0"	1'-6"	3'-3"	-	-	-	-
		12'	1'-0"	1'-0"	1'-6"	3'-1"	-	-	-	-	1'-0"	1'-1"	2'-11"	4'-9"	-	-	-	-
		14'	1'-0"	1'-0"	2'-2"	4'-3"	-	-	-	-	1'-0"	2'-5"	4'-2"	6'-4"	-	-	-	-
		16'	1'-0"	1'-8"	3'-8"	5'-8"	-	-	-	-	1'-11"	3'-11"	6'-0"	8'-0"	-	-	-	-
		18'	1'-0"	2'-9"	4'-7"	6'-10"	-	-	-	-	3'-6"	5'-4"	7'-2"	-	-	-	-	-
		20'	2'-1"	4'-1"	6'-1"	8'-7"	-	-	-	-	4'-11"	7'-0"	9'-0"	-	-	-	-	-
		22'	3'-4"	5'-0"	7'-3"	10'-0"	-	-	-	-	6'-7"	8'-3"	10'-5"	-	-	-	-	-
	LPI 30A	6'	1'-0"	1'-0"	1'-6"	2'-0"	-	-	-	1'-0"	1'-0"	1'-0"	1'-6"	2'-0"	-	-	-	1'-2"
		8'	1'-0"	1'-0"	1'-6"	2'-0"	-	-	-	1'-6"	1'-0"	1'-0"	1'-6"	2'-0"	-	-	-	2'-7"
		10'	1'-0"	1'-0"	1'-6"	2'-0"	-	-	-	2'-10"	1'-0"	1'-0"	1'-6"	2'-0"	-	-	-	4'-3"
		12'	1'-0"	1'-0"	1'-6"	2'-0"	-	-	-	4'-0"	1'-0"	1'-0"	1'-6"	2'-4"	-	-	-	5'-8"
		14'	1'-0"	1'-0"	1'-6"	2'-0"	-	-	-	5'-4"	1'-0"	1'-0"	2'-5"	3'-10"	-	-	-	-
		16'	1'-0"	1'-0"	1'-8"	3'-3"	-	-	-	6'-6"	1'-0"	2'-4"	3'-7"	5'-2"	-	-	-	-
		18'	1'-0"	1'-5"	2'-9"	4'-1"	-	-	-	8'-2"	2'-2"	3'-6"	5'-4"	6'-9"	-	-	-	-
		20'	1'-1"	2'-1"	4'-1"	5'-7"	-	-	-	9'-7"	3'-5"	4'-11"	6'-6"	8'-6"	-	-	-	-
		22'	1'-8"	3'-4"	5'-0"	6'-8"	-	-	-	-	4'-11"	6'-7"	8'-3"	9'-11"	-	-	-	-
	LPI 36A	6'	1'-0"	1'-0"	1'-6"	2'-0"	-	-	-	1'-0"	1'-0"	1'-0"	1'-6"	2'-0"	-	-	-	1'-0"
		8'	1'-0"	1'-0"	1'-6"	2'-0"	-	-	-	1'-0"	1'-0"	1'-0"	1'-6"	2'-0"	-	-	-	1'-11"
		10'	1'-0"	1'-0"	1'-6"	2'-0"	-	-	-	2'-1"	1'-0"	1'-0"	1'-6"	2'-0"	-	-	-	3'-6"
		12'	1'-0"	1'-0"	1'-6"	2'-0"	-	-	-	3'-5"	1'-0"	1'-0"	1'-6"	2'-11"	-	-	-	5'-1"
		14'	1'-0"	1'-0"	1'-6"	2'-6"	-	-	-	4'-8"	1'-0"	1'-0"	2'-0"	4'-2"	-	-	-	6'-8"
		16'	1'-0"	1'-0"	1'-6"	3'-8"	-	-	-	6'-1"	1'-0"	1'-1"	3'-2"	6'-0"	-	-	-	-
		18'	1'-0"	1'-0"	2'-4"	4'-7"	-	-	-	7'-4"	1'-0"	2'-2"	4'-11"	7'-2"	-	-	-	-
		20'	1'-0"	1'-1"	3'-7"	6'-1"	-	-	-	8'-7"	1'-5"	3'-11"	6'-0"	9'-0"	-	-	-	-
		22'	1'-0"	2'-3"	4'-6"	7'-3"	-	-	-	10'-0"	2'-8"	4'-11"	7'-8"	10'-5"	-	-	-	-
		24'	1'-3"	3'-1"	6'-1"	8'-6"	-	-	-	11'-6"	4'-2"	6'-7"	9'-0"	-	-	-	-	-
	LPI 56A	6'	1'-0"	1'-0"	1'-6"	2'-0"	-	-	-	1'-0"	1'-0"	1'-0"	1'-6"	2'-0"	-	-	-	1'-0"
		8'	1'-0"	1'-0"	1'-6"	2'-0"	-	-	-	1'-0"	1'-0"	1'-0"	1'-6"	2'-0"	-	-	-	1'-11"
		10'	1'-0"	1'-0"	1'-6"	2'-0"	-	-	-	2'-1"	1'-0"	1'-0"	1'-6"	2'-0"	-	-	-	3'-6"
		12'	1'-0"	1'-0"	1'-6"	2'-0"	-	-	-	3'-5"	1'-0"	1'-0"	1'-6"	2'-11"	-	-	-	5'-1"
		14'	1'-0"	1'-0"	1'-6"	2'-6"	-	-	-	4'-8"	1'-0"	1'-0"	2'-0"	4'-2"	-	-	-	6'-8"
		16'	1'-0"	1'-0"	1'-6"	3'-8"	-	-	-	6'-1"	1'-0"	1'-1"	3'-2"	6'-0"	-	-	-	-
		18'	1'-0"	1'-0"	2'-4"	4'-7"	-	-	-	7'-4"	1'-0"	2'-2"	4'-11"	7'-2"	-	-	-	-
		20'	1'-0"	1'-1"	3'-7"	6'-1"	-	-	-	8'-7"	1'-5"	3'-11"	6'-0"	9'-0"	-	-	-	-
		22'	1'-0"	2'-3"	4'-6"	7'-3"	-	-	-	10'-0"	2'-8"	4'-11"	7'-8"	10'-5"	-	-	-	-
		24'	1'-3"	3'-1"	6'-1"	8'-6"	-	-	-	11'-6"	4'-2"	6'-7"	9'-0"	-	-	-	-	-
		26'	2'-0"	4'-7"	7'-3"	9'-10"	-	-	-	-	5'-10"	7'-9"	11'-0"	-	-	-	-	-
		28'	2'-10"	5'-8"	8'-6"	11'-4"	-	-	-	-	6'-11"	9'-9"	12'-7"	-	-	-	-	-
14	LPI 30A	8'	1'-0"	1'-0"	1'-6"	2'-0"	2'-6"	-	-	1'-6"	1'-0"	1'-0"	1'-6"	2'-0"	2'-6"	-	-	2'-7"
		10'	1'-0"	1'-0"	1'-6"	2'-0"	2'-6"	-	-	2'-10"	1'-0"	1'-0"	1'-6"	2'-0"	2'-6"	-	-	4'-3"
		12'	1'-0"	1'-0"	1'-6"	2'-0"	2'-6"	-	-	4'-0"	1'-0"	1'-0"	1'-6"	2'-0"	2'-8"	-	-	5'-8"
		14'	1'-0"	1'-0"	1'-6"	2'-0"	2'-6"	-	-	5'-4"	1'-0"	1'-0"	1'-8"	2'-9"	4'-2"	-	-	-
		16'	1'-0"	1'-0"	1'-6"	2'-1"	3'-8"	-	-	6'-6"	1'-0"	1'-11"	3'-2"	4'-4"	6'-0"	-	-	-
		18'	1'-0"	1'-0"	1'-10"	3'-3"	4'-7"	-	-	8'-2"	1'-9"	3'-1"	4'-5"	5'-10"	7'-2"	-	-	-
		20'	1'-0"	2'-1"	3'-1"	4'-7"	6'-1"	-	-	9'-7"	3'-5"	4'-5"	6'-0"	7'-6"	9'-0"	-	-	-
		22'	1'-8"	2'-10"	4'-6"	5'-7"	7'-3"	-	-	-	4'-11"	6'-0"	7'-8"	8'-9"	10'-5"	-	-	-
		24'	3'-1"	4'-3"	5'-6"	7'-3"	8'-6"	-	-	-	5'-11"	7'-9"	9'-0"	10'-10"	12'-0"	-	-	-
		26'	4'-0"	5'-3"	6'-7"	8'-6"	9'-10"	-	-	-	7'-9"	9'-1"	10'-5"	12'-4"	-	-	-	-
		28'	5'-0"	6'-4"	7'-9"	9'-11"	11'-4"	-	-	-	9'-1"	10'-6"	11'-11"	14'-0"	-	-	-	-
	LPI 36A 56A	8'	1'-0"	1'-0"	1'-6"	2'-0"	2'-6"	-	-	1'-0"	1'-0"	1'-0"	1'-6"	2'-0"	2'-6"	-	-	1'-11"
		10'	1'-0"	1'-0"	1'-6"	2'-0"	2'-6"	-	-	2'-1"	1'-0"	1'-0"	1'-6"	2'-0"	2'-6"	-	-	3'-6"
		12'	1'-0"	1'-0"	1'-6"	2'-0"	2'-6"	-	-	3'-5"	1'-0"	1'-0"	1'-6"	2'-0"	3'-7"	-	-	5'-1"
		14'	1'-0"	1'-0"	1'-6"	2'-0"	2'-10"	-	-	4'-8"	1'-0"	1'-0"	1'-6"	2'-9"	4'-10"	-	-	6'-8"
		16'	1'-0"	1'-0"	1'-6"	2'-1"	4'-1"	-	-	6'-1"	1'-0"	1'-0"	2'-4"	4'-4"	6'-5"	-	-	-
		18'	1'-0"	1'-0"	1'-6"	3'-3"	5'-6"	-	-	7'-4"	1'-0"	1'-9"	3'-6"	5'-10"	8'-1"	-	-	-
		20'	1'-0"	1'-0"	2'-7"	4'-7"	6'-7"	-	-	8'-7"	1'-0"	2'-11"	4'-11"	7'-6"	10'-0"	-	-	-
		22'	1'-0"	1'-8"	3'-4"	5'-7"	8'-4"	-	-	10'-0"	2'-8"	4'-4"	6'-7"	8'-9"	-	-	-	-
		24'	1'-0"	2'-5"	4'-10"	6'-8"	9'-8"	-	-	11'-6"	4'-2"	5'-11"	7'-9"	10'-2"	-	-	-	-
		26'	2'-0"	4'-0"	5'-11"	7'-11"	10'-6"	-	-	-	5'-2"	7'-1"	9'-9"	12'-4"	-	-	-	-
		28'	2'-10"	5'-0"	7'-1"	9'-2"	12'-0"	-	-	-	6'-11"	9'-1"	11'-2"	14'-0"	-	-	-	-
		30'	3'-10"	6'-1"	8'-4"	10'-7"	13'-7"	-	-	-	8'-2"	10'-6"	12'-9"	15'-0"	-	-	-	-

Table 9. Circular Web Hole Chart for LPI Joists: 40 psf Live Load, 25 psf Dead Load, up to 24” OC (Cont’d)

Joist Depth (in.)	Joist Series	Clear Span	Circular Holes (including Obround Holes)															
			Distance from End Suport								Distance from Interior Support or Cantilever-End Support							
			Hole Diameter							Obround Hole	Hole Diameter							Obround Hole
			2"	4"	6"	8"	10"	12"	14"		2"	4"	6"	8"	10"	12"	14"	
16	LPI 30A	8'	1'-0"	1'-0"	1'-6"	2'-0"	2'-6"	3'-0"	-	1'-6"	1'-0"	1'-0"	1'-6"	2'-0"	2'-6"	3'-0"	-	2'-7"
		10'	1'-0"	1'-0"	1'-6"	2'-0"	2'-6"	3'-0"	-	2'-10"	1'-0"	1'-0"	1'-6"	2'-0"	2'-6"	3'-0"	-	4'-3"
		12'	1'-0"	1'-0"	1'-6"	2'-0"	2'-6"	3'-0"	-	4'-0"	1'-0"	1'-0"	1'-6"	2'-0"	2'-6"	3'-3"	-	5'-8"
		14'	1'-0"	1'-0"	1'-6"	2'-0"	2'-6"	3'-0"	-	5'-4"	1'-0"	1'-0"	1'-6"	2'-5"	3'-5"	4'-6"	-	-
		16'	1'-0"	1'-0"	1'-6"	2'-0"	2'-6"	3'-8"	-	6'-6"	1'-0"	1'-6"	2'-9"	3'-7"	4'-9"	6'-0"	-	-
		18'	1'-0"	1'-0"	1'-6"	2'-9"	3'-8"	5'-0"	-	8'-2"	1'-9"	2'-8"	4'-0"	4'-11"	6'-3"	7'-8"	-	-
		20'	1'-0"	1'-7"	2'-7"	3'-7"	5'-1"	6'-7"	-	9'-7"	2'-11"	4'-5"	5'-5"	6'-6"	8'-0"	9'-6"	-	-
		22'	1'-8"	2'-10"	3'-11"	5'-0"	6'-2"	7'-10"	-	-	4'-4"	5'-5"	7'-1"	8'-3"	9'-4"	11'-0"	-	-
		24'	2'-5"	3'-8"	4'-10"	6'-1"	7'-3"	9'-1"	-	-	5'-11"	7'-2"	8'-4"	9'-7"	11'-5"	-	-	-
		26'	4'-0"	5'-3"	5'-11"	7'-3"	9'-2"	10'-6"	-	-	7'-1"	8'-5"	9'-9"	11'-0"	13'-0"	-	-	-
		28'	5'-0"	6'-4"	7'-9"	8'-6"	9'-11"	12'-0"	-	-	9'-1"	10'-6"	11'-2"	13'-4"	-	-	-	-
		30'	6'-1"	7'-7"	8'-4"	9'-10"	11'-4"	12'-10"	-	-	10'-6"	12'-0"	13'-6"	14'-3"	-	-	-	-
	LPI 36A 56A	8'	1'-0"	1'-0"	1'-6"	2'-0"	2'-6"	3'-0"	-	1'-0"	1'-0"	1'-0"	1'-6"	2'-0"	2'-6"	3'-0"	-	1'-11"
		10'	1'-0"	1'-0"	1'-6"	2'-0"	2'-6"	3'-0"	-	2'-1"	1'-0"	1'-0"	1'-6"	2'-0"	2'-6"	3'-0"	-	3'-6"
		12'	1'-0"	1'-0"	1'-6"	2'-0"	2'-6"	3'-0"	-	3'-5"	1'-0"	1'-0"	1'-6"	2'-0"	2'-6"	3'-10"	-	5'-1"
		14'	1'-0"	1'-0"	1'-6"	2'-0"	2'-6"	3'-7"	-	4'-8"	1'-0"	1'-0"	1'-6"	2'-0"	3'-5"	5'-7"	-	6'-8"
		16'	1'-0"	1'-0"	1'-6"	2'-0"	2'-10"	4'-11"	-	6'-1"	1'-0"	1'-0"	1'-6"	3'-2"	5'-2"	7'-2"	-	-
		18'	1'-0"	1'-0"	1'-6"	2'-4"	4'-1"	5'-11"	-	7'-4"	1'-0"	1'-3"	3'-1"	4'-5"	6'-9"	9'-0"	-	-
		20'	1'-0"	1'-0"	1'-7"	3'-7"	5'-1"	7'-7"	-	8'-7"	1'-0"	2'-5"	4'-5"	6'-0"	8'-0"	-	-	-
		22'	1'-0"	1'-2"	2'-10"	4'-6"	6'-8"	8'-11"	-	10'-0"	2'-1"	3'-9"	5'-5"	7'-8"	9'-11"	-	-	-
		24'	1'-0"	1'-10"	3'-8"	5'-6"	7'-11"	10'-4"	-	11'-6"	3'-6"	5'-4"	7'-2"	9'-0"	11'-5"	-	-	-
		26'	1'-4"	3'-4"	5'-3"	7'-3"	9'-2"	11'-10"	-	-	5'-2"	6'-5"	8'-5"	11'-0"	13'-0"	-	-	-
		28'	2'-10"	4'-3"	6'-4"	8'-6"	10'-7"	12'-8"	-	-	6'-3"	8'-4"	10'-6"	12'-7"	-	-	-	-
		30'	3'-10"	5'-4"	7'-7"	9'-10"	12'-1"	14'-4"	-	-	8'-2"	9'-9"	12'-0"	14'-3"	-	-	-	-
18	LPI 36A 56A	12'	1'-0"	1'-0"	1'-6"	2'-0"	2'-6"	3'-0"	3'-6"	-	1'-0"	1'-0"	1'-6"	2'-0"	2'-6"	3'-0"	3'-6"	-
		14'	1'-0"	1'-0"	1'-6"	2'-0"	2'-6"	3'-0"	3'-6"	-	1'-0"	1'-0"	1'-6"	2'-0"	2'-6"	3'-0"	4'-6"	-
		16'	1'-0"	1'-0"	1'-6"	2'-0"	2'-6"	3'-0"	3'-8"	-	1'-0"	1'-0"	1'-6"	2'-0"	2'-6"	3'-7"	6'-0"	-
		18'	1'-0"	1'-0"	1'-6"	2'-0"	2'-6"	3'-0"	5'-1"	-	1'-0"	1'-0"	1'-6"	2'-0"	2'-8"	4'-11"	7'-8"	-
		20'	1'-0"	1'-0"	1'-6"	2'-0"	2'-6"	3'-7"	6'-1"	-	1'-0"	1'-0"	1'-6"	2'-0"	3'-11"	6'-6"	9'-0"	-
		22'	1'-0"	1'-0"	1'-6"	2'-0"	2'-6"	4'-6"	7'-3"	-	1'-0"	1'-0"	1'-6"	2'-8"	5'-5"	7'-8"	11'-0"	-
		24'	1'-0"	1'-0"	1'-6"	2'-0"	3'-1"	6'-1"	8'-6"	-	1'-0"	1'-0"	1'-9"	4'-2"	6'-7"	9'-7"	-	-
		26'	1'-0"	1'-0"	1'-6"	2'-0"	4'-8"	7'-3"	9'-10"	-	1'-0"	1'-2"	3'-2"	5'-10"	8'-5"	11'-1"	-	-
		28'	1'-0"	1'-0"	1'-6"	3'-7"	5'-8"	8'-6"	11'-4"	-	1'-0"	2'-9"	4'-10"	7'-0"	9'-9"	12'-7"	-	-
		30'	1'-0"	1'-0"	2'-4"	4'-7"	6'-10"	9'-10"	12'-11"	-	1'-5"	3'-8"	5'-11"	8'-3"	11'-3"	14'-3"	-	-
		32'	1'-0"	1'-0"	3'-3"	5'-8"	8'-1"	11'-4"	14'-6"	-	3'-1"	4'-9"	7'-2"	10'-5"	12'-10"	16'-0"	-	-
		34'	1'-0"	1'-9"	4'-4"	6'-11"	9'-5"	12'-0"	15'-5"	-	4'-2"	6'-9"	9'-4"	11'-11"	14'-5"	-	-	-
20	LPI 36A 56A	12'	1'-0"	1'-0"	1'-6"	2'-0"	2'-6"	3'-0"	3'-6"	-	1'-0"	1'-0"	1'-6"	2'-0"	2'-6"	3'-0"	3'-6"	-
		14'	1'-0"	1'-0"	1'-6"	2'-0"	2'-6"	3'-0"	3'-6"	-	1'-0"	1'-0"	1'-6"	2'-0"	2'-6"	3'-0"	3'-6"	-
		16'	1'-0"	1'-0"	1'-6"	2'-0"	2'-6"	3'-0"	3'-6"	-	1'-0"	1'-0"	1'-6"	2'-0"	2'-6"	3'-0"	3'-11"	-
		18'	1'-0"	1'-0"	1'-6"	2'-0"	2'-6"	3'-0"	3'-6"	-	1'-0"	1'-0"	1'-6"	2'-0"	2'-6"	3'-7"	5'-4"	-
		20'	1'-0"	1'-0"	1'-6"	2'-0"	2'-6"	3'-0"	4'-1"	-	1'-0"	1'-0"	1'-6"	2'-0"	2'-6"	5'-0"	7'-0"	-
		22'	1'-0"	1'-0"	1'-6"	2'-0"	2'-6"	3'-4"	5'-7"	-	1'-0"	1'-0"	1'-6"	2'-1"	3'-9"	6'-0"	8'-10"	-
		24'	1'-0"	1'-0"	1'-6"	2'-0"	2'-6"	4'-3"	6'-8"	-	1'-0"	1'-0"	1'-6"	3'-6"	5'-4"	7'-9"	10'-2"	-
		26'	1'-0"	1'-0"	1'-6"	2'-0"	3'-4"	5'-3"	7'-11"	-	1'-0"	1'-0"	2'-6"	4'-6"	7'-1"	9'-1"	11'-8"	-
		28'	1'-0"	1'-0"	1'-6"	2'-2"	4'-3"	6'-5"	9'-3"	-	1'-0"	2'-0"	4'-2"	6'-3"	8'-4"	10'-6"	13'-4"	-
		30'	1'-0"	1'-0"	1'-7"	3'-1"	5'-4"	8'-4"	10'-7"	-	1'-5"	2'-11"	5'-2"	7'-5"	9'-9"	12'-0"	15'-0"	-
		32'	1'-0"	1'-0"	2'-5"	4'-10"	6'-6"	8'-11"	12'-1"	-	2'-4"	4'-9"	6'-4"	8'-9"	11'-2"	13'-7"	-	-
		34'	1'-0"	1'-9"	3'-6"	6'-0"	7'-9"	10'-4"	13'-9"	-	4'-2"	5'-11"	8'-5"	10'-2"	12'-9"	15'-4"	-	-
22	LPI 36A 56A	16'	1'-0"	1'-0"	1'-6"	2'-0"	2'-6"	3'-0"	3'-6"	-	1'-0"	1'-0"	1'-6"	2'-0"	2'-6"	3'-0"	3'-6"	-
		18'	1'-0"	1'-0"	1'-6"	2'-0"	2'-6"	3'-0"	3'-6"	-	1'-0"	1'-0"	1'-6"	2'-0"	2'-6"	3'-0"	4'-0"	-
		20'	1'-0"	1'-0"	1'-6"	2'-0"	2'-6"	3'-0"	3'-6"	-	1'-0"	1'-0"	1'-6"	2'-0"	2'-6"	3'-5"	5'-6"	-
		22'	1'-0"	1'-0"	1'-6"	2'-0"	2'-6"	3'-0"	3'-11"	-	1'-0"	1'-0"	1'-6"	2'-0"	3'-3"	4'-11"	7'-2"	-
		24'	1'-0"	1'-0"	1'-6"	2'-0"	2'-6"	3'-1"	4'-11"	-	1'-0"	1'-0"	1'-6"	2'-4"	4'-2"	6'-7"	8'-5"	-
		26'	1'-0"	1'-0"	1'-6"	2'-0"	2'-6"	4'-0"	6'-7"	-	1'-0"	1'-0"	1'-10"	3'-10"	5'-10"	7'-9"	10'-5"	-
		28'	1'-0"	1'-0"	1'-6"	2'-0"	3'-7"	5'-8"	7'-10"	-	1'-0"	1'-4"	3'-5"	5'-7"	7'-0"	9'-1"	11'-11"	-
		30'	1'-0"	1'-0"	1'-6"	2'-4"	4'-7"	6'-10"	9'-1"	-	1'-5"	2'-11"	4'-5"	6'-8"	9'-0"	11'-3"	13'-6"	-
		32'	1'-0"	1'-0"	1'-8"	4'-1"	5'-8"	8'-1"	10'-6"	-	2'-4"	3'-11"	6'-4"	8'-0"	10'-5"	12'-10"	15'-3"	-
		34'	1'-0"	1'-0"	2'-7"	5'-2"	6'-11"	9'-5"	11'-2"	-	3'-4"	5'-11"	7'-7"	9'-4"	11'-11"	14'-5"	17'-0"	-
		36'	1'-0"	1'-10"	3'-8"	6'-5"	8'-2"	10'-0"	12'-9"	-	5'-4"	7'-2"	8'-11"	10'-9"	13'-6"	15'-4"	18'-0"	-
		38'	1'-0"	2'-11"	4'-10"	7'-8"	9'-7"	11'-6"	14'-4"	-	6'-7"	8'-6"	10'-5"	12'-4"	15'-2"	17'-1"	-	-
24	LPI 36A 56A	16'	1'-0"	1'-0"	1'-6"	2'-0"	2'-6"	3'-0"	3'-6"	-	1'-0"	1'-0"	1'-6"	2'-0"	2'-6"	3'-0"	3'-6"	-
		18'	1'-0"	1'-0"	1'-6"	2'-0"	2'-6"	3'-0"	3'-6"	-	1'-0"	1'-0"	1'-6"	2'-0"	2'-6"	3'-0"	3'-6"	-
		20'	1'-0"	1'-0"	1'-6"	2'-0"	2'-6"	3'-0"	3'-6"	-	1'-0"	1'-0"	1'-6"	2'-0"	2'-6"	3'-0"	4'-5"	-
		22'	1'-0"	1'-0"	1'-6"	2'-0"	2'-6"	3'-0"	3'-6"	-	1'-0"	1'-0"	1'-6"	2'-0"	2'-6"	3'-9"	6'-0"	-
		24'	1'-0"	1'-0"	1'-6"	2'-0"	2'-6"	3'-0"	3'-8"	-	1'-0"	1'-0"	1'-6"	2'-0"	3'-6"	5'-4"	7'-2"	-
		26'	1'-0"	1'-0"	1'-6"	2'-0"	2'-6"	3'-4"	5'-3"	-	1'-0"	1'-0"	1'-10"	3'-2"	5'-2"	7'-1"	9'-1"	-
		28'	1'-0"	1'-0"	1'-6"	2'-0"	2'-10"	4'-3"	6'-5"	-	1'-0"	1'-4"	2'-9"	4'-10"	6'-3"	8'-4"	10'-6"	-
		30'	1'-0"	1'-0"	1'-6"	2'-4"	3'-10"	5'-4"	7'-7"	-	1'-0"	2'-11"	4'-5"	5'-11"	8'-3"	9'-9"	12'-0"	-
		32'	1'-0"	1'-0"	1'-8"	3'-3"	4'-10"	6'-6"	8'-11"	-	2'-4"	3'-11"	5'-6"	7'-2"	9'-7"	11'-2"	13'-7"	-
		34'	1'-0"	1'-0"	2'-7"	4'-4"	6'-0"	7'-9"	10'-4"	-	3'-4"	5'-0"	6'-9"	9'-4"	11'-0"	12'-9"	15'-4"	-
		36'	1'-0"	1'-10"	3'-8"	5'-6"	7'-3"	9'-1"	11'-10"	-	5'-4"	6'-3"	8'-1"	10'-9"	12'-7"	14'-5"	17'-1"	-
		38'	1'-0"	2'-11"	4'-10"	6'-9"	8'-8"	10'-7"	12'-6"	-	6'-7"	8'-6"	9'-5"	12'-4"	14'-3"	16'-2"	18'-1"	-

Table 10. Rectangular Web Hole Chart for LPI Joists: 40 psf Live Load, 25 psf Dead Load, up to 24" OC

Joist Depth (in.)	Joist Series	Clear Span	Rectangular Holes																	
			Distance from End Suport									Distance from Interior Support or Cantilever-End Support								
			Maximum Hole Dimension: Depth or Width									Maximum Hole Dimension: Depth or Width								
			2"	4"	6"	8"	10"	12"	14"	16"	18"	2"	4"	6"	8"	10"	12"	14"	16"	18"
9 1/2	LPI 100 125 150	6'	1'-0"	1'-0"	1'-6"	2'-0"	2'-6"	3'-0"	-	-	-	1'-0"	1'-0"	1'-7"	2'-0"	2'-6"	3'-0"	-	-	-
		8'	1'-0"	1'-0"	1'-10"	2'-3"	2'-8"	3'-1"	3'-6"	-	-	1'-0"	1'-9"	3'-0"	3'-5"	3'-10"	-	-	-	-
		10'	1'-0"	1'-10"	3'-1"	3'-7"	4'-1"	4'-4"	4'-10"	-	-	1'-8"	3'-3"	4'-9"	5'-0"	-	-	-	-	-
		12'	1'-7"	2'-9"	4'-7"	4'-11"	5'-6"	5'-10"	-	-	-	3'-3"	4'-9"	-	-	-	-	-	-	-
		14'	2'-10"	4'-3"	5'-8"	6'-5"	6'-9"	-	-	-	-	4'-10"	6'-4"	-	-	-	-	-	-	-
		16'	4'-1"	5'-3"	7'-4"	7'-9"	-	-	-	-	-	6'-5"	8'-0"	-	-	-	-	-	-	-
		18'	5'-0"	6'-10"	8'-8"	-	-	-	-	-	-	7'-8"	-	-	-	-	-	-	-	-
	LPI 200 225 250	6'	1'-0"	1'-0"	1'-6"	2'-0"	2'-6"	3'-0"	-	-	-	1'-0"	1'-0"	1'-7"	2'-0"	2'-6"	3'-0"	-	-	-
		8'	1'-0"	1'-0"	1'-10"	2'-3"	2'-8"	3'-1"	3'-6"	-	-	1'-0"	1'-9"	3'-0"	3'-5"	3'-10"	-	-	-	-
		10'	1'-0"	1'-10"	3'-1"	3'-7"	4'-1"	4'-4"	4'-10"	-	-	1'-8"	3'-3"	4'-9"	5'-0"	-	-	-	-	-
		12'	1'-7"	2'-9"	4'-7"	4'-11"	5'-6"	5'-10"	-	-	-	3'-3"	4'-9"	-	-	-	-	-	-	-
		14'	2'-10"	4'-3"	5'-8"	6'-5"	6'-9"	-	-	-	-	4'-10"	6'-4"	-	-	-	-	-	-	-
		16'	4'-1"	5'-3"	7'-4"	7'-9"	-	-	-	-	-	6'-5"	8'-0"	-	-	-	-	-	-	-
		18'	5'-0"	6'-10"	8'-8"	-	-	-	-	-	-	7'-8"	-	-	-	-	-	-	-	-
	LPI 300 325	6'	1'-0"	1'-0"	1'-6"	2'-0"	2'-6"	3'-0"	-	-	-	1'-0"	1'-0"	1'-7"	2'-0"	2'-6"	3'-0"	-	-	-
		8'	1'-0"	1'-0"	1'-10"	2'-3"	2'-8"	3'-1"	3'-6"	-	-	1'-0"	1'-9"	3'-0"	3'-5"	3'-10"	-	-	-	-
		10'	1'-0"	1'-10"	3'-1"	3'-7"	4'-1"	4'-4"	4'-10"	-	-	1'-8"	3'-3"	4'-9"	5'-0"	-	-	-	-	-
		12'	1'-7"	2'-9"	4'-7"	4'-11"	5'-6"	5'-10"	-	-	-	3'-3"	4'-9"	-	-	-	-	-	-	-
		14'	2'-10"	4'-3"	5'-8"	6'-5"	6'-9"	-	-	-	-	4'-10"	6'-4"	-	-	-	-	-	-	-
		16'	4'-1"	5'-3"	7'-4"	7'-9"	-	-	-	-	-	6'-5"	8'-0"	-	-	-	-	-	-	-
		18'	5'-0"	6'-10"	8'-8"	-	-	-	-	-	-	7'-8"	-	-	-	-	-	-	-	-
		20'	6'-7"	8'-1"	-	-	-	-	-	-	-	9'-6"	-	-	-	-	-	-	-	-
11 7/8	LPI 100 125 150	6'	1'-0"	1'-0"	1'-6"	2'-0"	2'-6"	3'-0"	-	-	-	1'-0"	1'-0"	1'-6"	2'-1"	2'-6"	3'-0"	-	-	-
		8'	1'-0"	1'-0"	1'-6"	2'-6"	2'-11"	3'-4"	3'-11"	-	-	1'-0"	1'-4"	2'-4"	3'-7"	-	-	-	-	-
		10'	1'-0"	1'-4"	2'-7"	3'-10"	4'-4"	4'-10"	-	-	-	1'-8"	2'-8"	4'-0"	-	-	-	-	-	-
		12'	1'-3"	2'-6"	3'-8"	5'-2"	5'-10"	-	-	-	-	2'-11"	4'-2"	5'-5"	-	-	-	-	-	-
		14'	2'-6"	3'-7"	5'-0"	6'-9"	-	-	-	-	-	4'-6"	5'-11"	-	-	-	-	-	-	-
		16'	3'-8"	4'-11"	6'-6"	-	-	-	-	-	-	6'-0"	7'-2"	-	-	-	-	-	-	-
		18'	5'-0"	6'-5"	7'-9"	-	-	-	-	-	-	7'-8"	9'-0"	-	-	-	-	-	-	-
		20'	6'-1"	7'-7"	9'-1"	-	-	-	-	-	-	9'-0"	-	-	-	-	-	-	-	-
		22'	7'-10"	8'-11"	10'-7"	-	-	-	-	-	-	11'-0"	-	-	-	-	-	-	-	-
	LPI 200 225 250	6'	1'-0"	1'-0"	1'-6"	2'-0"	2'-6"	3'-0"	-	-	-	1'-0"	1'-0"	1'-6"	2'-1"	2'-6"	3'-0"	-	-	-
		8'	1'-0"	1'-0"	1'-6"	2'-6"	2'-11"	3'-4"	3'-11"	-	-	1'-0"	1'-4"	2'-4"	3'-7"	-	-	-	-	-
		10'	1'-0"	1'-4"	2'-7"	3'-10"	4'-4"	4'-10"	-	-	-	1'-8"	2'-8"	4'-0"	-	-	-	-	-	-
		12'	1'-3"	2'-6"	3'-8"	5'-2"	5'-10"	-	-	-	-	2'-11"	4'-2"	5'-5"	-	-	-	-	-	-
		14'	2'-6"	3'-7"	5'-0"	6'-9"	-	-	-	-	-	4'-6"	5'-11"	-	-	-	-	-	-	-
		16'	3'-8"	4'-11"	6'-6"	-	-	-	-	-	-	6'-0"	7'-2"	-	-	-	-	-	-	-
		18'	5'-0"	6'-5"	7'-9"	-	-	-	-	-	-	7'-8"	9'-0"	-	-	-	-	-	-	-
		20'	6'-1"	7'-7"	9'-1"	-	-	-	-	-	-	9'-0"	-	-	-	-	-	-	-	-
		22'	7'-10"	8'-11"	10'-7"	-	-	-	-	-	-	11'-0"	-	-	-	-	-	-	-	-
	LPI 300 325 350	6'	1'-0"	1'-0"	1'-6"	2'-0"	2'-6"	3'-0"	-	-	-	1'-0"	1'-0"	1'-6"	2'-1"	2'-6"	3'-0"	-	-	-
		8'	1'-0"	1'-0"	1'-6"	2'-6"	2'-11"	3'-4"	3'-11"	-	-	1'-0"	1'-4"	2'-4"	3'-7"	-	-	-	-	-
		10'	1'-0"	1'-4"	2'-7"	3'-10"	4'-4"	4'-10"	-	-	-	1'-8"	2'-8"	4'-0"	-	-	-	-	-	-
		12'	1'-3"	2'-6"	3'-8"	5'-2"	5'-10"	-	-	-	-	2'-11"	4'-2"	5'-5"	-	-	-	-	-	-
		14'	2'-6"	3'-7"	5'-0"	6'-9"	-	-	-	-	-	4'-6"	5'-11"	-	-	-	-	-	-	-
		16'	3'-8"	4'-11"	6'-6"	-	-	-	-	-	-	6'-0"	7'-2"	-	-	-	-	-	-	-
		18'	5'-0"	6'-5"	7'-9"	-	-	-	-	-	-	7'-8"	9'-0"	-	-	-	-	-	-	-
		20'	6'-1"	7'-7"	9'-1"	-	-	-	-	-	-	9'-0"	-	-	-	-	-	-	-	-
		22'	7'-10"	8'-11"	10'-7"	-	-	-	-	-	-	11'-0"	-	-	-	-	-	-	-	-
		24'	9'-1"	10'-4"	-	-	-	-	-	-	-	-	-	-	-	-	-	-	-	-
	LPI 550	6'	1'-0"	1'-0"	1'-6"	2'-0"	2'-6"	3'-0"	-	-	-	1'-0"	1'-0"	1'-6"	2'-1"	2'-6"	3'-0"	-	-	-
		8'	1'-0"	1'-0"	1'-6"	2'-6"	2'-11"	3'-4"	3'-11"	-	-	1'-0"	1'-4"	2'-4"	3'-7"	-	-	-	-	-
		10'	1'-0"	1'-4"	2'-7"	3'-10"	4'-4"	4'-10"	-	-	-	1'-8"	2'-8"	4'-0"	-	-	-	-	-	-
		12'	1'-3"	2'-6"	3'-8"	5'-2"	5'-10"	-	-	-	-	2'-11"	4'-2"	5'-5"	-	-	-	-	-	-
		14'	2'-6"	3'-7"	5'-0"	6'-9"	-	-	-	-	-	4'-6"	5'-11"	-	-	-	-	-	-	-
		16'	3'-8"	4'-11"	6'-6"	-	-	-	-	-	-	6'-0"	7'-2"	-	-	-	-	-	-	-
		18'	5'-0"	6'-5"	7'-9"	-	-	-	-	-	-	7'-8"	9'-0"	-	-	-	-	-	-	-
		20'	6'-1"	7'-7"	9'-1"	-	-	-	-	-	-	9'-0"	-	-	-	-	-	-	-	-
		22'	7'-10"	8'-11"	10'-7"	-	-	-	-	-	-	11'-0"	-	-	-	-	-	-	-	-
		24'	9'-1"	10'-4"	-	-	-	-	-	-	-	-	-	-	-	-	-	-	-	-
		26'	10'-6"	11'-10"	-	-	-	-	-	-	-	-	-	-	-	-	-	-	-	-
		28'	11'-4"	13'-5"	-	-	-	-	-	-	-	-	-	-	-	-	-	-	-	-
14	LPI 200 225 250	8'	1'-0"	1'-0"	1'-6"	2'-0"	2'-6"	3'-0"	3'-6"	4'-0"	-	1'-0"	1'-0"	1'-6"	2'-0"	3'-0"	3'-7"	-	-	-
		10'	1'-0"	1'-0"	1'-6"	2'-0"	3'-1"	3'-7"	4'-4"	-	-	1'-0"	1'-0"	1'-6"	2'-8"	4'-6"	-	-	-	-
		12'	1'-0"	1'-0"	1'-6"	2'-6"	4'-4"	5'-2"	5'-10"	-	-	1'-0"	1'-0"	2'-4"	4'-2"	-	-	-	-	-
		14'	1'-0"	1'-0"	1'-10"	3'-7"	5'-8"	6'-5"	-	-	-	1'-0"	2'-0"	3'-10"	5'-7"	-	-	-	-	-
		16'	1'-0"	1'-3"	3'-3"	4'-11"	7'-4"	7'-9"	-	-	-	1'-11"	3'-7"	5'-2"	7'-2"	-	-	-	-	-

Table 10. Rectangular Web Hole Chart for LPI Joists: 40 psf Live Load, 25 psf Dead Load, up to 24" OC (Cont'd)

Joist Depth (in.)	Joist Series	Clear Span	Rectangular Holes																	
			Distance from End Suport									Distance from Interior Support or Cantilever-End Support								
			Maximum Hole Dimension: Depth or Width									Maximum Hole Dimension: Depth or Width								
			2"	4"	6"	8"	10"	12"	14"	16"	18"	2"	4"	6"	8"	10"	12"	14"	16"	18"
14	LPI 200 225 250	18'	1'-0"	2'-9"	4'-1"	6'-5"	8'-8"	-	-	-	-	3'-6"	4'-11"	6'-9"	9'-0"	-	-	-	-	-
		20'	2'-1"	3'-7"	5'-7"	7'-7"	-	-	-	-	-	4'-11"	6'-6"	8'-6"	-	-	-	-	-	-
		22'	3'-4"	5'-0"	6'-8"	8'-11"	-	-	-	-	-	6'-0"	8'-3"	9'-11"	-	-	-	-	-	-
		24'	4'-3"	6'-1"	7'-11"	10'-4"	-	-	-	-	-	7'-9"	9'-7"	12'-0"	-	-	-	-	-	-
		26'	5'-3"	7'-3"	9'-2"	11'-10"	-	-	-	-	-	9'-1"	11'-0"	-	-	-	-	-	-	-
	LPI 300 325 350 550	8'	1'-0"	1'-0"	1'-6"	2'-0"	2'-6"	3'-0"	3'-6"	4'-0"	-	1'-0"	1'-0"	1'-6"	2'-0"	3'-0"	3'-7"	-	-	-
		10'	1'-0"	1'-0"	1'-6"	2'-0"	3'-1"	3'-7"	4'-4"	-	-	1'-0"	1'-0"	1'-6"	2'-8"	4'-6"	-	-	-	-
		12'	1'-0"	1'-0"	1'-6"	2'-6"	4'-4"	5'-2"	5'-10"	-	-	1'-0"	1'-0"	2'-4"	4'-2"	-	-	-	-	-
		14'	1'-0"	1'-0"	1'-10"	3'-7"	5'-8"	6'-5"	-	-	-	1'-0"	2'-0"	3'-10"	5'-7"	-	-	-	-	-
		16'	1'-0"	1'-3"	3'-3"	4'-11"	7'-4"	7'-9"	-	-	-	1'-11"	3'-7"	5'-2"	7'-2"	-	-	-	-	-
		18'	1'-0"	2'-9"	4'-1"	6'-5"	8'-8"	-	-	-	-	3'-6"	4'-11"	6'-9"	9'-0"	-	-	-	-	-
		20'	2'-1"	3'-7"	5'-7"	7'-7"	-	-	-	-	-	4'-11"	6'-6"	8'-6"	-	-	-	-	-	-
		22'	3'-4"	5'-0"	6'-8"	8'-11"	-	-	-	-	-	6'-0"	8'-3"	9'-11"	-	-	-	-	-	-
		24'	4'-3"	6'-1"	7'-11"	10'-4"	-	-	-	-	-	7'-9"	9'-7"	12'-0"	-	-	-	-	-	-
		26'	5'-3"	7'-3"	9'-2"	11'-10"	-	-	-	-	-	9'-1"	11'-0"	-	-	-	-	-	-	-
		28'	7'-1"	8'-6"	10'-7"	13'-5"	-	-	-	-	-	10'-6"	12'-7"	-	-	-	-	-	-	-
		30'	8'-4"	9'-10"	12'-1"	14'-4"	-	-	-	-	-	12'-9"	14'-3"	-	-	-	-	-	-	-
16	LPI 200 225 250	8'	1'-0"	1'-0"	1'-6"	2'-0"	2'-6"	3'-0"	3'-6"	-	-	1'-0"	1'-0"	1'-6"	2'-0"	2'-6"	4'-0"	-	-	-
		10'	1'-0"	1'-0"	1'-6"	2'-0"	2'-6"	4'-1"	4'-10"	-	-	1'-0"	1'-0"	1'-6"	2'-2"	3'-9"	-	-	-	-
		12'	1'-0"	1'-0"	1'-6"	2'-0"	3'-5"	5'-6"	-	-	-	1'-0"	1'-0"	2'-0"	3'-7"	5'-5"	-	-	-	-
		14'	1'-0"	1'-0"	1'-6"	2'-10"	4'-8"	6'-9"	-	-	-	1'-0"	2'-0"	3'-5"	4'-10"	7'-0"	-	-	-	-
		16'	1'-0"	1'-3"	2'-6"	4'-1"	6'-1"	-	-	-	-	1'-11"	3'-2"	4'-9"	6'-9"	-	-	-	-	-
		18'	1'-0"	2'-4"	3'-8"	5'-6"	7'-4"	-	-	-	-	3'-1"	4'-11"	6'-3"	8'-1"	-	-	-	-	-
		20'	2'-1"	3'-7"	5'-1"	7'-1"	9'-1"	-	-	-	-	4'-5"	6'-6"	8'-0"	10'-0"	-	-	-	-	-
		22'	2'-10"	4'-6"	6'-2"	8'-4"	10'-7"	-	-	-	-	6'-0"	7'-8"	9'-4"	-	-	-	-	-	-
		24'	4'-3"	6'-1"	7'-11"	9'-8"	11'-6"	-	-	-	-	7'-9"	9'-7"	11'-5"	-	-	-	-	-	-
		26'	5'-3"	7'-3"	9'-2"	11'-2"	-	-	-	-	-	9'-1"	11'-0"	13'-0"	-	-	-	-	-	-
		28'	6'-4"	8'-6"	9'-11"	12'-0"	-	-	-	-	-	10'-6"	12'-7"	-	-	-	-	-	-	-
		30'	7'-7"	9'-10"	11'-4"	13'-7"	-	-	-	-	-	12'-0"	14'-3"	-	-	-	-	-	-	-
	LPI 300 325 350 550	8'	1'-0"	1'-0"	1'-6"	2'-0"	2'-6"	3'-0"	3'-6"	-	-	1'-0"	1'-0"	1'-6"	2'-0"	2'-6"	4'-0"	-	-	-
		10'	1'-0"	1'-0"	1'-6"	2'-0"	2'-6"	4'-1"	4'-10"	-	-	1'-0"	1'-0"	1'-6"	2'-2"	3'-9"	-	-	-	-
		12'	1'-0"	1'-0"	1'-6"	2'-0"	3'-5"	5'-6"	-	-	-	1'-0"	1'-0"	2'-0"	3'-7"	5'-5"	-	-	-	-
		14'	1'-0"	1'-0"	1'-6"	2'-10"	4'-8"	6'-9"	-	-	-	1'-0"	2'-0"	3'-5"	4'-10"	7'-0"	-	-	-	-
		16'	1'-0"	1'-3"	2'-6"	4'-1"	6'-1"	-	-	-	-	1'-11"	3'-2"	4'-9"	6'-9"	-	-	-	-	-
		18'	1'-0"	2'-4"	3'-8"	5'-6"	7'-4"	-	-	-	-	3'-1"	4'-11"	6'-3"	8'-1"	-	-	-	-	-
		20'	2'-1"	3'-7"	5'-1"	7'-1"	9'-1"	-	-	-	-	4'-5"	6'-6"	8'-0"	10'-0"	-	-	-	-	-
		22'	2'-10"	4'-6"	6'-2"	8'-4"	10'-7"	-	-	-	-	6'-0"	7'-8"	9'-4"	-	-	-	-	-	-
		24'	4'-3"	6'-1"	7'-11"	9'-8"	11'-6"	-	-	-	-	7'-9"	9'-7"	11'-5"	-	-	-	-	-	-
		26'	5'-3"	7'-3"	9'-2"	11'-2"	-	-	-	-	-	9'-1"	11'-0"	13'-0"	-	-	-	-	-	-
		28'	6'-4"	8'-6"	9'-11"	12'-0"	-	-	-	-	-	10'-6"	12'-7"	-	-	-	-	-	-	-
		30'	7'-7"	9'-10"	11'-4"	13'-7"	-	-	-	-	-	12'-0"	14'-3"	-	-	-	-	-	-	-
9 1/2	LPI 26A	6'	1'-0"	1'-0"	1'-6"	2'-0"	2'-6"	3'-0"	-	-	-	1'-0"	1'-0"	1'-6"	2'-0"	2'-6"	3'-0"	-	-	-
		8'	1'-0"	1'-0"	1'-6"	2'-0"	2'-6"	3'-0"	3'-6"	4'-0"	-	1'-0"	1'-0"	2'-7"	3'-0"	3'-5"	4'-0"	-	-	-
		10'	1'-0"	1'-1"	2'-7"	3'-1"	3'-7"	4'-1"	4'-7"	-	-	1'-0"	2'-5"	4'-0"	4'-6"	5'-0"	-	-	-	-
		12'	1'-0"	2'-2"	4'-0"	4'-4"	4'-11"	5'-6"	-	-	-	2'-4"	3'-10"	5'-8"	-	-	-	-	-	-
		14'	1'-10"	3'-3"	5'-4"	5'-8"	6'-5"	6'-9"	-	-	-	3'-10"	5'-3"	-	-	-	-	-	-	-
		16'	2'-10"	4'-6"	6'-6"	6'-11"	7'-9"	-	-	-	-	5'-2"	6'-9"	-	-	-	-	-	-	-
		18'	4'-1"	5'-11"	7'-9"	8'-8"	-	-	-	-	-	6'-9"	8'-7"	-	-	-	-	-	-	-
	LPI 30A	6'	1'-0"	1'-0"	1'-6"	2'-0"	2'-6"	3'-0"	-	-	-	1'-0"	1'-0"	1'-6"	2'-0"	2'-6"	3'-0"	-	-	-
		8'	1'-0"	1'-0"	1'-6"	2'-0"	2'-6"	3'-0"	3'-6"	4'-0"	-	1'-0"	1'-0"	2'-7"	3'-0"	3'-5"	4'-0"	-	-	-
		10'	1'-0"	1'-1"	2'-7"	3'-1"	3'-7"	4'-1"	4'-7"	-	-	1'-0"	2'-5"	4'-0"	4'-6"	5'-0"	-	-	-	-
		12'	1'-0"	2'-2"	4'-0"	4'-4"	4'-11"	5'-6"	-	-	-	2'-4"	3'-10"	5'-8"	-	-	-	-	-	-
		14'	1'-10"	3'-3"	5'-4"	5'-8"	6'-5"	6'-9"	-	-	-	3'-10"	5'-3"	-	-	-	-	-	-	-
		16'	2'-10"	4'-6"	6'-6"	6'-11"	7'-9"	-	-	-	-	5'-2"	6'-9"	-	-	-	-	-	-	-
		18'	4'-1"	5'-11"	7'-9"	8'-8"	-	-	-	-	-	6'-9"	8'-7"	-	-	-	-	-	-	-
11 7/8	LPI 26A	6'	1'-0"	1'-0"	1'-6"	2'-0"	2'-6"	3'-0"	-	-	-	1'-0"	1'-0"	1'-6"	2'-0"	2'-6"	3'-0"	-	-	-
		8'	1'-0"	1'-0"	1'-6"	2'-1"	2'-6"	3'-1"	3'-6"	-	-	1'-0"	1'-0"	1'-9"	3'-2"	3'-7"	-	-	-	-
		10'	1'-0"	1'-0"	1'-10"	3'-4"	3'-10"	4'-4"	4'-10"	-	-	1'-0"	1'-11"	3'-3"	4'-9"	-	-	-	-	-
		12'	1'-0"	1'-7"	3'-1"	4'-7"	5'-2"	5'-10"	-	-	-	2'-0"	3'-3"	4'-9"	-	-	-	-	-	-
		14'	1'-5"	2'-10"	4'-3"	6'-1"	6'-9"	-	-	-	-	3'-5"	4'-10"	6'-4"	-	-	-	-	-	-
		16'	2'-10"	4'-1"	5'-8"	7'-4"	-	-	-	-	-	4'-9"	6'-5"	8'-0"	-	-	-	-	-	-
		18'	3'-8"	5'-6"	6'-10"	8'-8"	-	-	-	-	-	6'-3"	8'-1"	-	-	-	-	-	-	-
		20'	5'-1"	6'-7"	8'-1"	-	-	-	-	-	-	8'-0"	9'-6"	-	-	-	-	-	-	-
		22'	6'-2"	7'-10"	10'-0"	-	-	-	-	-	-	9'-4"	-	-	-	-	-	-	-	-

Table 10. Rectangular Web Hole Chart for LPI Joists: 40 psf Live Load, 25 psf Dead Load, up to 24" OC (Cont'd)

Joist Depth (in.)	Joist Series	Clear Span	Rectangular Holes																	
			Distance from End Suport									Distance from Interior Support or Cantilever-End Support								
			Maximum Hole Dimension: Depth or Width									Maximum Hole Dimension: Depth or Width								
			2"	4"	6"	8"	10"	12"	14"	16"	18"	2"	4"	6"	8"	10"	12"	14"	16"	18"
11 7/8	LPI 30A	6'	1'-0"	1'-0"	1'-6"	2'-0"	2'-6"	3'-0"	-	-	-	1'-0"	1'-0"	1'-6"	2'-0"	2'-6"	3'-0"	-	-	-
		8'	1'-0"	1'-0"	1'-6"	2'-1"	2'-6"	3'-1"	3'-6"	-	-	1'-0"	1'-0"	1'-9"	3'-2"	3'-7"	-	-	-	-
		10'	1'-0"	1'-0"	1'-10"	3'-4"	3'-10"	4'-4"	4'-10"	-	-	1'-0"	1'-11"	3'-3"	4'-9"	-	-	-	-	-
		12'	1'-0"	1'-7"	3'-1"	4'-7"	5'-2"	5'-10"	-	-	-	2'-0"	3'-3"	4'-9"	-	-	-	-	-	-
		14'	1'-5"	2'-10"	4'-3"	6'-1"	6'-9"	-	-	-	-	3'-5"	4'-10"	6'-4"	-	-	-	-	-	-
		16'	2'-10"	4'-1"	5'-8"	7'-4"	-	-	-	-	-	4'-9"	6'-5"	8'-0"	-	-	-	-	-	-
		18'	3'-8"	5'-6"	6'-10"	8'-8"	-	-	-	-	-	6'-3"	8'-1"	-	-	-	-	-	-	-
		20'	5'-1"	6'-7"	8'-1"	-	-	-	-	-	-	8'-0"	9'-6"	-	-	-	-	-	-	-
		22'	6'-2"	7'-10"	10'-0"	-	-	-	-	-	-	9'-4"	-	-	-	-	-	-	-	-
	LPI 36A	6'	1'-0"	1'-0"	1'-6"	2'-0"	2'-6"	3'-0"	-	-	-	1'-0"	1'-0"	1'-6"	2'-0"	2'-6"	3'-0"	-	-	-
		8'	1'-0"	1'-0"	1'-6"	2'-1"	2'-6"	3'-1"	3'-6"	-	-	1'-0"	1'-0"	1'-9"	3'-2"	3'-7"	-	-	-	-
		10'	1'-0"	1'-0"	1'-10"	3'-4"	3'-10"	4'-4"	4'-10"	-	-	1'-0"	1'-11"	3'-3"	4'-9"	-	-	-	-	-
		12'	1'-0"	1'-7"	3'-1"	4'-7"	5'-2"	5'-10"	-	-	-	2'-0"	3'-3"	4'-9"	-	-	-	-	-	-
		14'	1'-5"	2'-10"	4'-3"	6'-1"	6'-9"	-	-	-	-	3'-5"	4'-10"	6'-4"	-	-	-	-	-	-
		16'	2'-10"	4'-1"	5'-8"	7'-4"	-	-	-	-	-	4'-9"	6'-5"	8'-0"	-	-	-	-	-	-
		18'	3'-8"	5'-6"	6'-10"	8'-8"	-	-	-	-	-	6'-3"	8'-1"	-	-	-	-	-	-	-
		20'	5'-1"	6'-7"	8'-1"	-	-	-	-	-	-	8'-0"	9'-6"	-	-	-	-	-	-	-
		22'	6'-2"	7'-10"	10'-0"	-	-	-	-	-	-	9'-4"	-	-	-	-	-	-	-	-
		24'	7'-11"	9'-1"	10'-11"	-	-	-	-	-	-	11'-5"	-	-	-	-	-	-	-	-
	LPI 56A	6'	1'-0"	1'-0"	1'-6"	2'-0"	2'-6"	3'-0"	-	-	-	1'-0"	1'-0"	1'-6"	2'-0"	2'-6"	3'-0"	-	-	-
		8'	1'-0"	1'-0"	1'-6"	2'-1"	2'-6"	3'-1"	3'-6"	-	-	1'-0"	1'-0"	1'-9"	3'-2"	3'-7"	-	-	-	-
		10'	1'-0"	1'-0"	1'-10"	3'-4"	3'-10"	4'-4"	4'-10"	-	-	1'-0"	1'-11"	3'-3"	4'-9"	-	-	-	-	-
		12'	1'-0"	1'-7"	3'-1"	4'-7"	5'-2"	5'-10"	-	-	-	2'-0"	3'-3"	4'-9"	-	-	-	-	-	-
		14'	1'-5"	2'-10"	4'-3"	6'-1"	6'-9"	-	-	-	-	3'-5"	4'-10"	6'-4"	-	-	-	-	-	-
		16'	2'-10"	4'-1"	5'-8"	7'-4"	-	-	-	-	-	4'-9"	6'-5"	8'-0"	-	-	-	-	-	-
		18'	3'-8"	5'-6"	6'-10"	8'-8"	-	-	-	-	-	6'-3"	8'-1"	-	-	-	-	-	-	-
		20'	5'-1"	6'-7"	8'-1"	-	-	-	-	-	-	8'-0"	9'-6"	-	-	-	-	-	-	-
		22'	6'-2"	7'-10"	10'-0"	-	-	-	-	-	-	9'-4"	-	-	-	-	-	-	-	-
		24'	7'-11"	9'-1"	10'-11"	-	-	-	-	-	-	11'-5"	-	-	-	-	-	-	-	-
		26'	9'-2"	10'-6"	12'-6"	-	-	-	-	-	-	13'-0"	-	-	-	-	-	-	-	-
		28'	10'-7"	12'-0"	-	-	-	-	-	-	-	-	-	-	-	-	-	-	-	-
14	LPI 30A	8'	1'-0"	1'-0"	1'-6"	2'-0"	2'-6"	3'-0"	3'-6"	4'-0"	-	1'-0"	1'-0"	1'-6"	2'-0"	2'-6"	3'-0"	3'-10"	-	-
		10'	1'-0"	1'-0"	1'-6"	2'-0"	2'-7"	3'-1"	3'-10"	4'-10"	-	1'-0"	1'-0"	1'-6"	2'-0"	4'-0"	4'-9"	-	-	-
		12'	1'-0"	1'-0"	1'-6"	2'-0"	3'-8"	4'-7"	5'-2"	-	-	1'-0"	1'-0"	1'-6"	3'-3"	5'-5"	-	-	-	-
		14'	1'-0"	1'-0"	1'-6"	2'-10"	5'-0"	5'-8"	6'-9"	-	-	1'-0"	1'-0"	2'-9"	4'-10"	-	-	-	-	-
		16'	1'-0"	1'-0"	2'-1"	4'-1"	6'-6"	7'-4"	-	-	-	1'-0"	2'-4"	4'-4"	6'-5"	-	-	-	-	-
		18'	1'-0"	1'-5"	3'-3"	5'-6"	7'-9"	8'-8"	-	-	-	1'-9"	3'-6"	5'-10"	8'-1"	-	-	-	-	-
		20'	1'-0"	2'-7"	4'-7"	6'-7"	9'-1"	-	-	-	-	2'-11"	4'-11"	7'-0"	9'-6"	-	-	-	-	-
		22'	1'-8"	3'-4"	5'-7"	7'-10"	10'-7"	-	-	-	-	4'-4"	6'-7"	8'-9"	11'-0"	-	-	-	-	-
		24'	2'-5"	4'-10"	6'-8"	9'-1"	-	-	-	-	-	5'-11"	7'-9"	10'-2"	-	-	-	-	-	-
		26'	4'-0"	5'-11"	7'-11"	10'-6"	-	-	-	-	-	7'-9"	9'-9"	11'-8"	-	-	-	-	-	-
		28'	5'-0"	7'-1"	9'-2"	12'-0"	-	-	-	-	-	9'-1"	11'-2"	13'-4"	-	-	-	-	-	-
	LPI 36A 56A	8'	1'-0"	1'-0"	1'-6"	2'-0"	2'-6"	3'-0"	3'-6"	4'-0"	-	1'-0"	1'-0"	1'-6"	2'-0"	2'-6"	3'-0"	3'-10"	-	-
		10'	1'-0"	1'-0"	1'-6"	2'-0"	2'-7"	3'-1"	3'-10"	4'-10"	-	1'-0"	1'-0"	1'-6"	2'-0"	4'-0"	4'-9"	-	-	-
		12'	1'-0"	1'-0"	1'-6"	2'-0"	3'-8"	4'-7"	5'-2"	-	-	1'-0"	1'-0"	1'-6"	3'-3"	5'-5"	-	-	-	-
		14'	1'-0"	1'-0"	1'-6"	2'-10"	5'-0"	5'-8"	6'-9"	-	-	1'-0"	1'-0"	2'-9"	4'-10"	-	-	-	-	-
		16'	1'-0"	1'-0"	2'-1"	4'-1"	6'-6"	7'-4"	-	-	-	1'-0"	2'-4"	4'-4"	6'-5"	-	-	-	-	-
		18'	1'-0"	1'-5"	3'-3"	5'-6"	7'-9"	8'-8"	-	-	-	1'-9"	3'-6"	5'-10"	8'-1"	-	-	-	-	-
	LPI 36A 56A	20'	1'-0"	2'-7"	4'-7"	6'-7"	9'-1"	-	-	-	-	2'-11"	4'-11"	7'-0"	9'-6"	-	-	-	-	-
		22'	1'-8"	3'-4"	5'-7"	7'-10"	10'-7"	-	-	-	-	4'-4"	6'-7"	8'-9"	11'-0"	-	-	-	-	-
		24'	2'-5"	4'-10"	6'-8"	9'-1"	-	-	-	-	-	5'-11"	7'-9"	10'-2"	-	-	-	-	-	-
		26'	4'-0"	5'-11"	7'-11"	10'-6"	-	-	-	-	-	7'-9"	9'-9"	11'-8"	-	-	-	-	-	-
		28'	5'-0"	7'-1"	9'-2"	12'-0"	-	-	-	-	-	9'-1"	11'-2"	13'-4"	-	-	-	-	-	-
		30'	6'-1"	8'-4"	10'-7"	13'-7"	-	-	-	-	-	10'-6"	12'-9"	15'-0"	-	-	-	-	-	-

Table 10. Rectangular Web Hole Chart for LPI Joists: 40 psf Live Load, 25 psf Dead Load, up to 24" OC (Cont'd)

Joist Depth (in.)	Joist Series	Clear Span	Rectangular Holes																	
			Distance from End Suport									Distance from Interior Support or Cantilever-End Support								
			Maximum Hole Dimension: Depth or Width									Maximum Hole Dimension: Depth or Width								
			2"	4"	6"	8"	10"	12"	14"	16"	18"	2"	4"	6"	8"	10"	12"	14"	16"	18"
16	LPI 30A	8'	1'-0"	1'-0"	1'-6"	2'-0"	2'-6"	3'-0"	3'-6"	4'-0"	-	1'-0"	1'-0"	1'-6"	2'-0"	2'-6"	3'-5"	-	-	-
		10'	1'-0"	1'-0"	1'-6"	2'-0"	2'-6"	3'-7"	4'-4"	-	-	1'-0"	1'-0"	1'-6"	2'-0"	3'-0"	-	-	-	-
		12'	1'-0"	1'-0"	1'-6"	2'-0"	2'-9"	4'-11"	5'-10"	-	-	1'-0"	1'-0"	1'-6"	2'-8"	4'-6"	-	-	-	-
		14'	1'-0"	1'-0"	1'-6"	2'-2"	3'-11"	6'-5"	-	-	-	1'-0"	1'-0"	2'-5"	4'-2"	5'-11"	-	-	-	-
		16'	1'-0"	1'-0"	1'-8"	3'-3"	5'-3"	7'-9"	-	-	-	1'-0"	1'-11"	3'-7"	5'-7"	7'-7"	-	-	-	-
		18'	1'-0"	1'-0"	2'-9"	4'-7"	6'-10"	-	-	-	-	1'-9"	3'-6"	4'-11"	7'-2"	-	-	-	-	-
		20'	1'-0"	2'-1"	3'-7"	5'-7"	8'-1"	-	-	-	-	2'-11"	4'-11"	6'-6"	8'-6"	-	-	-	-	-
		22'	1'-8"	3'-4"	5'-0"	7'-3"	9'-5"	-	-	-	-	4'-4"	6'-0"	8'-3"	10'-5"	-	-	-	-	-
		24'	2'-5"	4'-3"	6'-1"	8'-6"	10'-11"	-	-	-	-	5'-11"	7'-9"	9'-7"	12'-0"	-	-	-	-	-
		26'	4'-0"	5'-3"	7'-3"	9'-10"	12'-6"	-	-	-	-	7'-1"	9'-1"	11'-0"	-	-	-	-	-	-
		28'	5'-0"	7'-1"	8'-6"	11'-4"	13'-5"	-	-	-	-	9'-1"	10'-6"	12'-7"	-	-	-	-	-	-
		30'	6'-1"	8'-4"	9'-10"	12'-1"	-	-	-	-	-	10'-6"	12'-0"	14'-3"	-	-	-	-	-	-
	LPI 36A 56A	8'	1'-0"	1'-0"	1'-6"	2'-0"	2'-6"	3'-0"	3'-6"	4'-0"	-	1'-0"	1'-0"	1'-6"	2'-0"	2'-6"	3'-5"	-	-	-
		10'	1'-0"	1'-0"	1'-6"	2'-0"	2'-6"	3'-7"	4'-4"	-	-	1'-0"	1'-0"	1'-6"	2'-0"	3'-0"	-	-	-	-
		12'	1'-0"	1'-0"	1'-6"	2'-0"	2'-9"	4'-11"	5'-10"	-	-	1'-0"	1'-0"	1'-6"	2'-8"	4'-6"	-	-	-	-
		14'	1'-0"	1'-0"	1'-6"	2'-2"	3'-11"	6'-5"	-	-	-	1'-0"	1'-0"	2'-5"	4'-2"	5'-11"	-	-	-	-
		16'	1'-0"	1'-0"	1'-8"	3'-3"	5'-3"	7'-9"	-	-	-	1'-0"	1'-11"	3'-7"	5'-7"	7'-7"	-	-	-	-
		18'	1'-0"	1'-0"	2'-9"	4'-7"	6'-10"	-	-	-	-	1'-9"	3'-6"	4'-11"	7'-2"	-	-	-	-	-
		20'	1'-0"	2'-1"	3'-7"	5'-7"	8'-1"	-	-	-	-	2'-11"	4'-11"	6'-6"	8'-6"	-	-	-	-	-
		22'	1'-8"	3'-4"	5'-0"	7'-3"	9'-5"	-	-	-	-	4'-4"	6'-0"	8'-3"	10'-5"	-	-	-	-	-
		24'	2'-5"	4'-3"	6'-1"	8'-6"	10'-11"	-	-	-	-	5'-11"	7'-9"	9'-7"	12'-0"	-	-	-	-	-
		26'	4'-0"	5'-3"	7'-3"	9'-10"	12'-6"	-	-	-	-	7'-1"	9'-1"	11'-0"	-	-	-	-	-	-
		28'	5'-0"	7'-1"	8'-6"	11'-4"	13'-5"	-	-	-	-	9'-1"	10'-6"	12'-7"	-	-	-	-	-	-
		30'	6'-1"	8'-4"	9'-10"	12'-1"	-	-	-	-	-	10'-6"	12'-0"	14'-3"	-	-	-	-	-	-
18	LPI 36A 56A	12'	1'-0"	1'-0"	1'-6"	2'-0"	2'-6"	3'-0"	5'-3"	-	-	1'-0"	1'-0"	1'-6"	2'-0"	2'-6"	3'-11"	-	-	-
		14'	1'-0"	1'-0"	1'-6"	2'-0"	2'-6"	3'-3"	6'-9"	-	-	1'-0"	1'-0"	1'-6"	2'-0"	2'-9"	5'-3"	-	-	-
		16'	1'-0"	1'-0"	1'-6"	2'-0"	2'-6"	4'-6"	-	-	-	1'-0"	1'-0"	1'-6"	2'-0"	3'-11"	6'-10"	-	-	-
		18'	1'-0"	1'-0"	1'-6"	2'-0"	2'-9"	6'-0"	-	-	-	1'-0"	1'-0"	1'-6"	2'-8"	5'-4"	8'-7"	-	-	-
		20'	1'-0"	1'-0"	1'-6"	2'-0"	4'-1"	7'-1"	-	-	-	1'-0"	1'-0"	1'-11"	4'-5"	7'-0"	10'-0"	-	-	-
		22'	1'-0"	1'-0"	1'-6"	2'-10"	5'-7"	8'-4"	-	-	-	1'-0"	1'-0"	3'-3"	5'-5"	8'-10"	-	-	-	-
		24'	1'-0"	1'-0"	1'-6"	3'-8"	6'-8"	9'-9"	-	-	-	1'-0"	2'-4"	4'-9"	7'-2"	10'-2"	-	-	-	-
		26'	1'-0"	1'-0"	2'-8"	4'-8"	7'-11"	11'-2"	-	-	-	1'-2"	3'-2"	5'-10"	8'-5"	11'-8"	-	-	-	-
		28'	1'-0"	1'-0"	3'-7"	6'-5"	9'-3"	12'-9"	-	-	-	2'-0"	4'-10"	7'-8"	10'-6"	13'-4"	-	-	-	-
		30'	1'-0"	2'-4"	4'-7"	7'-7"	10'-7"	14'-5"	-	-	-	3'-8"	5'-11"	9'-0"	12'-0"	15'-0"	-	-	-	-
		32'	1'-0"	3'-3"	5'-8"	8'-11"	12'-1"	15'-4"	-	-	-	4'-9"	7'-2"	10'-5"	13'-7"	-	-	-	-	-
		34'	1'-9"	4'-4"	6'-11"	10'-4"	12'-10"	-	-	-	-	6'-9"	9'-4"	11'-11"	15'-4"	-	-	-	-	-
20	LPI 36A 56A	12'	1'-0"	1'-0"	1'-6"	2'-0"	2'-6"	3'-0"	3'-8"	4'-11"	-	1'-0"	1'-0"	1'-6"	2'-0"	2'-6"	3'-0"	5'-5"	-	-
		14'	1'-0"	1'-0"	1'-6"	2'-0"	2'-6"	3'-0"	5'-0"	6'-1"	-	1'-0"	1'-0"	1'-6"	2'-0"	2'-6"	4'-2"	7'-0"	-	-
		16'	1'-0"	1'-0"	1'-6"	2'-0"	2'-6"	3'-3"	6'-6"	7'-9"	-	1'-0"	1'-0"	1'-6"	2'-0"	3'-2"	5'-7"	-	-	-
		18'	1'-0"	1'-0"	1'-6"	2'-0"	2'-6"	4'-7"	7'-9"	-	-	1'-0"	1'-0"	1'-6"	2'-2"	4'-5"	7'-2"	-	-	-
		20'	1'-0"	1'-0"	1'-6"	2'-0"	3'-1"	6'-1"	9'-2"	-	-	1'-0"	1'-0"	1'-6"	3'-5"	6'-0"	9'-0"	-	-	-
		22'	1'-0"	1'-0"	1'-6"	2'-3"	4'-6"	7'-3"	10'-7"	-	-	1'-0"	1'-0"	2'-8"	4'-11"	7'-8"	10'-6"	-	-	-
		24'	1'-0"	1'-0"	1'-6"	3'-1"	5'-6"	8'-6"	-	-	-	1'-0"	1'-9"	4'-2"	6'-7"	9'-0"	12'-0"	-	-	-
		26'	1'-0"	1'-0"	2'-0"	4'-0"	6'-7"	9'-10"	-	-	-	1'-0"	3'-2"	5'-2"	7'-9"	10'-5"	-	-	-	-
		28'	1'-0"	1'-0"	2'-10"	5'-8"	7'-10"	11'-4"	-	-	-	2'-0"	4'-2"	7'-0"	9'-1"	12'-7"	-	-	-	-
		30'	1'-0"	1'-7"	3'-10"	6'-10"	9'-1"	12'-11"	-	-	-	3'-8"	5'-11"	8'-3"	11'-3"	14'-3"	-	-	-	-
		32'	1'-0"	3'-3"	4'-10"	8'-1"	10'-6"	13'-9"	-	-	-	4'-9"	7'-2"	9'-7"	12'-10"	15'-3"	-	-	-	-
		34'	1'-9"	4'-4"	6'-0"	9'-5"	12'-0"	15'-5"	-	-	-	5'-11"	8'-5"	11'-0"	14'-5"	17'-0"	-	-	-	-
22	LPI 36A 56A	16'	1'-0"	1'-0"	1'-6"	2'-0"	2'-6"	3'-0"	4'-11"	6'-1"	7'-9"	1'-0"	1'-0"	1'-6"	2'-0"	2'-6"	4'-9"	7'-7"	-	-
		18'	1'-0"	1'-0"	1'-6"	2'-0"	2'-6"	3'-8"	6'-5"	7'-9"	-	1'-0"	1'-0"	1'-6"	2'-0"	4'-0"	6'-3"	9'-0"	-	-
		20'	1'-0"	1'-0"	1'-6"	2'-0"	2'-7"	5'-1"	7'-7"	9'-2"	-	1'-0"	1'-0"	1'-6"	2'-11"	5'-6"	8'-0"	-	-	-
		22'	1'-0"	1'-0"	1'-6"	2'-0"	3'-11"	6'-2"	8'-11"	10'-7"	-	1'-0"	1'-0"	2'-1"	4'-4"	6'-7"	9'-4"	-	-	-
		24'	1'-0"	1'-0"	1'-6"	2'-6"	4'-11"	7'-4"	10'-4"	-	-	1'-0"	1'-9"	3'-6"	6'-0"	8'-5"	10'-10"	-	-	-
		26'	1'-0"	1'-0"	1'-6"	4'-0"	5'-11"	8'-7"	11'-10"	-	-	1'-0"	2'-6"	5'-2"	7'-1"	9'-9"	13'-0"	-	-	-
		28'	1'-0"	1'-0"	2'-10"	5'-0"	7'-1"	9'-11"	13'-5"	-	-	2'-0"	4'-2"	6'-3"	9'-1"	11'-2"	-	-	-	-
		30'	1'-0"	1'-7"	3'-10"	6'-1"	8'-4"	11'-4"	14'-5"	-	-	3'-8"	5'-2"	7'-5"	10'-6"	12'-9"	-	-	-	-
		32'	1'-0"	2'-5"	4'-10"	7'-3"	9'-8"	12'-11"	-	-	-	4'-9"	7'-2"	9'-7"	12'-0"	14'-5"	-	-	-	-
		34'	1'-9"	3'-6"	6'-0"	8'-7"	11'-2"	14'-7"	-	-	-	5'-11"	8'-5"	11'-0"	13'-7"	16'-2"	-	-	-	-
		36'	2'-9"	4'-7"	7'-3"	10'-0"	12'-9"	15'-5"	-	-	-	7'-2"	9'-10"	12'-7"	15'-4"	18'-0"	-	-	-	-
		38'	3'-10"	5'-9"	8'-8"	10'-7"	13'-5"	17'-3"	-	-	-	8'-6"	11'-4"	14'-3"	16'-2"	-	-	-	-	-
24	LPI 36A 56A	16'	1'-0"	1'-0"	1'-6"	2'-0"	2'-6"	3'-0"	4'-1"	5'-4"	6'-6"	1'-0"	1'-0"	1'-6"	2'-0"	2'-6"	3'-11"	6'-5"	7'-7"	-
		18'	1'-0"	1'-0"	1'-6"	2'-0"	2'-6"	3'-3"	5'-6"	6'-5"	7'-9"	1'-0"	1'-0"	1'-6"	2'-0"	3'-1"	5'-4"	8'-1"	-	-
		20'	1'-0"	1'-0"	1'-6"	2'-0"	2'-6"	4'-1"	6'-7"	8'-1"	9'-2"	1'-0"	1'-0"	1'-6"	2'-5"	5'-0"	7'-0"	9'-6"	-	-
		22'	1'-0"	1'-0"	1'-6"	2'-0"	3'-4"	5'-7"	7'-10"	9'-6"	10'-7"	1'-0"	1'-0"	2'-1"	3'-9"	6'-0"	8'-10"	-	-	-
		24'	1'-0"	1'-0"	1'-6"	2'-0"	4'-3"	6'-8"	9'-1"	10'-11"	-	1'-0"	1'-1"	3'-6"	5'-4"	7'-9"	10'-2"	-	-	-
		26'	1'-0"	1'-0"	1'-6"	3'-4"	5'-3"	7'-11"	10'-6"	11'-10"	-	1'-0"	2'-6"	4'-6"	7'-1"	9'-1"	11'-8"	-	-	-
		28'	1'-0"	1'-0"	2'-2"	4'-3"	6'-5"	9'-3"	12'-0"	13'-5"	-	2'-0"	4'-2"	6'-3"	8'-4"	10'-6"	13'-4"	-	-	-
		30'	1'-0"	1'-7"	3'-1"	5'-4"	7'-7"	10'-7"	13'-8"	-	-	2'-11"	5'-2"	7'-5"	9'-9"	12'-0"	15'-0"	-	-	-
		32'	1'-0"	2'-5"	4'-10"	6'-6"	8'-11"	12'-1"	15'-4"	-	-	4'-9"	6'-4"	8'-9"	11'-2"	13'-7"	-	-	-	-
		34'	1'-9"	3'-6"	6'-0"	7'-9"	10'-4"	12'-10"	16'-3"	-	-	5'-11"	8'-5"	10'-2"	12'-9"	15'-4"	-	-	-	-
		36'	2'-9"	4'-7"	6'-5"	9'-1"	11'-10"	14'-6"	-	-	-	7'-2"	9'-10"	11'-8"	14'-5"	17'-1"	-	-	-	-
		38'	3'-10"	5'-9"	7'-8"	10'-7"	13'-5"	16'-3"	-	-	-	8'-6"	11'-4"	13'-3"	16'-2"	19'-0"	-	-	-	-

Figure 3. Web Hole Drawing for TLI Joists

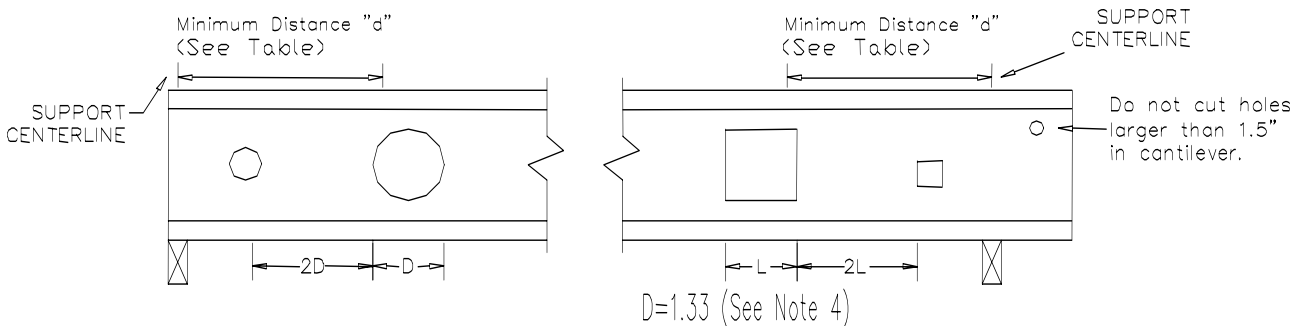

Table 11. Web Hole Chart for TLI 15, 25, 35, and CTR Joists

JOIST DEPTH (in)	CIRCULAR HOLE DIAMETER "D" (in)								
	Col. 1	**Col. 2**	**Col. 3**	**Col. 4**	**Col. 5**	**Col. 6**	**Col. 7**	**Col. 8**	**Col. 9**
9.5	--	2	--	3	--	4	--	5	6
11.875	--	2	3	--	4	5	6	--	8
14	2	3	4	5	6	7	8	9	10
16	2	3	5	6	7	9	10	11	--
SPAN (ft)	**MINIMUM DISTANCE "d" FROM SUPPORT CENTERLINE (ft-in)**								
10	1-0	1-3	1-3	1-9	1-9	2-3	2-6	2-9	3-3
12	1-0	1-3	1-6	2-0	2-0	2-9	3-0	3-6	4-0
14	1-0	1-3	1-9	2-3	2-6	3-0	3-6	4-0	4-9
16	1-0	1-6	2-0	2-6	2-9	3-6	4-0	4-6	5-3
18	1-3	1-8	2-3	2-9	3-0	4-0	4-6	5-0	6-0
20	1-3	2-0	2-6	3-3	3-6	4-6	5-0	5-6	6-6
22	1-6	2-3	2-9	3-6	3-9	4-9	5-6	6-0	7-3
24	1-6	2-6	3-0	3-9	4-0	5-3	6-0	6-9	8-0
26	1-9	2-9	3-3	4-0	4-6	5-9	6-6	7-3	8-6
28	1-9	3-0	3-5	4-3	4-9	6-0	7-0	7-9	9-3
30	2-0	3-3	3-9	4-9	5-0	6-5	7-6	8-3	9-9

For **SI:** 1 inch = 25.4 mm, 1 foot = 304.8 mm.

NOTES:

1. **DO NOT CUT OR DAMAGE FLANGES.**
2. A 1.5" hole may be cut anywhere in the web.
3. The uncut distance between holes shall be at least twice the diameter of the largest hole or twice the longest side of a rectangular hole.
4. For square or rectangular holes, the longest side "L" is multiplied by 1.33 to obtain the value as "D" in the table.
5. Table is for simple or multiple span conditions with uniform loads.
6. To determine minimum distance "d" from center line of support to centerline of hole:

   a. Select appropriate column for desired joist depth and size.
   b. Follow column down to the intersection of the appropriate span, the value in this cell is "d".

   Example 1: To cut a 4" circular hole in a 11.875" deep joist with a 16 foot span:
   1. Select Column 5.
   2. Follow column down to 16 foot span.
   3. Centerline of hole shall be 2'-9" from centerline of support.

   Example 2: To cut a 3" square hole in a 11.875" deep joist with a 16 foot span:
   1. 3" x 1.33 = 3.99", use 4".
   2. Select Column 5.
   3. Follow column down to 16 foot span.
   4. Center line of hole shall be 2'-9" from center line of support.

Table 12. Maximum Rectangular Hole Length for TLI 16 and 21 Joists

JOIST SERIES	JOIST DEPTH (in.)	PERCENTAGE WEB DEPTH REMOVED			
		25%	50%	75%	100%
TLI 16	9.5	24	24	21.5	17.75
	11.25	24	24	22.25	18.5
	11.875	24	24	22.5	18.75
	14	24	24	23.25	19.375
	16	24	24	23.375	19.75
TLI 21	9.5	24	24	21.5	17.75
	11.25	24	24	22.875	19.125
	11.875	24	24	23.125	19.25
	14	24	24	24	20.5
	16	24	24	24	21.25

Table 13. Maximum Allowable Round Hole Diameter for TLI 16 and 21 Joists

JOIST SERIES	JOIST DEPTH (in.)				
	9.5	11.25	11.875	14	16
	MINIMUM ALLOWABLE ROUND HOLE DIAMETER (in.)				
TLI 16	6.5	8.25	8.875	11	13
TLI 21	6.5	8.25	8.875	11	13

Table 14. Web Hole Equations for TLI 16 and 21 Joists

HOLE TYPE	FORMULA
RECTANGULAR	Y = 0.389 + (0.002 x X1) + (0.198 x X2) + (0.013 x X3)
ROUND	Y = -0.293 + (0.0178 x X1) + (0.715 x X2)

Where:
Y = Factor noting decrease in shear strength.
X1 = Joist Depth (Inches).
X2 = Percentage Web Depth Removed (Decimal Fraction).
X3 = Hole Length (Inches).

When using the formulas in Table 14, the hole is too large if the resulting shear capacity of the I-joist is less than 200 lbs.

Example using formulas in Table 14:

Given: I-joist is Series 16, 9.5", Hole length = 18 inches, Hole depth is equal to 50% of I-joist depth, Shear capacity of joist without hole = 1225 lbs. Find the shear capacity of this joist:

Y = 0.389 + (0.002 x 9.5) + (0.198 x 0.5) + (0.013 x 18)
Y = 0.741 decrease in shear capacity

Shear capacity with hole = (1 – 0.741) x 1225 = 317 lbs. Place in a location in span where the shear level does not exceed 317 lbs.

NOTES FOR TABLES 12 TO 14:
1. Holes must be centered within the depth of the joists.
2. The maximum length for any rectangular hole shall not exceed 24".
3. 100% depth removed assumes that the hole is centered in the depth of the joist, and at least ¼" of web is left on both the top and bottom of the hole.
4. Distance from center bearing to rectangular hole edge adjacent to support shall be no less than 18 inches (457 mm). Distance from center bearing to center of circular hole shall be no less than 12" (305 mm).
5. Spacing between holes shall be not less than twice the diameter of the larger circular hole, or twice the length of the larger rectangular hole.

Figure 4. Typical I-Joist Floor Layout

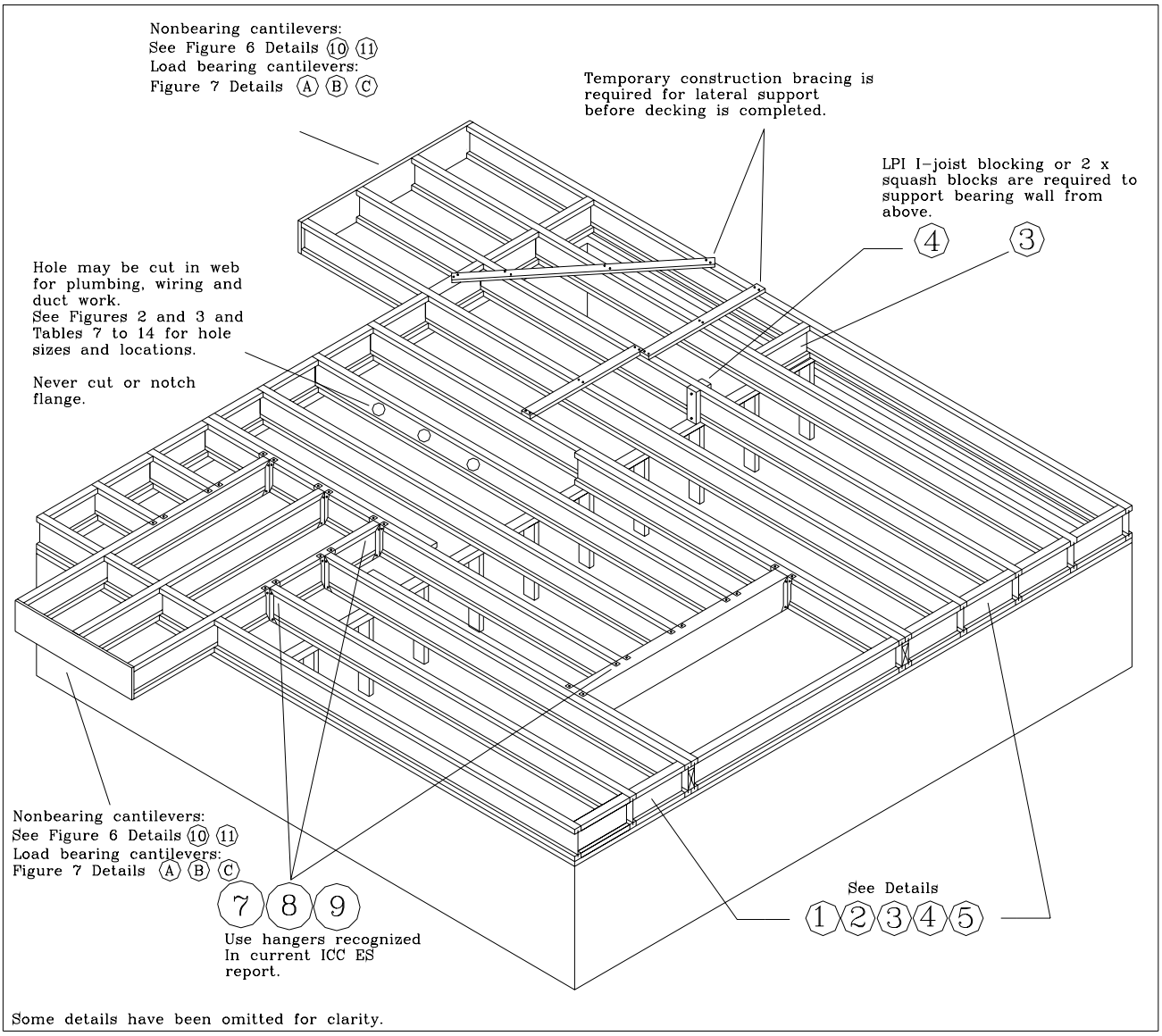

NOTES:

1. These instructions are offered as a guide to good practice in the handling, storage and installation of LPI joists. They are, however, solely general recommendations, and, in some instances, other or additional precautions may be desirable. In all cases, the procedures used shall be as specified by the architect/engineer responsible for the entire building and approved by the building official.
2. Failure to follow good procedures for handling, storage and installation could result in unsatisfactory performance, unsafe structures and possible collapse.
3. All rim joists, blocking, connections and temporary bracing must be installed before erectors are allowed on the structure.
4. No loads other than the weight of the erectors are to be imposed on the structure before it is permanently sheathed.
5. After sheathing, do not overload joists with construction materials exceeding design loads.
6. **TEMPORARY BRACING:** Use lines of 1-by-4's nailed at each LPI joist with two 8d nails. Keep them parallel and approximately 8 feet-0 inches apart. Use long pieces, not short blocks. Lap the ends (side by side) to keep the line continuous. To prevent endwise intervals between ends. The continuous 1-by-4 bracing shall be attached to the braced bay.
7. Numbered details are noted in Figures 5 and 6.
8. For **SI**: 1 inch = 25.4 mm, 1 foot = 304.8 mm.

Figure 5. I-Joist Floor Framing Details

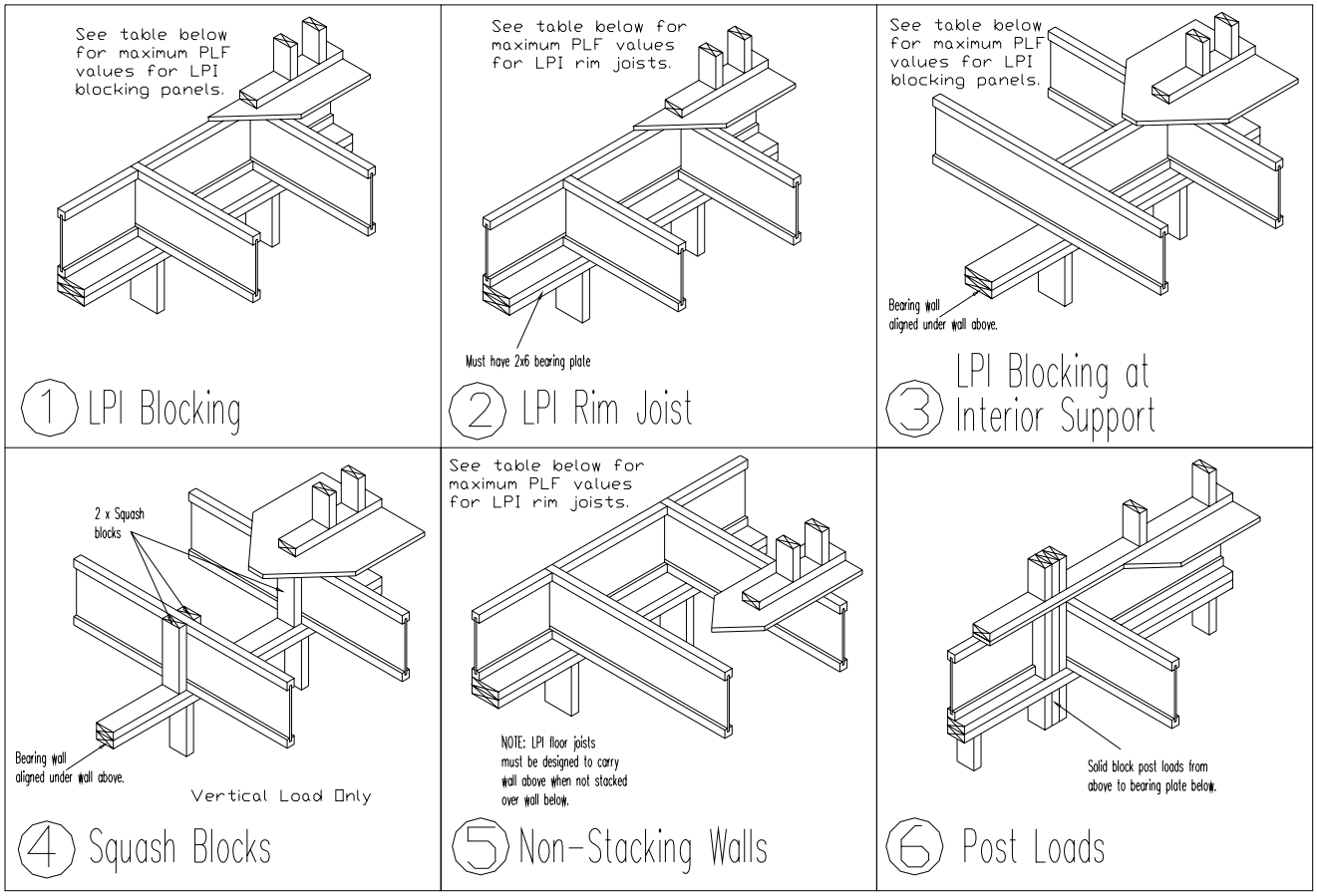

NOTES:

1. Minimum bearing is required at joist ends, as specified in Tables 1 and 4. Minimum 3 ½ inches bearing is required at interior supports.
2. Top and bottom flanges must be laterally restrained at all supports.
3. Lateral support should be considered for bottom flange where there is no sheathing on underside.
4. *All* installation details apply to LPI Series joists.
5. Squash block-bearing capacity designed by a professional engineer.
6. These details apply to gravity loads. Applicability to lateral force resistance is beyond the scope of this report.
7. For **SI** Units: 1 inch = 25.4 mm, 1 foot = 304.8 mm, 1 plf = 14.6 N/m.

Table 15. LPI Rim Joist or Blocking Panel Allowable Capacities

Joist Depth (in.)	LPI Joist Series							
	100-150	**200-250**	**300-350**	**550**	**26/26A**	**30/30A**	**36/36A**	**56A**
9.500	1800 plf	1800 plf	1800 plf	-	1800 plf	1800 plf	-	-
11.875	1800 plf	1800 plf	1800 plf	2400 plf	1800 plf	1800 plf	1800 plf	2400 plf
14.000	-	1800 plf	1800 plf	2200 plf	-	1800 plf	1800 plf	2200 plf
16.000	-	1800 plf	1800 plf	1900 plf	-	1800 plf	1800 plf	1900 plf
18.000	-	-	-	-	-	-	1300 plf	1700 plf
20.000	-	-	-	-	-	-	1300 plf	1580 plf
22.000	-	-	-	-	-	-	1200 plf	1300 plf
24.000	-	-	-	-	-	-	1100 plf	1100 plf

For **SI** Units: 1 inch = 25.4 mm, 1 plf = 14.6 N/m.

Figure 6. I-Joist Floor Framing Details (Cont'd)

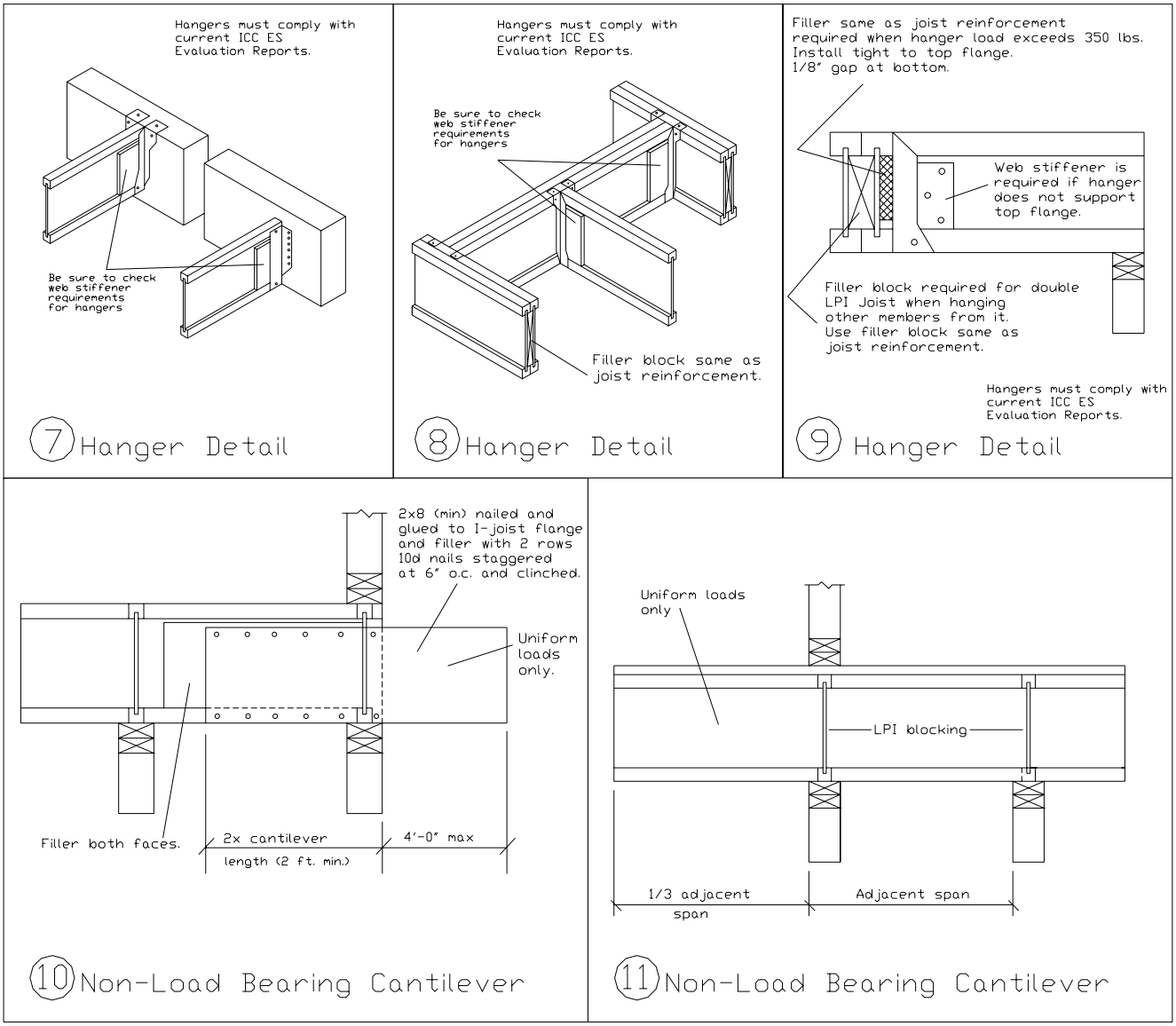

NOTES:

1. Live load applied to cantilever should not be greater than three times the dead load applied to the adjacent span.
2. LPI Joists may be cantilevered up to one third of the adjacent span if they do not support concentrated loads on the cantilever.
3. For **SI** Units: 1 inch = 25.4 mm, 1 foot = 304.8 mm, 1 pound = 4.45 N.

FILLER BLOCKS:

Use 1/2-inch and 5/8-inch OSB (or equal) with LPI 100, 125, 150 and 26 Series Joists, 2-by-6 lumber (minimum SPF) with LPI 200, 225, 250 and 30 Series Joists, and 2-by-8 lumber (minimum SPF) + 1/2-inch OSB (or equal) with LPI 300, 325, 350 and 36 Series Joists. Attach with two rows of 8d nails staggered at 6 inches on center from each side. Use two 2-by-8's (minimum SPF) with LPI 550 and 56A Series Joists. Attach with two rows of 10d nails staggered at 6 inches on center from each side.

FILLERS:

Use 1/2-inch or 5/8-inch OSB (or equal) with LPI 100, 125, 150 and 26 Series Joists, 3/4-inch OSB (or equal) with LPI 200, 225, 250 and 30 Series Joists, and 2 pieces of 1/2-inch OSB (or equal) with LPI 300, 325, 350 and 36 Series Joists. Attach with two rows of 8d nails staggered at 6 inches on center from each side. Use 2-by-8's (minimum SPF) with LPI 550 and 56A Series Joists. Attach with two rows of 10d nails staggered at 6 inches on center from each side.

Figure 7. I-Joist Load-Bearing Cantilever Details

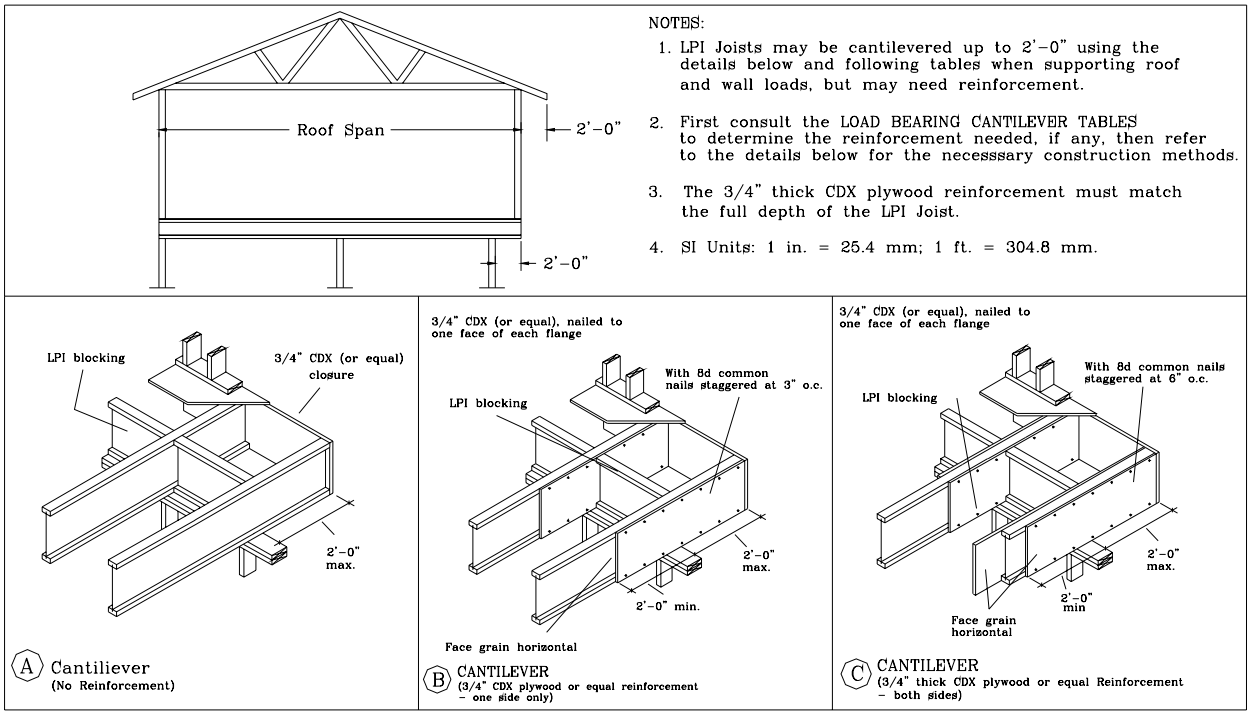

Figure 8. Typical Roof Layout

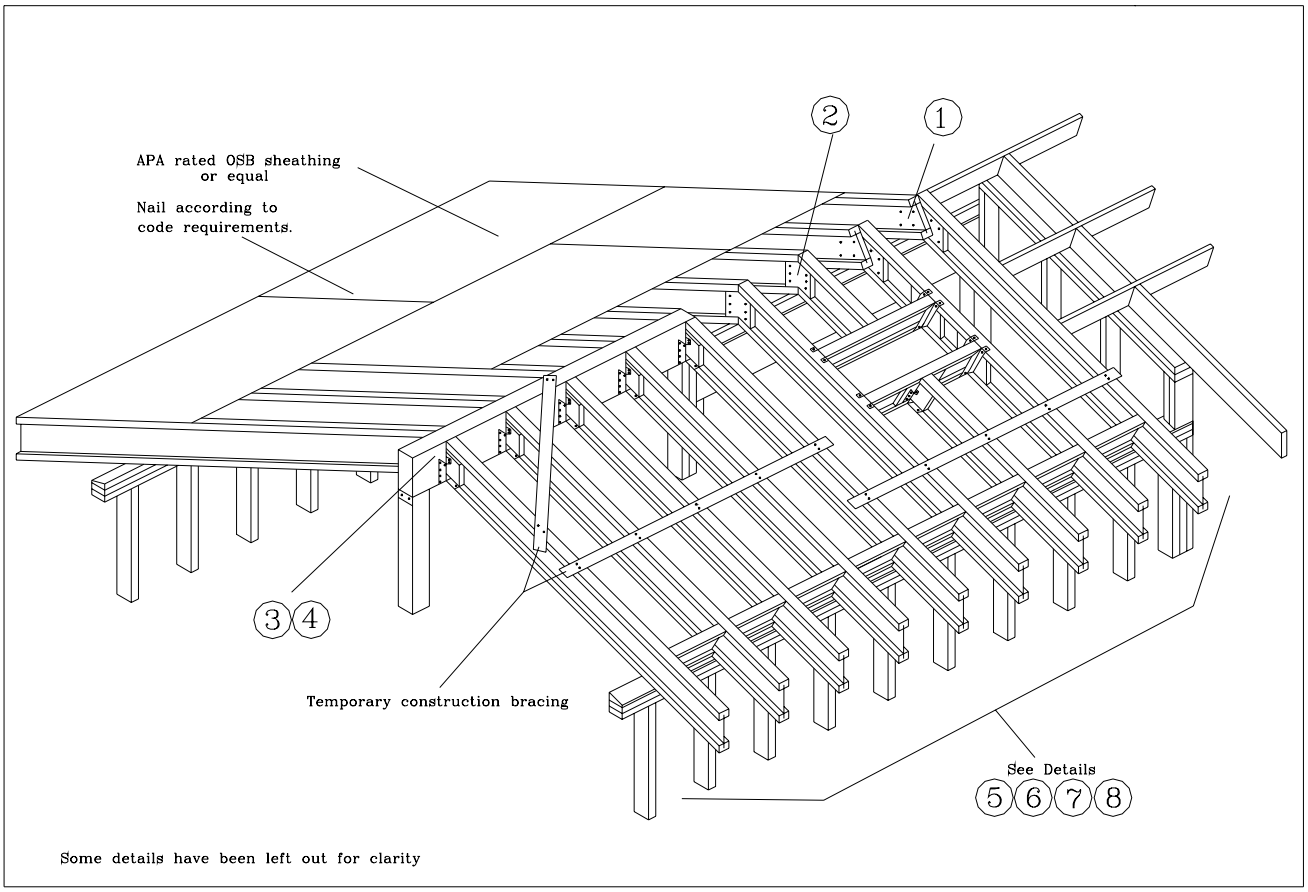

NOTES:

1. These instructions are offered as a guide to good practice in the handling, storage and installation of LPI joists. They are, however, solely general recommendations, and, in some instances, other or additional precautions may be desirable. In all cases, the procedures used shall be as specified by the architect/engineer responsible for the entire building and approved by the building official.
2. Failure to follow good procedures for handling, storage and installation could result in unsatisfactory performance, unsafe structures and possible collapse.
3. All rim joists, blocking, connections and temporary bracing must be installed before erectors are allowed on the structure.
4. No loads other than the weight of the erectors are to be imposed on the structure before it is permanently sheathed.
5. After sheathing, do not overload joists with construction materials exceeding design loads.
6. **TEMPORARY BRACING:** Use lines of 1-by-4's nailed at each LPI joist with two 8d nails. Keep them parallel and approximately 8 feet-0 inches apart. Use long pieces, not short blocks. Lap the ends (side by side) to keep the line continuous. To prevent endwise intervals between ends. The continuous 1-by-4 bracing shall be attached to the braced bay.
7. Numbered details are noted in Figure 9
8. For **SI** Units: 1 inch = 25.4 mm, 1 foot = 304.8 mm.

Figure 9. Roof Framing Details

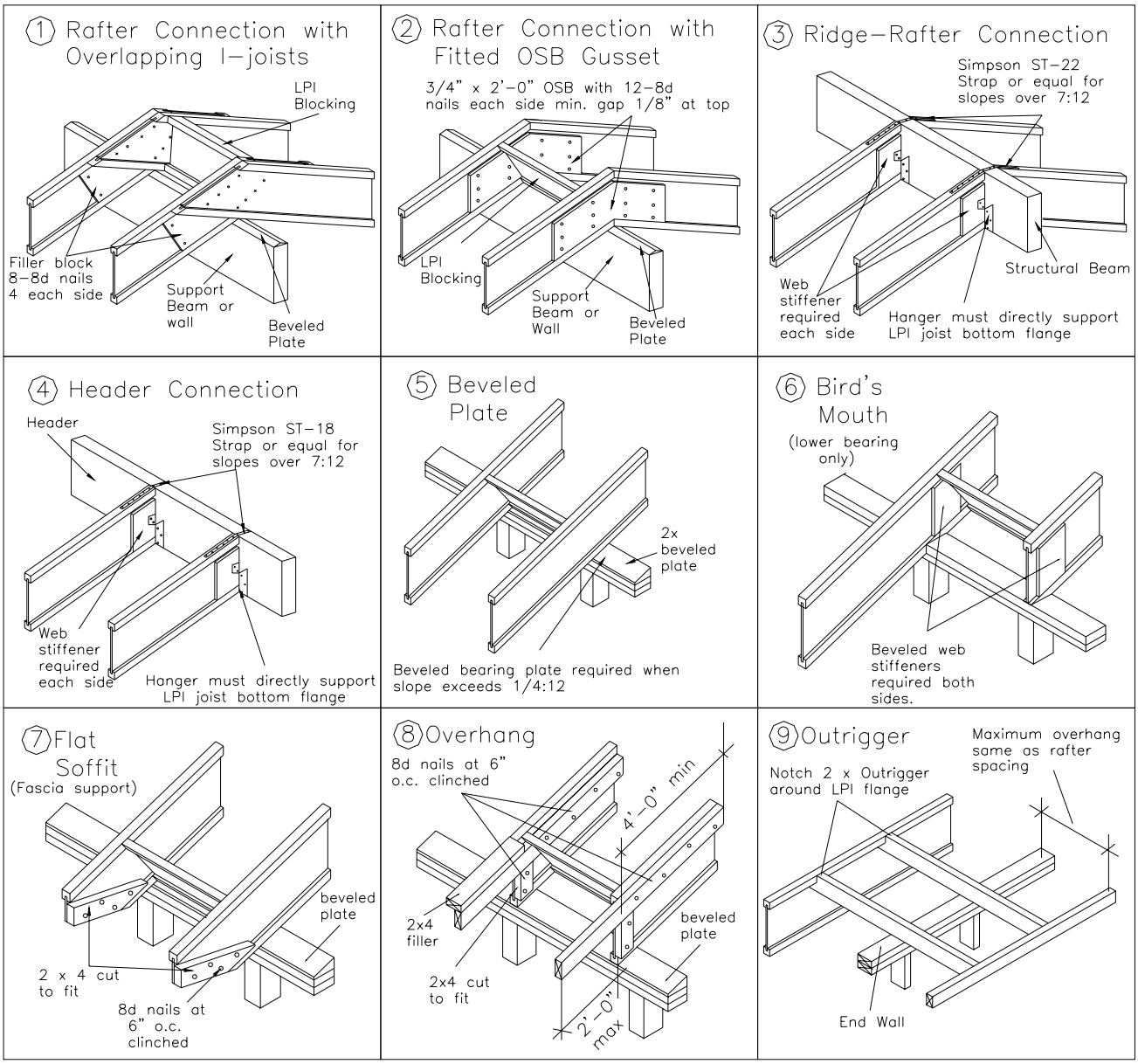

NOTES:

1. LPI joist flanges may have a bird-mouth cut only at the low end of the I-joist. The bird-mouth cut must not overhang the inside face of bearing plate. The I-joist must bear fully on the plate.
2. All end bearings must be laterally supported. LPI joist blocking is recommended.
3. All details are valid to a maximum 12:12 slope unless otherwise noted.
4. For stiffener requirements, refer to Table 5 and Figure 1.
5. The capacity of straps and hangers to resist loads is designed by the structural designer.
6. For **SI** Units: 1 inch = 25.4 mm, 1 foot = 304.8 mm.

Figure 10. One-Hour Floor-Ceiling Fire-Resistive Assembly

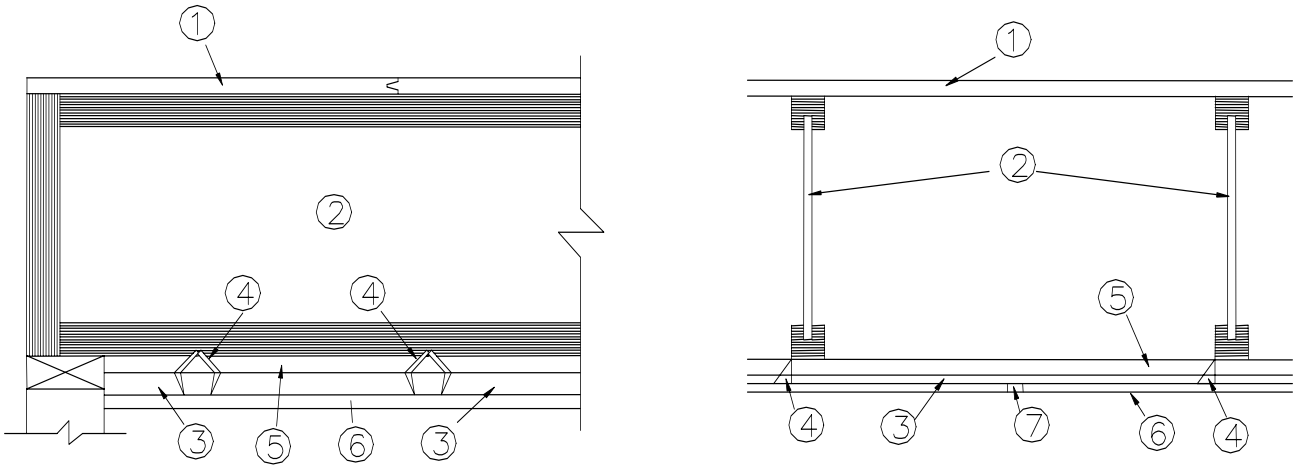

1. Floor Sheathing	23/32-in. thick 4-ft by 8- ft tongue and groove (APA-rated Sturdi-I-Floor) sheets installed perpendicular to I-joists and fastened with an AFG-01 construction adhesive and 6d deformed shank or 8d common nails, 12 in. on center at all locations.
2. Wood I-joists	Wood I-joists shall be a minimum of 11-1/4-in. deep with flange dimensions at least 1-1/2-inches x 1-1/2-inches of LVL and a minimum of 3/8-inch thick OSB web as manufactured by the Louisiana-Pacific Corporation. Joists are spaced at a maximum of 24-in. on center and fastened to 2x6 bearing plates with 8d common nails through flanges on each side of web. Rim joists at ends of joists were 1-1/2 x 11-1/4-in. LVL.
3. Furring Channels	Resilient furring channels measuring 2.636 inches wide by 0.838 inches deep formed from No. 26 gauge (0.0719 inch) galvanized steel sheet spaced 24-in. on center perpendicular to the joists. Supported by Simpson CSC clips (4). At splices, channels overlapped 6 in., and tied with two double strands of No. 18 SWG galvanized steel wire at each end of overlap. At wallboard end joints, a second length of channel is installed adjacent to the first to provide one channel for each wallboard end. Second channel span from joist to joist outside the wallboard width to support the entire end of the wallboard.
4. Hanger Clips	Simpson Type CSC hangers for furring channels. One at each intersection of joist and channel nailed with one 6d or 8d common nail.
5. Insulation	1-in. thick 24x48-in. mineral wood batts with nine pounds per cubic foot density.
6. Gypsum Wallboard	5/8-in. thick US Gypsum Company Firecode C in 4-ft. wide sheets installed perpendicular to furring channels with 1-in. long Type S wallboard screws on 8-in. centers. End joints attached to the doubled channels, long joints backed by sheet metal Tee-Sections (7). Edges of wallboard attached to Tee-Sections by 1-in. Type S wallboard screws 8-in. on center with one screw at each Tee-Section-channel intersection.
7. Tee-Section	Formed from No. 20 gauge (0.0359 inch) galvanized steel sheet. Sections are 1 7/8-in. wide overall with the short leg ½-in. long overall.
8. Finish System	(Not Shown) Paper tape embedded in joint compound over joints with edges of compound feathered out and exposed screw heads covered with compound.

Figure 11. One-Hour Floor-Ceiling Fire-Resistive Assembly

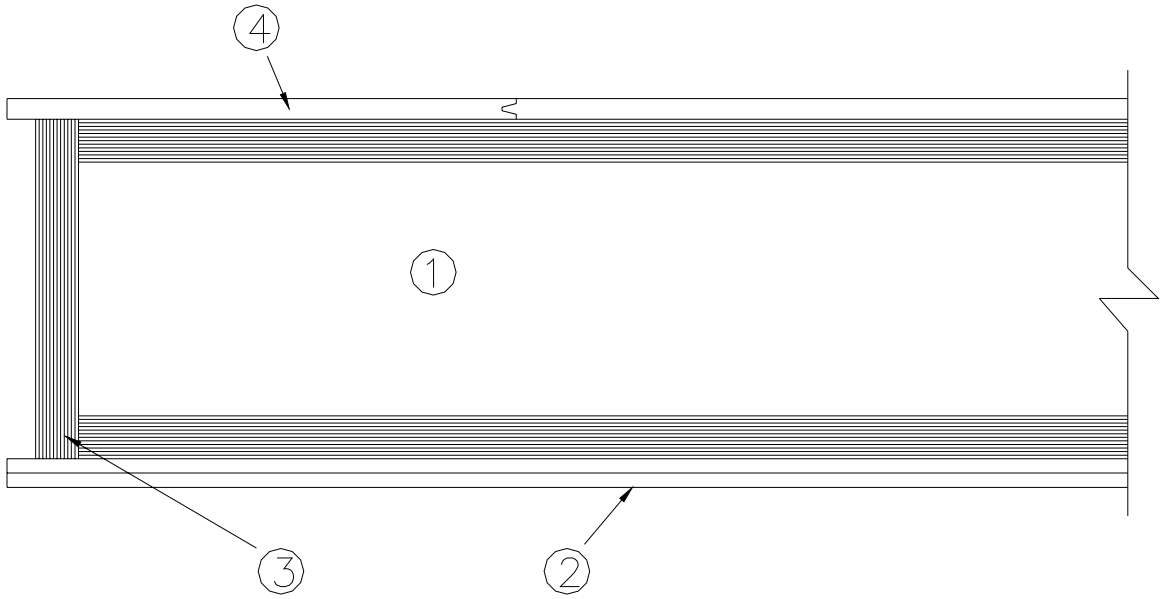

1. Wood I-joists Wood I-joists shall be a minimum of 11-1/4-in. deep with flange dimensions at least 1-1/2-inches x 1-1/2-inches of LVL and minimum of 3/8-inch thick OSB web as manufactured by the Louisiana-Pacific Corporation. Wood I-joists are spaced at a maximum of 24 inches on center and fastened to minimum 2x6 bearing plates with 8d common nails.

2. Gypsum Wallboard 2 layers of ½-in. thick Type FSW-G gypsum wallboard in 4-ft. wide sheets, manufactured by National Gypsum, are directly attached to the bottom flanges of the joists. The long dimension of the wallboard is oriented perpendicular to the joists. The first layer is fastened to the joists with 1-1/4-in. Type S drywall screws spaced 24 inches on center, butt joints being staggered 25 inches from the adjacent rows of the face layer. The second layer is fastened to the joists with 1-3/8-in. Type S drywall screws spaced 12 inches on center with its joints being staggered 24 inches in each direction from joints of the first layer.

3. End blocking I-joist sections equal in length to the joist spacing minus their flange width are installed between the joists and toe-nailed to adjacent joists with 8d common nails.

4. Floor Sheathing 19/32-in. thick tongue-and-groove in 4-ft x 8-ft sheets installed with long edge perpendicular to the joists and fastened with 8d common or 6d shank nails at 6 inches on center at all locations. End joints are staggered 24 inches from adjacent rows.

5. Finish System (Not Shown) Exposed wallboard joints are treated with paper tape embedded in joint compound and covered with two coats of compound. Screw heads are covered with two coats of joint compound.

Figure 12. Two-Hour Floor-Ceiling Fire Resistive Assembly

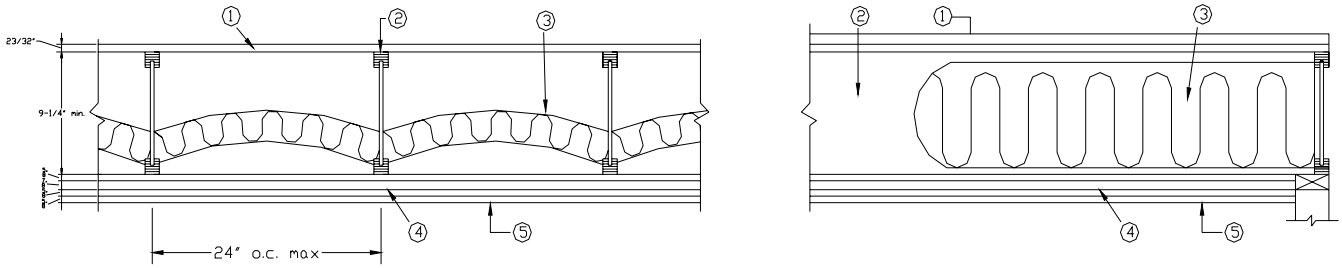

1. Floor Sheathing Panels shall conform to the requirements of PS 1-83, Exposure 1, interior type with exterior glue, minimum 23/32-inch thick, tongue-and-groove long edges for floors and a minimum 15/32-inch thick square edges for roofs. Install long edges perpendicular to the I-joists. Stagger end joints on I-joists. For floors, apply AFG-01 construction adhesive in a 3/8-inch bead on the top surface of the I-joists, and grooved edges of the sheathing. Nail with 6d deformed shank nails, 8d common nails, or equivalent-sized screws 6 inches on center on the panel ends, and 12 inches on center in the field. Optionally, with minimum ¾-inch thick light-weight concrete of floor topping mixture, panels shall be minimum 19/32-inch thick.

2. Wood I-joists Wood I-joists shall be minimum 9-1/4-inch deep with flange dimensions of at least 1-1/2 x 1-1/2-inches of LVL and minimum 3/8-inch thick OSB webs as manufactured by the Louisiana-Pacific Corporation. Maximum spacing is 24 inches on center. Holes in the webs per manufacturers' instructions are permitted.

3. Insulation Unfaced fiberglass batts 24 inches wide by 48 inches long by 3-1/2-inches thick with 3.5 pcf density placed in the plenum and supported by stay wires spaced about 12 inches apart.

4. Furring channels Resilient furring channels formed from No. 28 gauge (0.0179 inch) galvanized sheet steel measuring 2.636 inches wide by 0.838 inches deep spaced 16 inches on center perpendicular to the joists and attached to the joist by 1-5/8-inch Type S wallboard screws.

5. Gypsum Wallboard Wallboard is 5/8-inch thick US Gypsum Firecode C, Celotex Fi-Rok Plus, Georgia-Pacific Fire Stop C, or Gold Bond Fire-Shield FSW-G. Install the base layer perpendicular to the joists with the ends staggered at the joists with 1-5/8-inch long Type S wallboard screws at 12 inches on center. Furring channels are installed as described above between the base and intermediate layers. The intermediate layer is attached perpendicular to the channels with the ends staggered at the channels with one-inch long Type S wallboard screws at 12 inches on center. The finish layer is attached to the channels with 1-5/8-inch long Type S wallboard screws spaced 8 inches on center. The ends of the finish layer are staggered at the channels with respect to each other and with respect to the intermediate layer end joints. Long joints of the finish layer are staggered with respect to the long joints of the intermediate layer.

6. Finish System (Not Shown) On finish layer only. Paper tape embedded in joint compound over joints with compound edges feathered out and exposed screw heads covered with compound. As an alternative, nominal 23/32-inch-thick veneer plaster may be applied over the entire surface of the wallboard.