Wisconsin
Department of Commerce

Wisconsin Commercial Building Code

Structural -- Chapters 16 through 18

Larry Swaziek

Program Manager, Structural Systems

608/267-7701 *voice*

608/264-8795 *fax*

lswaziek@commerce.state.wi.us *e-mail*

Wisconsin Commercial Building Code (WCBC)
&
The 2000/2006 International Building Code (IBC)

STRUCTURALLY RELATED

IBC CHAPTERS

"CORE" CHAPTERS

16 – STRUCTURAL DESIGN REQUIREMENTS

17 – STRUCTURAL TESTS AND SPECIAL INSPECTIONS

18 – SOILS AND FOUNDATIONS

19 – CONCRETE

20 – ALUMINUM

21 – MASONRY

22 – STEEL

23 – WOOD

24 – GLASS AND GLAZING

25 – GYPSUM BOARD LATH AND PLASTER

ANCILLARY CHAPTERS

14 – EXTERIOR WALLS

15 – ROOF ASSEMBLIES AND ROOFTOP STRUCTURES

26 -- PLASTIC

31 – SPECIAL CONSTRUCTION

Membrane, temporary and pedestrian access structures, awnings and canopies, marquees, signs, radio and television towers, and swimming pool enclosures

35 – REFERENCED STANDARDS

•STRUCTURAL DESIGN REQUIREMENTS

- **Construction Documents** *(IBC Section 1603)*
  - Documents must show size, section and location of structural members and must be dimensioned. Design loads and other pertinent information must be clearly indicated on the documents.
    - *Wisconsinism" (Comm 62.1603)*

      Posting of floor live load in commercial and industrial buildings when design load exceeds 100 psf.

•General Design Requirements (IBC Section 1604)

- General – Design Methods (IBC 1604.1)
  - Strength Design
  - Load and Resistance Factor Design [LRFD]
  - Allowable Stress Design [ASD]
  - Empirical Design
  - Conventional Construction

IBC Chapter 16

•General Design Requirements (cont'd)

➢Deflection (IBC 1604.3)

TABLE 1604.3
DEFLECTION LIMITS[a, b, c]

CONSTRUCTION	L	S or W[f]	D + L[d,g]
Roof members:[e]			
Supporting plaster ceiling	$l/360$	$l/360$	$l/240$
Supporting nonplaster ceiling	$l/240$	$l/240$	$l/180$
Not supporting ceiling	$l/180$	$l/180$	$l/120$
Floor members	$l/360$	—	$l/240$
Exterior walls and interior partitions:			
With brittle finishes	—	$l/240$	—
With flexible finishes	—	$l/120$	—
Farm buildings	—	—	$l/180$
Green houses	—	—	$l/120$

•General Design Requirements (cont'd)

2000 IBC

- Importance Factors (IBC 1604.5)

Snow, Wind, Seismic

2006 IBC

- Occupancy Categories (IBC 1604.5)

Importance factors may be found in snow, wind and seismic design sections.

•General Design Requirements (cont'd)

- Anchorage (IBC 1604.8)
  - General
  - Concrete and masonry walls
    - Resist horizontal forces specified in this chapter but not less than a minimum horizontal force of 200 pounds per linear foot of wall (Increased to 280 plf in 2006 IBC)
    - Walls shall be designed to resist bending between anchors where the anchor spacing exceeds 4 feet
  - Decks

IBC Chapter 16

- **Load Combinations** (IBC Section 1605)
  - **Basic for Strength or LFRD Design**

$1.4(D + F)$ **(Formula 16-1)**

$1.2(D + F + T) + 1.6(L + H) + 0.5(L_r \text{ or } S \text{ or } R)$ **(Formula 16-2)**

$1.2D + 1.6(L_r \text{ or } S \text{ or } R) + (f_{1L} \text{ or } 0.8W)$ **(Formula 16-3)**

$1.2D + 1.6W + f_{1L} + 0.5(L_r \text{ or } S \text{ or } R)$ **(Formula 16-4)**

$1.2D + 1.0E + f_{1L} + f_{2S}$ **(Formula 16-5)**

$0.9D + (1.0E \text{ or } 1.6W)$ **(Formula 16-6)**

$0.9D + 1.0E + 1.6H$ **(Formula 16-7)**

IBC Chapter 16

- **Load Combinations** (Cont'd)

  - **Basic for ASD**

$D + F$	**(Formula 16-8)**
$D + H + F + L + T$	**(Formula 16-9)**
$D + H + F + (L_r \text{ or } S \text{ or } R)$	**(Formula 16-10)**
$D + H + 0.75(L + T) + 0.75(L_r \text{ or } S \text{ or } R)$	**(Formula 16-11)**
$D + H + F + (W \text{ or } 0.7E)$	**(Formula 16-12)**
$D + H + F + 0.75(W \text{ or } 0.7E) + 0.75L + 0.75(L_r \text{ or } S \text{ or } R)$	**(Formula 16-13)**
$0.6D + W + H$	**(Formula 16-14)**
$0.6D + 0.7E + H$	**(Formula 16-15)**

IBC Chapter 16

- **Load Combinations** (Cont'd)
  - **Alternate Basic**
  - **Special Seismic**

IBC Chapter 16

- **Dead Loads, D (IBC Section 1606)**

Note: Do not have the "Wisconsin minimum" service load of 3 PSF.

IBC Chapter 16

- **Live Loads, L (IBC Section 1607)**
  - Uniform
  - Concentrated
  - Partition
  - Trucks and bus garage
  - Handrails, guardrails, etc.
  - Impact
  - Reduction in live loads

Concentrated loads (IBC 1607.4)

- Floors and other similar surfaces shall be designed to support the uniformly distributed live loads prescribed in Section 1607.2 or the concentrated load, in pounds, given in Table 1607.1, whichever produces the greater load effects.

- Unless otherwise specified, the indicated concentration shall be assumed to be uniformly distributed over an area 2.5 feet square [6.25 ft^2] and shall be located so as to produce the maximum load effects in the structural members.

Concentrated loads (IBC 1607.4) - Distribution Example

Uniform Load

Concentrated Load
- most critical location

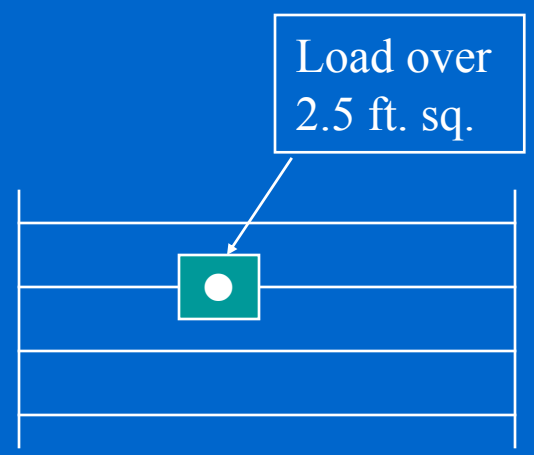

Partition loads (1607.5)

- In office buildings and in other buildings where partition locations are subject to change, provision for partition weight shall be made, whether or not partitions are shown on the construction documents, unless the specified live load exceeds 80 pounds per square foot.

- Such partition load shall not be less than a uniformly distributed live load of 20 pounds per square foot.
  - (Reduced to 15 psf in 2006 IBC.)

IBC Chapter 16

- Reduction in live loads (IBC 1607.9)

  - **Standard**

  - **Alternate**

•Reduction in live loads (IBC 1607.9) (Cont'd)

- **Standard**

General. Subject to the limitations of Section 1607.9.1.1 through 1607.9.1.4, members for which a value of $K_{LL}A_T$ is 400 square feet (37.16 m^2) or more are permitted to be designed for a reduced live load in accordance with the following equation:

EXAMPLE 5. CALCULATION OF LIVE LOAD REDUCTION

The computation of live load reduction for roof and floor per Sections 1607.9 and 1607.11 is illustrated in the following example.

Given: Plan dimensions: (as shown)
Story height = 12 ft

Live load:	Floors	=	50 psf (for a typical office building, see Table 1607.1)
	Roof	=	20 psf (assumed)
Dead load:	Floors	=	120 psf (assumed)
	Roof	=	90 psf (assumed)

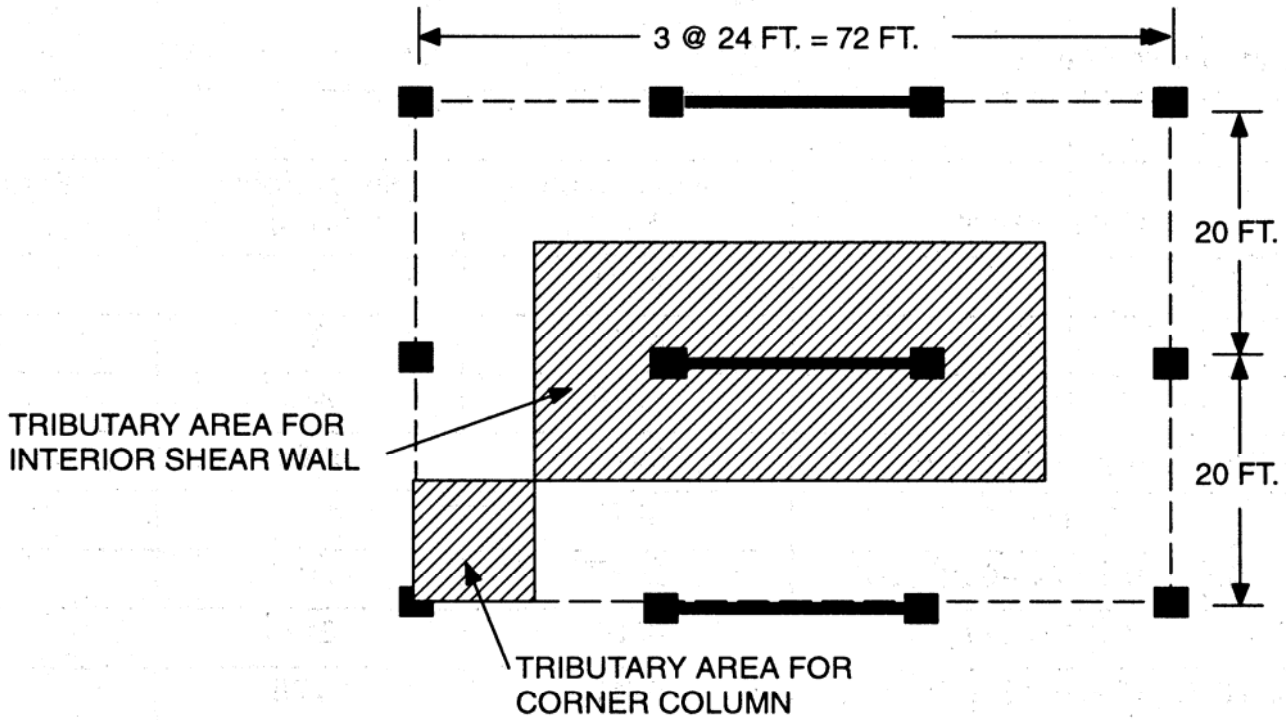

PLAN

EXAMPLE 5—(continued)

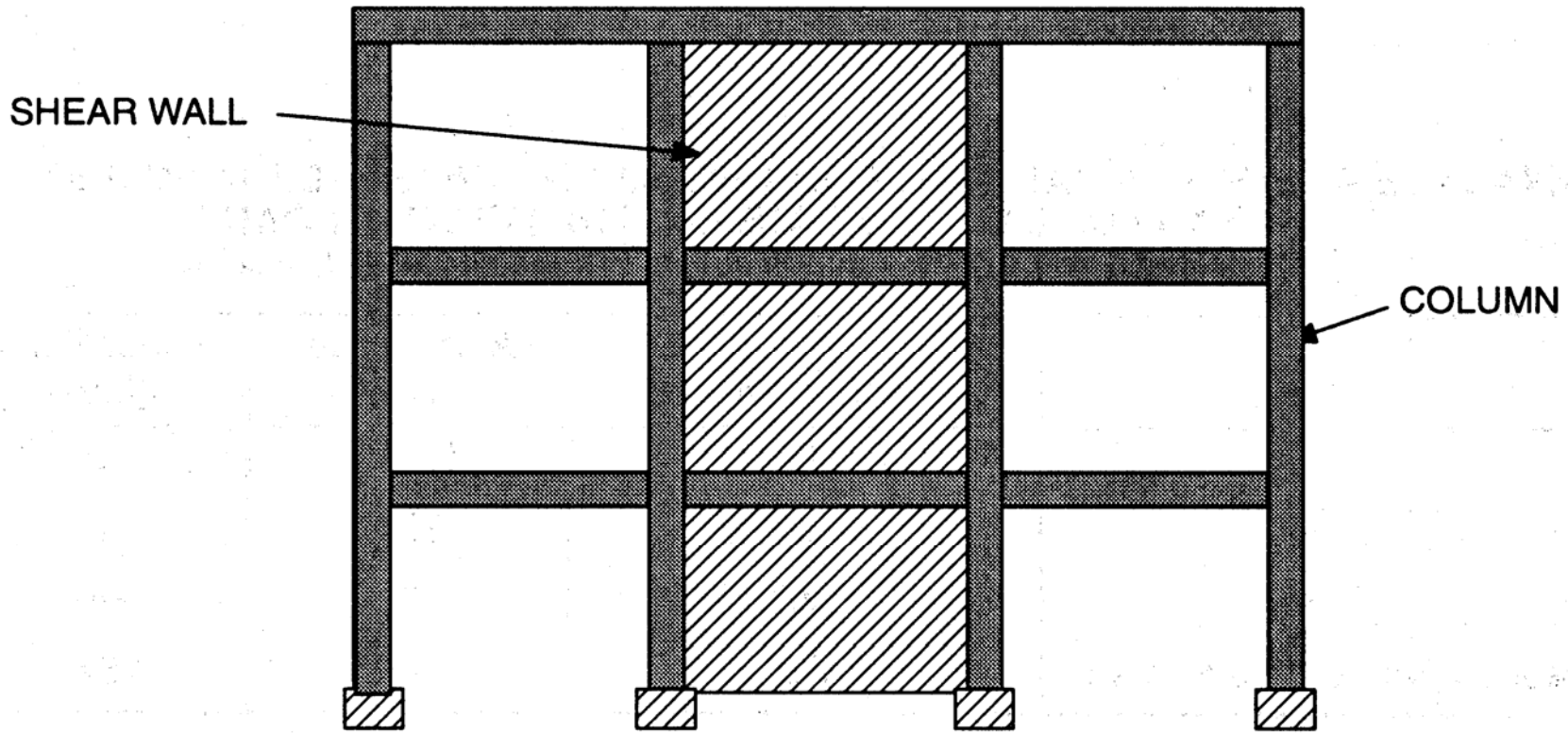

ELEVATION

Plan and Elevation of the Example Building Studied

EXAMPLE 5—(continued)

LIVE LOAD REDUCTION FOR CORNER COLUMN											
Level	**A_T (sq.ft.)**	**D (psf)**	**D (kips)**	**L_0**	**K_{LL}**	**K_{LL} x A_T**	**R**	**R (max)**	**Reduction (%)**	**L (psf)**	**L (kips)**
3	120	90	10.8	20	see below for roofs				20	16	1.9
2	120	120	14.4	50	1	120	0.00	40	0.00	50	6.0
1	120	120	14.4	50	1	120	0.00	40	0.00	50	6.0
							$R = L/L_0$				

LIVE LOAD REDUCTION FOR CORNER COLUMN (ALTERNATE METHOD)											
Level	**A_T (sq.ft.)**	**D (psf)**	**D (kips)**	**L_0**	**r**	**R**	**R (max)**	**R (max)***	**Reduction (%)**	**L (psf)**	**L (kips)**
3	120	90	10.8	20	see below for roofs				20	16	1.9
2	240	120	14.4	50	0.08	7.2	60	78.5	7.2	46.4	5.6
1	360	120	14.4	50	0.08	16.8	60	78.5	16.8	41.6	5.0
Roof			R_1 =	1.00							
			R_2 =	1.00							
			L_r =	20	Equation 16-4						
			L_r (max) =	20							
			L_r (min) =	12							

* as given by the second equation in Section 1607.9.2

EXAMPLE 2—(continued)

LIVE LOAD REDUCTION FOR INTERIOR SHEAR WALL

Level	A_T (sq.ft.)	D (psf)	D (kips)	L_0	K_{LL}	K_{LL} x A_T	R	R (max)	Reduction (%)	L (psf)	L (kips)
3	960	90	86.4	20	see below for roofs				12	17.6	16.9
2	960	120	115.2	50	1	960	26.6	40	26.6	36.7	35.2
1	960	120	115.2	50	1	960	26.6	40	26.6	36.7	35.2
							$R = L/L_0$				

LIVE LOAD REDUCTION FOR INTERIOR SHEAR WALL (ALTERNATE METHOD)

Level	A (sq.ft.)	D (psf)	D (kips)	L_0	r	R	R (max)	R (max)*	Reduction (%)	L (psf)	L (kips)
3	960	90	86.4	20	see below for roofs				12	17.6	16.9
2	1920	120	115.2	50	0.08	141.6	60	78.5	60.0	20	19.2
1	2880	120	115.2	50	0.08	218.4	60	78.5	60.0	20	19.2

Roof	R_1 =	0.60	
	R_2 =	1.00	
	L_r =	12	Equation 16-4
	L_r (max) =	20	
	L_r (min) =	12	

Roof Loads, Lr (IBC Section 1607.11)

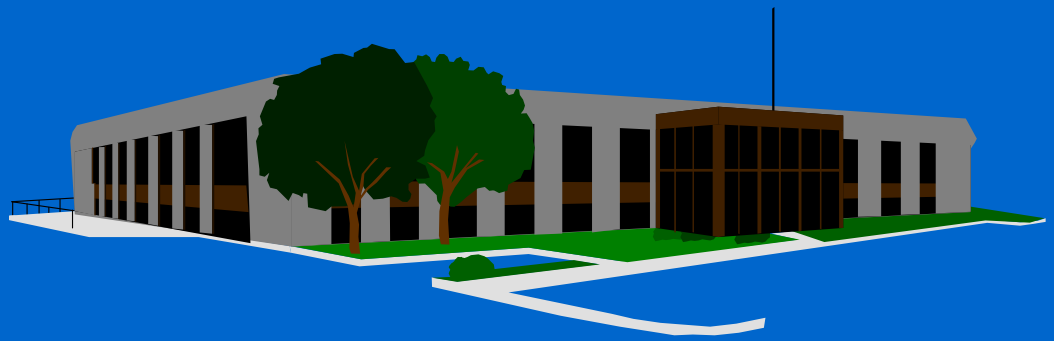

- **Roof Loads, Lr (IBC Section 1607.11)**

$L_r = L_o R_1 R_2$ Equation 16-27

Where $12 \leq L_r \leq 20$

L_r = Reduced love load per square foot of horizontal projection per square foot

L_0 = The minimum uniformaly distributed roof live load in table 1607.1.

IBC Chapter 16

- **Snow Loads, S [IBC Section 1608 & Section 7 of ASCE 7 – 98/05]**

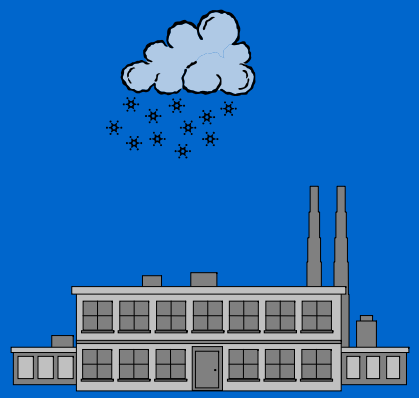

Flat Roof Snow Load

$$p_f = 0.7\, C_e\, C_t\, I\, p_g$$

•Snow Loads [IBC Section 1608 & ASCE 7 – 98/05]

- Ground-to-Roof Conversion Factor = 0.7

- Ground Snow Load

"Wisconsinism" (Comm 62.1608 (1))

Designers may use Wisconsin "county line" ground snow load map in lieu of IBC map.

IBC Chapter 16

•IBC Ground Snow Load

IBC Figure 1608.2 (ASCE 7-98/05 Fig. 7-1)

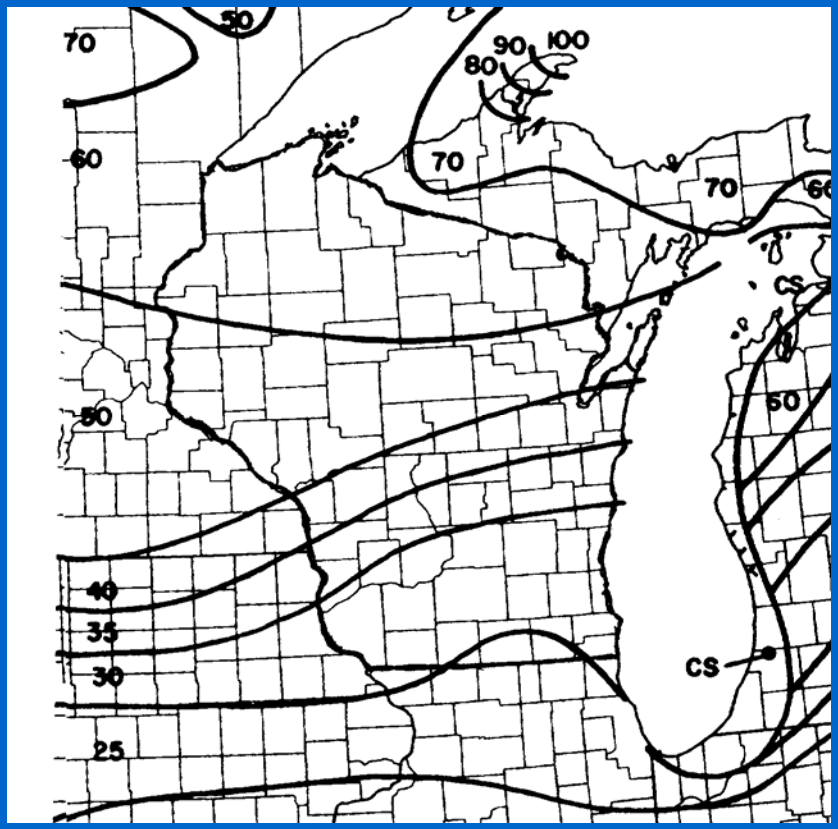

IBC Chapter 16

Ground Snow Load - "Wisconsinism"

Wisconsin Alternative (Comm Figure 62.16-1)

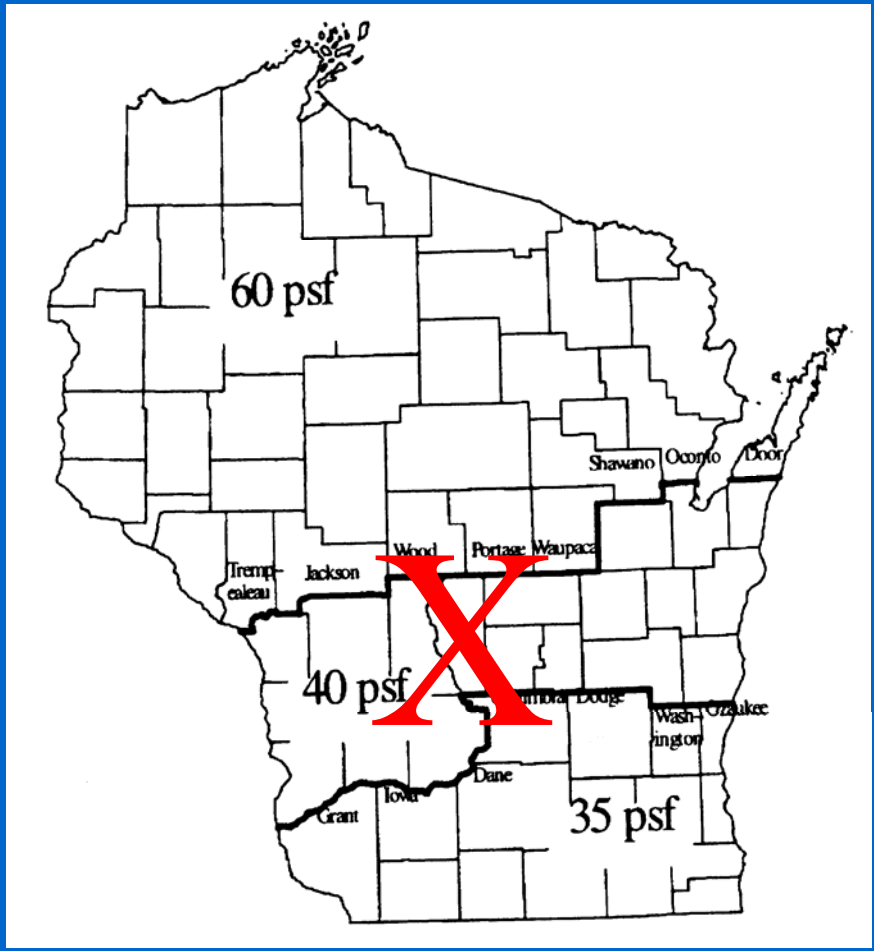

•Snow Loads [IBC Section 1608 & ASCE 7 – 98/05] (cont'd)

➢Exposure Factor, C_e

A = 1.1, City
B = 1.0, Suburb
C = 1.0, Minimal Obstruction
D = 0.9, Flat for a Mile

"Wisconsinism" (Comm 62.1608 (2))

X

Exposure factor of 1.0 may be used on all flat roofs regardless of terrain category.

ASCE 7 – 05 Table 7-2

TABLE 1608.3.1
SNOW EXPOSURE FACTOR, C_e

TERRAIN CATEGORY[a]	EXPOSURE OF ROOF[a, b]		
	Fully exposed[c]	Partially exposed	Sheltered
A (see Section 1609.4)	N/A	1.1	1.3
B (see Section 1609.4)	0.9	1.0	1.2
C (see Section 1609.4)	0.9	1.0	1.1
D (see Section 1609.4)	0.8	0.9	1.0
Above the treeline in windswept mountainous areas	0.7	0.8	N/A
In Alaska, in areas where trees do not exist within a 2-mile radius of the site	0.7	0.8	N/A

For SI: 1 mile = 1609 344 m.

a. The terrain category and roof exposure condition chosen shall be representative of the anticipated conditions during the life of the structure. An exposure factor shall be determined for each roof of a structure.

b. Definitions of roof exposure are as follows:
   1. Fully exposed shall mean roofs exposed on all sides with no shelter afforded by terrain, higher structures or trees. Roofs that contain several large pieces of mechanical equipment, parapets which extend above the height of the balanced snow load, h_b, or other obstructions are not in this category.
   2. Partially exposed shall include all roofs except those designated as "fully exposed" or "sheltered."
   3. Sheltered roofs shall mean those roofs located tight in among conifers that qualify as "obstructions."

c. Obstructions within a distance of 10 h_o provide "shelter," where h_o is the height of the obstruction above the roof level. If the only obstructions are a few deciduous trees that are leafless in winter, the "fully exposed" category shall be used except for terrain category "A." Note that these are heights above the roof. Heights used to establish the terrain category in Section 1609.4 are heights above the ground.

•Snow Loads [IBC Section 1608 & ASCE 7 – 98/05] (cont'd)

- Thermal Factor, C_t

  Heated, 1.0
  Structures just above freezing, 1.1
  Unheated, 1.2
  Continuously heated greenhouses, 0.85

- Importance Factor, I (IBC Table 1604.5)

  I = 1.0, All others
  II = 1.1, School, jail or more than 300
  III = 1.2, Hospital or Emergency Structure
  IV = 0.8, Ag., temp., or minor storage

ASCE 7 – 05 Table 7-3

~~TABLE 1608.3.2~~

THERMAL FACTOR, C_t

THERMAL CONDITION[a]	C_t
All structures except as indicated below	1.0
Structures kept just above freezing and others with cold, ventilated roofs in which the thermal resistance (*R*-value) between the ventilated space and the heated space exceeds 25 ft^2•hr•°F/Btu	1.1
Unheated structures	1.2
Continuously heated greenhouses[b] with a roof having a thermal resistance (*R*-value) less than 2.0 ft^2•hr•°F/Btu	0.85

For SI: °C = [(°F)-32]/1.8, 1 British thermal unit per hour = 0.2931W.

a. The thermal condition shall be representative of the anticipated conditions during winters for the life of the structure.

b. A continuously heated greenhouse shall mean a greenhouse with a constantly maintained interior temperature of 50°F or more during winter months. Such greenhouse shall also have a maintenance attendant on duty at all times or a temperature alarm system to provide warning in the event of a heating system failure.

•Snow Loads [IBC Section 1608 & ASCE 7 – 98/05] (cont'd)

- Rain-on Snow Surcharge

  Roof slope less than 1/2 inch per foot (2.38 degrees) to meet Section 7.10 ASCE 7

- Ponding Instability

  Roof slope less than 1/4 inch per foot (1.49 degrees) to meet Section 7.11 ASCE 7

Snow Load Comparison

Wisconsin Comm 53.11

Vs.

IBC 1608.2

Wisconsin Total	County	Ground-to- Roof factor	Exposure factor	Thermal factor	Importance factor	IBC total
30 psf	Kenosha	0.7	A, City, 1.1	All, 1.0	II, All Other, 1.0	23 psf
30 psf	Grant	0.7	B, Suburb, 1.0	1.0	III, School of More Than 300, 1.1	23 psf
30 psf	Sheboygan	0.7	C, Minimal Obstruction, 1.0	1.0	IV, Hospital or Emergency Structure, 1.2	25–29 psf
40 psf	Wood	0.7	D, Flat for a mile, 0.9	Unheated , 1.2	II, 1.0	30.2-38 psf
40 psf	Eau Claire	0.7	A, 1.1	1.0	III, 1.1	42.4 psf
40 psf	Burnett	0.7	B, 1.0	1.0	IV, 1.2	50.4 psf`
40 psf	Bayfield	0.7	C, 1.0	1.0	II, 1.0	42 psf
40 psf	Marinette	0.7	D, 0.9	1.0	III, 1.1	35-42 psf
30 psf	Brown	0.7	A, 1.1	1.0	IV, 1.2	37 psf

•Snow Loads [ASCE 7 – 98] (cont'd)

- Unbalanced Loads
- Drift Loads
  - Sloped Roof
  - Barrel Roof
  - Saw-Toothed Roof
  - High - Low Roof

ASCE 7 -98 Section 7.6.1

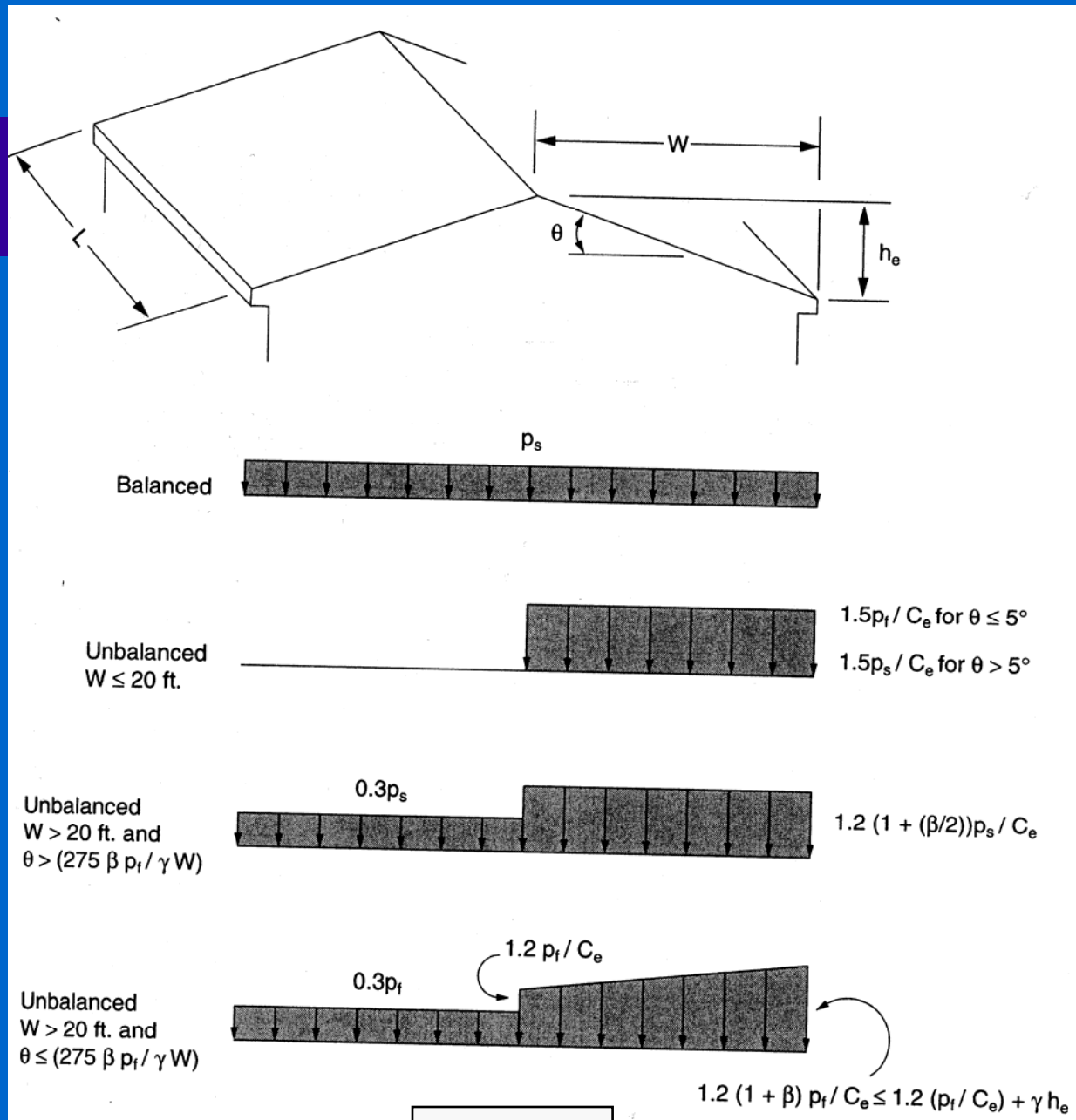

Figure 7-5

Note: Unbalanced loads need not be considered for θ ≥ 70° or for θ < 70/W + 0.5

EXAMPLE

- Print Shop in Green Bay
- $P_g = 40$ psf
- W = 30 feet
- $\theta = 33.6^0$ (8/12 pitch)
- L = 100 feet
- $C_e = 1.0$ for category B/partially exposed roof
- $C_t = 1.0$ for heated structure/unventilated roof
- $I_s = 1.0$ for category 1 (standard occupancy)

EXAMPLE (Cont'd)

- Flat roof snow load (p_f)

$$p_f = (0.7)(1.0)(1.0)(1.0)(40) = 28 \text{ psf}$$

EXAMPLE (Cont'd)

- Roof slope factor (C_s)

$p_s = C_s\, p_f$ (ASCE 7 - Eq (7-2))

For "warm roofs" and "other surfaces" $C_s = 0.91$

$p_s = 0.91\ (28) = 25.5$ psf

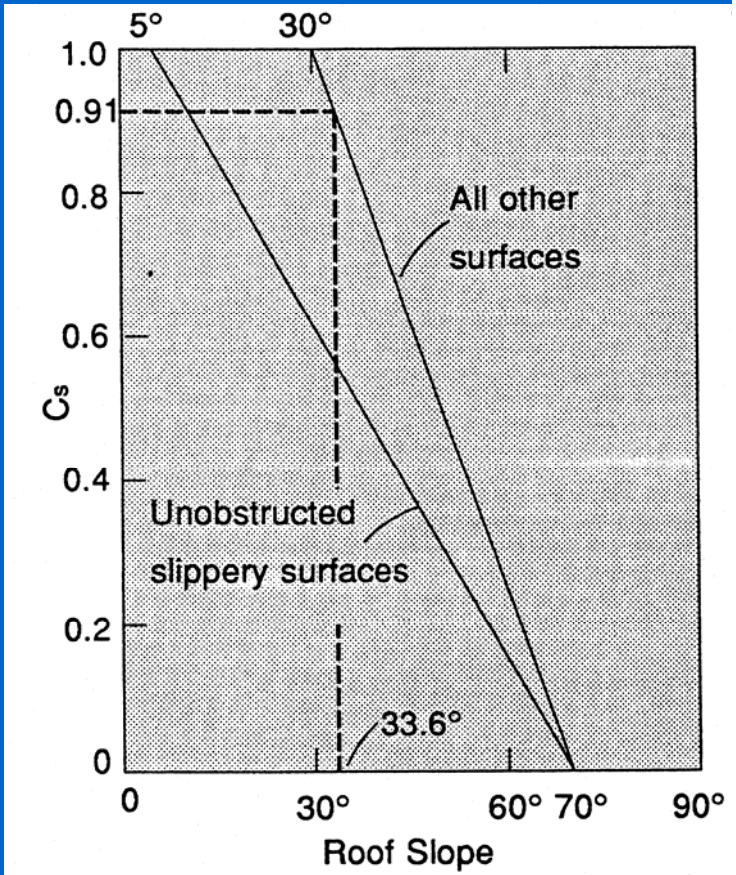

7-2a - Warm Roofs ($C_t \leq 1.0$)

- Unbalanced snow loading (IBC 1608.6)

Unbalanced loading need not be considered for

$\theta \geq 70^o$ or for $\theta < 70/W + 0.5$

$33.6^o > 70/W + 0.5 = 70/30 + 0.5 = 2.83^o$ … Unbalanced must be considered

• Example - Unbalanced Snow Load (cont'd)

To determine what unbalanced condition to design for check value of:

$$275\beta p_f/\gamma W$$

For L/W = 100/30 =3.33 ….

$\beta = 0.33 + 0.167\ L/W$ (ASCE 7 - Eq 7-3)

$= 0.33 + 0.167(3.33) = 0.89$

$\gamma = 0.13p_g + 14$ (ASCE 7 - Eq 7-4)

$= 0.13(40) + 14 = 19.2$ pcf

- Example - Unbalanced Snow Load (cont'd)

$33.6^o > 275\beta p_f/\gamma W = 275(0.89)(28)/(19.2)(30) = 11.9^o$

➢ Use the middle case as $W > 20$ and $\theta > 11.9^o$

Windward load is $0.3p_s = 0.3(25.5) = 7.7$ psf

Leeward load is $1.2(1 + \beta/2)p_s / C_e =$
$1.2(1 + 0.89/2)25.5)/(1.0) = 44.2$ psf

Example - Unbalanced Loads -- Summary

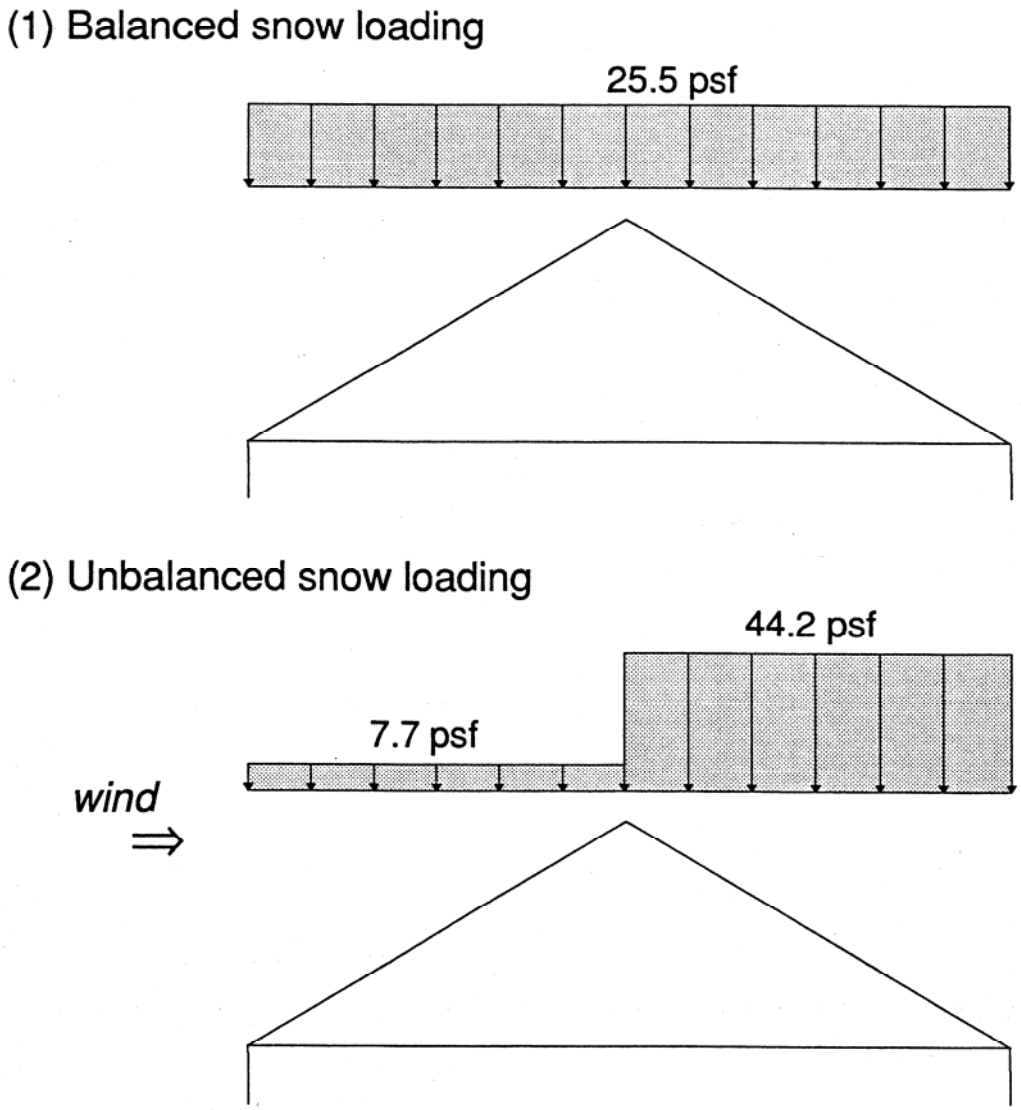

ASCE 7 -05 Section 7.6.1

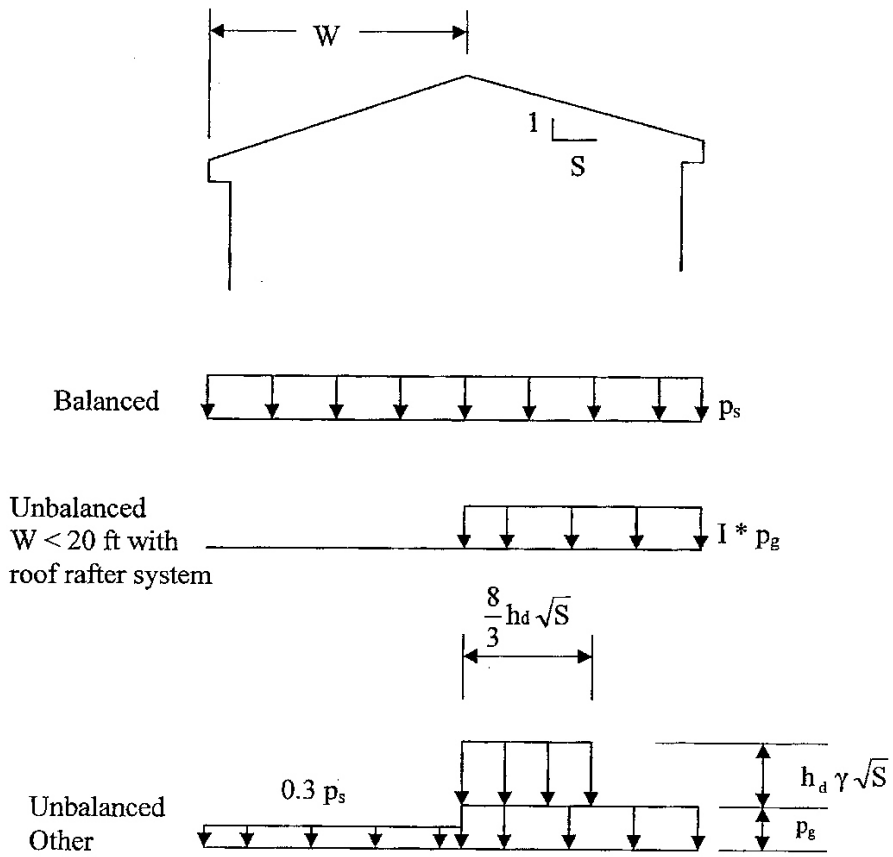

Note: Unbalanced loads need not be considered for $\theta > 70°$ or for $\theta <$ larger of 2.38° and 70/W + 0.5.

Figure 7-5
Balanced and Unbalanced Snow Loads for Hip and Gable Roofs

Alternate Standard for Unbalanced Snow Load approved!

Evaluation # 200264-A

1995 National Building Code of Canada for Unbalanced Roof Snow Load – Hip and Gable Roofs

SCOPE OF EVALUATION

- The alternate Canadian standard, 1995 National Building Code of Canada, for unbalanced roof snow load for hip and gable roofs has been evaluated for compliance with certain structural requirements of the current **Wisconsin Commercial Building Code (WCBC), Chapters Comm 61-65.** Pursuant to s. Comm 61.61 the alternate standard and methodology as described below is approved for use in the State of Wisconsin to satisfy the intent and the unbalanced snow load design provisions of **IBC 1608.6 (ASCE 7-98, section 7.6)**

Snow Drift on Lower Roofs - IBC

ASCE 7-98/05 Figure 7-8

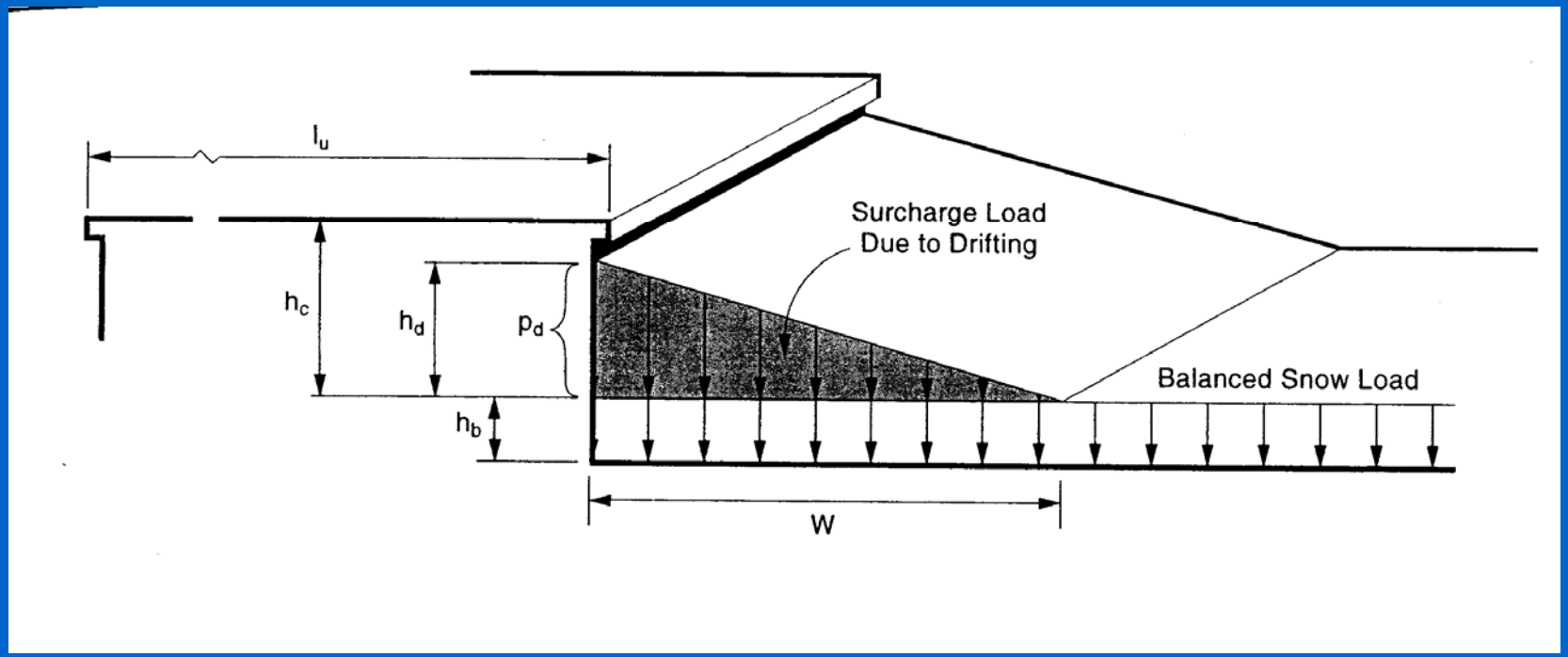

Snow drift example:

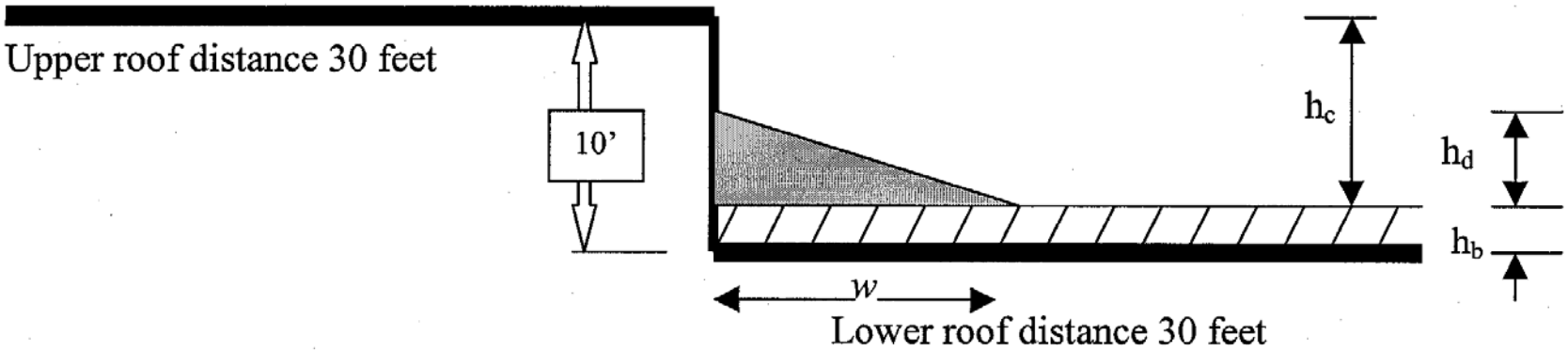

At $p_g = 60$ PSF
Leeward
$h_d = 2$ feet [from Figure 7-9 in ASCE 7]
Windward
$h_d = 1.5$ feet [3/4 of Figure 7-9 lower roof]
$w = 4\ h_d =$ **8 feet** $\leq 8(h_c) = 65'$, thus okay
$\gamma = 0.13p_g + 14 = 21.8$ PCF [Eq. 7-4 in ASCE 7]
$p_s = (1.0)p_f = 0.7\ p_g\ I\ C_e\ C_t = 42$ PSF
$h_b = p_s / \gamma = 42 / 21.8 = 1.9$ feet
$h_c = 10' - h_b = 8.1$ feet
$p_d = h_d\ \gamma = 2'\ (21.8\ \text{PCF}) = 43.6$ PSF
Total $= p_s + p_d = 42 + 43.6 =$ **85.6 PSF**

Under old Wisconsin Code design $1.0 \leq C_s \leq 3.0$
$C_s = 15(h/g) = 15(10/40) = 3.75$ use 3.0
Maximum load $= C_s\ g = 3(40) =$ **120 PSF**
$w = 2\ h = 2\ (10') =$ **20 feet**

At $p_g = 40$ PSF
Leeward
$h_d = 1.8$ feet
Windward
$h_d = 1.3$ feet
$w =$ **7.2 feet** $\leq 8(h_c) = 68'$, thus OK
$\gamma = 0.13p_g + 14 = 19.2$ PCF
$p_s = (1.0)p_f = 0.7\ p_g\ I\ C_e\ C_t = 28$ PSF
$h_b = p_s / \gamma = 28 / 19.2 = 1.5$ feet
$h_c = 10' - h_b = 8.5$ feet
$p_d = 1.8'\ (19.2\ \text{PCF}) = 34.6$ PSF
$p_s + p_d = 28 + 34.6 =$ **62.6 PSF**

old Wisconsin code $1.0 \leq C_s \leq 3.0$
$C_s = 15(10/30) = 5$ use $C_s = 3.0$
Maximum load $= 3(30) =$ **90 PSF**
$w = 2\ h =$ **20 feet**

Second snow drift example:

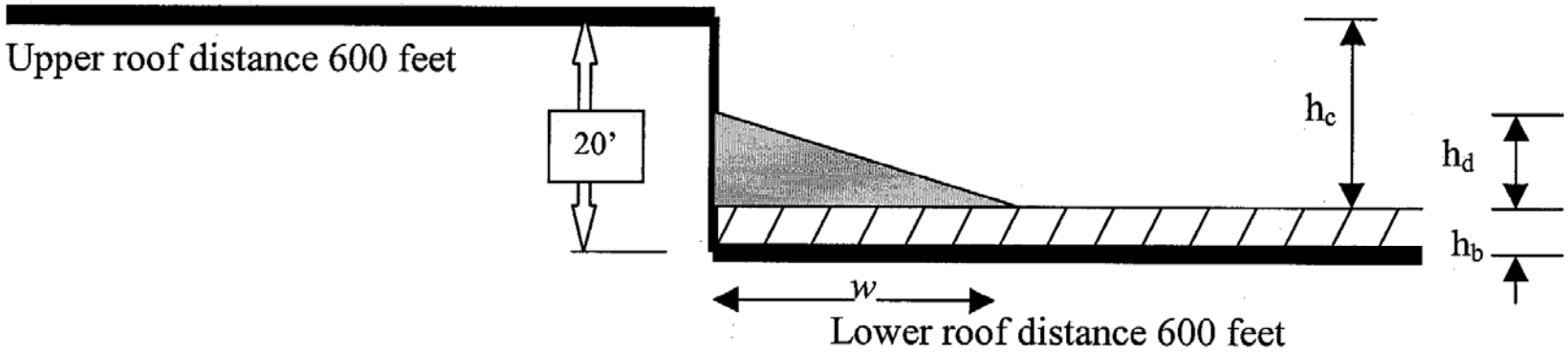

At $p_g = 60$ PSF
Leeward
$h_d = 9$ feet [from Figure 7-9 in ASCE 7]
Windward
$h_d = 6.75$ feet [3/4 of Figure 7-9 lower roof]
$w = 4\ h_d =$ **36 feet** $\leq 8(h_c) = 145'$, thus okay
$\gamma = 0.13p_g + 14 = 21.8$ PCF [Eq. 7-4 in ASCE 7]
$p_s = (1.0)p_f = 0.7\ p_g\ I\ C_e\ C_t = 42$ PSF
$h_b = p_s / \gamma = 42 / 21.8 = 1.9$ feet
$h_c = 20' - h_b = 18.1$ feet
$p_d = h_d\ \gamma = 9'\ (21.8\ \text{PCF}) = 196.2$ PSF
Total $= p_s + p_d = 42 + 196.2 =$ **238.2 PSF**

Under old Wisconsin Code design $1.0 \leq C_s \leq 3.0$
$C_s = 15(h/g) = 15(20/40) = 7.5$ use 3.0
Maximum load $= C_s\ g = 3(40) =$ **120 PSF**
$w = 2\ h = 2\ (20') =$ **40 feet**

At $p_g = 40$ PSF
Leeward
$h_d = 8$ feet
Windward
$h_d = 6$ feet
$w =$ **32 feet** $\leq 8(h_c) = 148'$, thus OK
$\gamma = 0.13p_g + 14 = 19.2$ PCF
$p_s = (1.0)p_f = 0.7\ p_g\ I\ C_e\ C_t = 28$ PSF
$h_b = p_s / \gamma = 28 / 19.2 = 1.5$ feet
$h_c = 20' - h_b = 18.5$ feet
$p_d = 8'\ (19.2\ \text{PCF}) = 153.6$ PSF
$p_s + p_d = 28 + 153.6 =$ **181.6 PSF**

old Wisconsin code $1.0 \leq C_s \leq 3.0$
$C_s = 15(20/30) = 10$ use $C_s = 3.0$
Maximum load $= 3(30) =$ **90 PSF**
$w = 2\ h = 2\ (20') =$ **40 feet**

IBC Chapter 16

- **Wind Loads [IBC Section 1609 & Section 6 of ASCE 7 – 98/05]**
  - Terms (IBC 1609.2 & ASCE 7 6.2 Definitions)
    - Main Wind Force Resisting System (MWFRS)
    - Components and Cladding
    - Low-Rise building
    - Simple Diaphragm
    - Enclosed, partially enclosed and open structures

IBC Chapter 16

- **Wind Loads [IBC Section 1609 & Section 6 of ASCE 7 – 98]**

"Wisconsinism" (Comm 62.1609)

For small buildings, Table 6-2 in ASCE 7-98 may be applied to both the main wind force resisting system(MWFRS) and components and cladding.

Main Wind Force Resisting System		h ≤ 30 ft.
Table 6-2	Design Wind Pressure	Simplified Procedure Walls & Roofs
Enclosed, Partially Enclosed Buildings		

DESIGN WIND PRESSURE (PSF)											
Location	Building Classification	Basic Wind Speed V (MPH)									
		85	90	100	110	120	130	140	150	160	170
Roof	Enclosed	-14	-16	-2[illegible]	-24	-29	-33	-39	-45	-51	-57
	Partially Enclosed	-19	-21	-26	-31	-37	-44	-51	-58	-66	-74
Wall	Enclosed or Partially Enclosed	12	14	17	20	24	29	33	38	43	49

Notes:

1. Design wind pressures above represent the following:
   Roof – Net pressure (sum of external and internal pressures) applied normal to all roof surfaces.
   Wall – Combined net pressure (sum of windward and leeward, external and internal pressures) applied normal to all windward wall surfaces.
2. Values shown are for exposure B. For other exposures, multiply values shown by the factor below:

Exposure	Factor
C	1.40
D	1.66

Components and Cladding		h ≤ 30 ft.
Table 6-3A	Design Wind Pressures	Simplified Procedure Walls & Roofs
Enclosed Buildings		

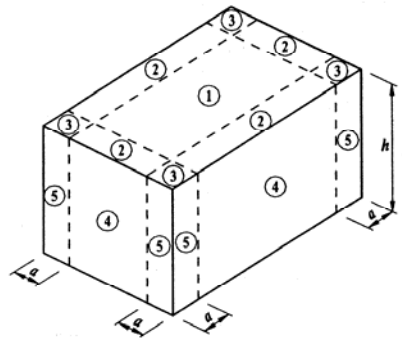

DESIGN WIND PRESSURE (PSF)													
Location	Zone	Effective Wind Area (SF)	Basic Wind Speed V (MPH)										
			85	90	100	110	120	130	140	150	160	170
Roof	1	10	+10 -13	+10 -15	+10 -18	+10 -22	+11 -26	+12 -30	+14 -35	+16 -40	+19 -46	+21 -52
		20	+10 -13	+10 -14	+10 -18	+10 -21	+10 -25	+12 -30	+13 -34	+15 -39	+18 -45	+20 -51
		100	+10 -12	+10 -13	+10 -16	+10 -20	+10 -24	+10 -28	+11 -32	+13 -37	+15 -42	+17 -48
	2	10	+10 -22	+10 -24	+10 -30	+10 -36	+11 -43	+12 -51	+14 -59	+16 -68	+19 -77	+21 -87
		20	+10 -19	+10 -22	+10 -27	+10 -33	+10 -39	+12 -46	+13 -53	+15 -61	+18 -69	+20 -78
		100	+10 -14	+10 -16	+10 -19	+10 -24	+10 -28	+10 -33	+11 -38	+13 -44	+15 -50	+17 -56
	3	10	+10 -33	+10 -37	+10 -45	+10 -55	+11 -65	+12 -77	+14 -89	+16 -102	+19 -116	+21 -131
		20	+10 -27	+10 -30	+10 -37	+10 -45	+10 -54	+12 -63	+13 -73	+15 -84	+18 -96	+20 -108
		100	+10 -14	+10 -16	+10 -19	+10 -24	+10 -28	+10 -33	+11 -38	+13 -44	+15 -50	+17 -56
Walls	4	10	+13 -14	+15 -16	+18 -19	+22 -24	+26 -28	+30 -33	+35 -38	+40 -44	+46 -50	+52 -56
		50	+12 -13	+13 -14	+16 -18	+19 -22	+23 -26	+27 -30	+31 -35	+36 -40	+41 -46	+46 -51
		500	+10 -11	+11 -12	+13 -15	+16 -18	+19 -21	+23 -25	+26 -29	+30 -34	+34 -38	+39 -43
	5	10	+13 -17	+15 -19	+18 -24	+22 -29	+26 -35	+30 -41	+35 -47	+40 -54	+46 -62	+52 -70
		50	+12 -15	+13 -16	+16 -20	+19 -25	+23 -29	+27 -34	+31 -40	+36 -46	+41 -52	+46 -59
		500	+10 -11	+11 -12	+13 -15	+16 -18	+19 -21	+23 -25	+26 -29	+30 -34	+34 -38	+39 -43

Metric Conversion: 1 PSF = 47.9 pascals 1 SF = 0.0929 SM 1 MPH = 0.447 M/S

Notes:

1. Design wind pressures above represent the net pressure (sum of external and internal pressures) applied normal to all surfaces.
2. Values shown are for exposure B. For other exposures, multiply values shown by the following factor: exposure C: 1.40 and exposure D: 1.66.
3. Linear interpolation between values of tributary area is permissible.
4. Values shown are for an importance factor I = 1.0. For other values of I, multiply values shown by I.
5. Plus and minus signs signify pressure acting toward and away from the exterior surface, respectively.
6. All component and cladding elements shall be designed for both positive and negative pressures shown in the table.
7. Notation:
   a: 10 percent of least horizontal dimension or 0.4 *h*, whichever is smaller, but not less than 4% of least horizontal dimension or 3 ft.
   h: Mean roof height in feet (meters).

IBC Chapter 16

•Wind Loads [IBC Section 1609 & Section 6 of ASCE 7 – 98]

- Wind Speed - 90 MPH (3-second gust)
  IBC Figure 1609
- Design Procedures
  - ASCE Simplified for Low-Rise (6.4)
  - ASCE Analytical Procedure (6.5)
  - ASCE Wind Tunnel (6.6)
  - IBC Simplified for Low-Rise

ASCE 7 - 05 Simplified Procedure (Section 6.4)

- **6.4.1 Scope**

  A building whose design wind loads are determined in accordance with this section shall meet all the conditions of 6.4.1.1 or 6.4.1.2.

- **6.4.1.1 Main Wind Force Resisting System** ASCE 7 -05

1. the building is a simple diaphragm building as defined in 6.2,
2. the building is a low rise building as defined in 6.2
3. the building is enclosed as defined in 6.2 and conforms to the windborn debris provisions of 6.5.9.3
4. the building is a regular shaped building or structure as defined in 6.2,
5. the building is not classified as a flexible building as defined in 6.2,
6. the building does not have response characteristics making it subject to across wind loading, vortex shedding, instability due to galloping or flutter. …..
7. the building has an approximately symmetrical cross section in each direction with either a flat roof, or gable or hip roof with $\theta \leq 45^{o}$, and
8. The building is exempted from torsional load cases ….

- **6:2 Definitions**

Building, simple diaphragm: a building in which both windward and leeward wind loads are transmitted through floor and roof diaphragms to the same vertical main wind force resisting system (e.g. no structural separations)

Building, low-rise: Enclosed or partially enclosed buildings which comply with the following conditions:

1. Mean roof height h less than or equal to 60 ft; and
2. Mean roof height h does not exceed least horizontal dimension.

• 6.4.1.2 Components and Cladding

1. the mean roof height $h \leq 60$ ft.,
2. the building is enclosed as defined in 6.2 and conforms to the windborn debris provisions of 6.5.9.3,
4. the building is a regular shaped building or structure as defined in 6.2,
5. the building does not have response characteristics making it subject to across wind loading, vortex shedding, instability due to galloping or flutter. …..
7. the building has either a flat roof, or gable roof with $\theta \leq 45^{o}$, or hip roof with $\theta \leq 27^{o}$.

6.4.2 Design Procedure.

1. The *basic wind speed V* shall be determined in accordance with 6.5.4. The wind shall be assumed to come from any horizontal direction.

2. An *importance factor I* shall be determined in accordance with 6.5.5.

3. An *exposure category* shall be determined in accordance with 6.5.6.

4. A height and exposure adjustment coefficient, λ, shall be determined from Figure 6-2.

6.4.2 Design Procedure (cont'd).

$\mathbf{p_s}$ for MWFRS = $\lambda K_{zt} I p_{s30}$ **Eq. 6-1**

$\mathbf{p_{net}}$ for C&C = $\lambda K_{zt} I p_{net30}$ **Eq. 6-2**

6.5.4 *Basic wind speed V*: Get wind speed from Figure 6-1 in ASCE 7 which is the same as 2006 IBC Figure 1609.

6.5.5 *Importance factor I:* Get importance factor from Table 6-1 in ASCE 7 which are the same as those given in 2000 IBC Table 1604.5 for wind.

6.5.6 *Exposure category:* The exposure category is based on ground surface roughness that is determined from natural topography, vegetation, and constructed facilities.

6.5.6 *Exposure category:* The exposure category is based on ground surface roughness that is determined from natural topography, vegetation, and constructed facilities.

- **Surface Roughness Categories are:**

  B; Urban and suburban areas, wooded areas or other terrain….
  C; Open terrain with scattered obstrucions having heights generally less than 30 ft.. ….
  D; Flat, unobstructed areas and water surfaces outside hurricane prone regions. …

- **Exposure categories are similar – B, C , D – and related to surface roughness.**

IBC Table 1609.6.2.1 (4) values same as ASCE 7-05 Height and exposure adjustment coefficient, λ, Figure 6-2

TABLE 1609.6.2.1(4)
HEIGHT AND EXPOSURE
ADJUSTMENT COEFFICIENTS[a]

MEAN ROOF (feet)	EXPOSURE		
	B	C	D
15	1.00	1.21	1.47
20	1.00	1.29	1.55
25	1.00	1.35	1.61
30	1.00	1.40	1.66
35	1.05	1.45	1.70
40	1.09	1.49	1.74
45	1.12	1.53	1.78
50	1.16	1.56	1.81
55	1.19	1.59	1.84
60	1.22	1.62	1.87

For SI: 1 foot = 304.8 mm.

a. All table values shall be adjusted for other exposures and heights by multiplying by the above coefficients.

•6.5.7.1 Wind Speed-Up over Hills, Ridges and Escarpments.

Wind speed-up effects at isolated hills, ridges, and escarpments constituting abrupt changes in the general topography shall be included in the design……..

Wind Loads [IBC Section 1609.6.2, Simplified for Low-Rise]

Buildings shall be designed for the loads from Tables 1609.6.2.1(1), 1609.6.2.1(2) and 1609.6.2.1(3) using figure 1609, multiplied by the appropriate height and exposure coefficient from Table 1609.6.2.1(4) and importance factor from Table 1604.5.

**** Use new ASCE 7-05 Section 6.4
Method 1 – Simplified Procedure*****

2000 IBC

TABLE 1609.6.2.1(1)
MAIN WINDFORCE-RESISTING SYSTEM LOADS FOR A BUILDING WITH MEAN ROOF HEIGHT OF 30 FEET LOCATED IN EXPOSURE B[a] (psf)

BASIC WIND SPEED V (mph—3-second gust)	LOAD DIRECTION	ROOF ANGLE	HORIZONTAL LOADS[b]				VERTICAL LOADS						MAXIMUM HORIZONTAL WALL LOADS[d]			
			End zone		Interior zone		End zone		Interior zone		Windward overhang		Zone			
			Wall	Roof[c]	Wall	Roof[c]	Windward roof	Leeward roof	Windward roof	Leeward roof	End zone	Interior zone	1E	4E	1	4
85	Transverse	0 to 5°	11.5	-5.9	7.6	-3.5	-13.8	-7.8	-9.6	-6.1	-19.3	-15.1	8.7	-6.7	6.4	-5.2
		20°	15.9	-4.2	10.6	-2.3	-13.8	-9.6	-9.6	-7.3	-19.3	-15.1	10.8	-9.0	7.8	-6.7
		30°<angle≤45°	12.9	8.8	10.2	[illegible]	[illegible]	-7.8	4.3	-6.7	-4.5	-5.2	9.6	-7.3	8.2	-6.1
	Longitudinal	All angles	11.5	-5.9	7.6	-3.5	-13.8	-7.8	-9.6	-6.1	-19.3	-15.1	8.7	-6.7	6.4	-5.2
90	Transverse	0 to 5°	12.8	-6.7	8.5	-4.0	-15.4	-8.8	-10.7	-6.8	-21.6	-16.9	9.8	-7.5	7.2	-5.8
		20°	17.8	-4.7	11.9	-2.6	-15.4	-10.7	-10.7	-8.1	-21.6	-16.9	12.1	-10.1	8.8	-7.5
		30°<angle≤45°	14.4	9.9	11.5	7.9	[illegible]	-8.8	4.8	-7.5	-5.1	-5.8	10.7	-8.1	9.1	-6.8
	Longitudinal	All angles	12.8	-6.7	8.5	[illegible]	[illegible]	-8.8	-10.7	-6.8	-21.6	-16.9	9.8	-7.5	7.2	-5.8
100	Transverse	0 to 5°	15.9	-8.2	10.5	-4.9	-19.1	-10.8	-13.3	-8.4	-26.7	-20.9	12.0	-9.3	8.8	-7.2
		20°	22.0	-5.8	14.6	-3.2	-19.1	-13.3	-13.3	-10.1	-26.7	-20.9	14.9	-12.5	10.8	-9.3
		30°<angle≤45°	17.8	12.2	14.2	9.8	6.9	-10.8	5.9	-9.3	-6.3	-7.2	13.3	-10.1	11.3	-8.4
	Longitudinal	All angles	15.9	-8.2	10.5	-4.9	-19.1	-10.8	-13.3	-8.4	-26.7	-20.9	12.0	-9.3	8.8	-7.2
105	Transverse	0 to 5°	17.5	-9.1	11.6	-5.4	-21.0	-11.9	-14.6	-9.2	-29.4	-23.0	13.3	-10.3	9.7	-7.9
		20°	24.2	-6.4	16.1	-3.5	-21.0	-14.6	-14.6	-11.1	-29.4	-23.0	16.5	-13.8	11.9	-10.3
		30°<angle≤45°	19.7	-13.4	15.6	10.8	7.6	-11.9	6.6	-10.3	-6.9	-7.9	14.6	-11.1	12.4	-9.2
	Longitudinal	All angles	17.5	-9.1	11.6	-5.4	-21.0	-11.9	-14.6	-9.2	-29.4	-23.0	13.3	-10.3	9.7	-7.9
		0 to 5°	19.2	-10.0	12.7	-5.9	-23.1	-13.1	-16.0	-10.1	-32.3	-25.3	14.6	-11.3	10.7	-8.7

Main Wind Force Resisting System – Method 1		h ≤ 60 ft.
Figure 6-2 (cont'd)	Design Wind Pressures	Walls & Roofs
Enclosed Buildings		

Simplified Design Wind Pressure , p_{S30} (psf) *(Exposure B at h = 30 ft. , Kzt = 1.0, with I = 1.0)*

Basic Wind Speed (mph)	Roof Angle (degrees)	Load Case	Zones									
			Horizontal Pressures				Vertical Pressures				Overhangs	
			A	B	C	D	E	F	G	H	EOH	GOH
85	0 to 5°	1	11.5	-5.9	7.6	-3.5	-13.8	-7.8	-9.6	-6.1	-19.3	-15.1
	10°	1	12.9	-5.4	8.6	-3.1	-13.8	-8.4	-9.6	-6.5	-19.3	-15.1
	15°	1	14.4	-4.8	9.6	-2.7	-13.8	-9.0	-9.6	-6.9	-19.3	-15.1
	20°	1	15.9	-4.2	10.6	-2.3	-13.8	-9.6	-9.6	-7.3	-19.3	-15.1
	25°	1	14.4	2.3	10.4	2.4	-6.4	-8.7	-4.6	-7.0	-11.9	-10.1
		2	------	------	------	------	-2.4	-4.7	-0.7	-3.0	------	------
	30 to 45	1	12.9	8.8	10.2	7.0	1.0	-7.8	0.3	-6.7	-4.5	-5.2
		2	12.9	8.8	10.2	7.0	5.0	-3.9	4.3	-2.8	-4.5	-5.2
90	0 to 5°	1	12.8	-6.7	8.5	-4.0	-15.4	-8.8	-10.7	-6.8	-21.6	-16.9
	10°	1	14.5	-6.0	9.6	-3.5	-15.4	-9.4	-10.7	-7.2	-21.6	-16.9
	15°	1	16.1	-5.4	10.7	-3.0	-15.4	-10.1	-10.7	-7.7	-21.6	-16.9
	20°	1	17.8	-4.7	11.9	-2.6	-15.4	-10.7	-10.7	-8.1	-21.6	-16.9
	25°	1	16.1	2.6	11.7	2.7	-7.2	-9.8	-5.2	-7.8	-13.3	-11.4
		2	------	------	------	------	-2.7	-5.3	-0.7	-3.4	------	------
	30 to 45	1	14.4	9.9	11.5	7.9	1.1	-8.8	0.4	-7.5	-5.1	-5.8
		2	14.4	9.9	11.5	7.9	5.6	-4.3	4.8	-3.1	-5.1	-5.8
	0 to 5°	1	15.9	-8.2	10.5	-4.9	-19.1	-10.8	-13.3	-8.4	-26.7	-20.9
	10°	1	17.9	-7.4	11.9	-4.3	-19.1	-11.6	-13.3	-8.9	-26.7	-20.9

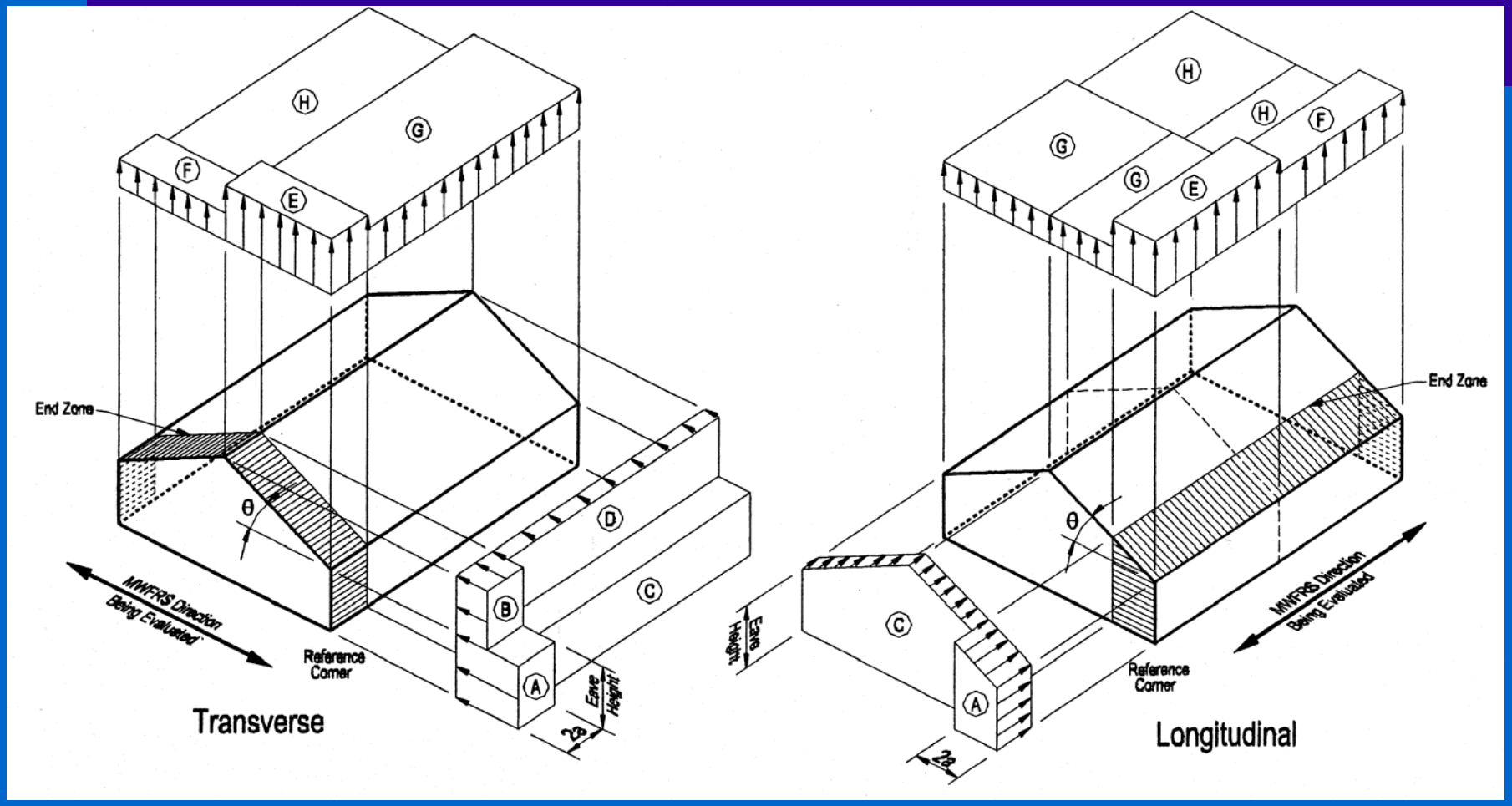
H
G
F
E
End Zone
θ
D
C
B
A
MWFRS Direction Being Evaluated
Reference Corner
Eave Height
2a
Transverse
H
G
F
E
End Zone
θ
C
A
Eave Height
MWFRS Direction Being Evaluated
Reference Corner
2a
Longitudinal

IBC Chapter 16

- **Soil Lateral Loads (IBC Section 1610)**

  "Wisconsinism" (Comm 62.1610)
  Soil lateral load table has been amended and expanded to include design lateral load for at-rest conditions.

- **Rain Loads (IBC Section 1611)**

- **Flood Loads (IBC Section 1612)**

  "Wisconsinism" (Comm 62.1612)
  Not included as part of this code.

Soil Lateral Loads -- Wisconsinism

Table 62.1610
Soil Lateral Load

Description of Backfill Material[a]	Unified Soil Classification	Active Condition[b] Design Lateral Soil Load psf Per Foot of Depth	At–rest Condition[c] Design Lateral Soil Load psf Per Foot of Depth
Well–graded clean gravels; gravel & sand mixes	GW	30	50
Poorly graded clean gravels; gravel & sand mixes	GP	30	50
Silty gravel, poorly graded gravel & sand mixes	GM	40	60
Clayey gravel, poorly graded gravel & clay mixes	GC	45	65
Well–graded clean sand; gravel & sand mixes	SW	30	50
Poorly graded clean sand; sand & gravel mixes	SP	30	50
Silty sands, poorly graded sand & silt mixtures	SM	45	65
Sand–silt–clay mix with plastic fines	SM–SC	45	65
Clayey sand, poorly graded sand & clay mixes	SC	60	100
Inorganic silts and clayey silts	ML	45	100
Mixture of inorganic silt and clay	ML–CL	60	100
Inorganic clays of medium plasticity	CL	60	100
Organic silt and silty clay, low plasticity	OL	d	d
Inorganic clayey silt, elastic silt	MH	d	d
Inorganic clays of high plasticity	CH	d	d
Organic clays and organic silty clay	OC	d	d

[a] The definition and classification of soil materials shall be in accordance with ASTM D 2487.

[b] Where wall is expected to deflect a minimum of 0.001 times the retained soil height. Design lateral soil loads are for moist conditions for the specified soil at typical specified compacted densities. Actual field conditions shall govern. The lateral pressure of improperly drained, submerged, or saturated soils shall include the buoyant unit soil weight times appropriate K_a, plus the hydrostatic pressure. K_a is the coefficient of active earth pressure.

c Where wall is expected to deflect less than 0.001 times the retained soil height. Design lateral soil loads are for moist conditions for the specified soil at typical specified compacted densities. Actual field conditions shall govern. The lateral pressure of improperly drained, submerged, or saturated soils shall include the buoyant unit soil weight times appropriate K_o, plus the hydrostatic pressure. K_o is the coefficient of earth pressure at rest.

[d] Unsuitable as backfill material.

squared or exceeded in any given year.

TABLE 1610.1
SOIL LATERAL LOAD

DESCRIPTION OF BACKFILL MATERIAL[c]	UNIFIED SOIL CLASSIFICATION	DESIGN LATERAL SOIL LOAD[a] (pound per square foot per foot of depth)	
		Active pressure	At-rest pressure
Well-graded, clean gravels; gravel-sand mixes	GW	30	60
Poorly graded clean gravels; gravel-sand mixes	GP	30	60
Silty gravels, poorly graded gravel-sand mixes	GM	40	60
Clayey gravels, poorly graded gravel-and-clay mixes	GC	45	60
Well-graded, clean sands; gravelly sand mixes	SW	30	60
Poorly graded clean sands; sand-gravel mixes	SP	30	60
Silty sands, poorly graded sand-silt mixes	SM	45	60
Sand-silt clay mix with plastic fines	SM-SC	45	100
Clayey sands, poorly graded sand-clay mixes	SC	60	100
Inorganic silts and clayey silts	ML	45	100
Mixture of inorganic silt and clay	ML-CL	60	100
Inorganic clays of low to medium plasticity	CL	60	100
Organic silts and silt clays, low plasticity	OL	Note b	Note b
Inorganic clayey silts, elastic silts	MH	Note b	Note b
Inorganic clays of high plasticity	CH	Note b	Note b
Organic clays and silty clays	OH	Note b	Note b

For SI: 1 pound per square foot per foot of depth = 0.157 kPa/m, 1 foot = 304.8 mm.

a. Design lateral soil loads are given for moist conditions for the specified soils at their optimum densities. Actual field conditions shall govern. Submerged or saturated soil pressures shall include the weight of the buoyant soil plus the hydrostatic loads.

b. Unsuitable as backfill material.

c. The definition and classification of soil materials shall be in accordance with ASTM D 2487.

Amount of wall movement dependent on

•floor system type supporting wall

•joint type between floor and top of wall

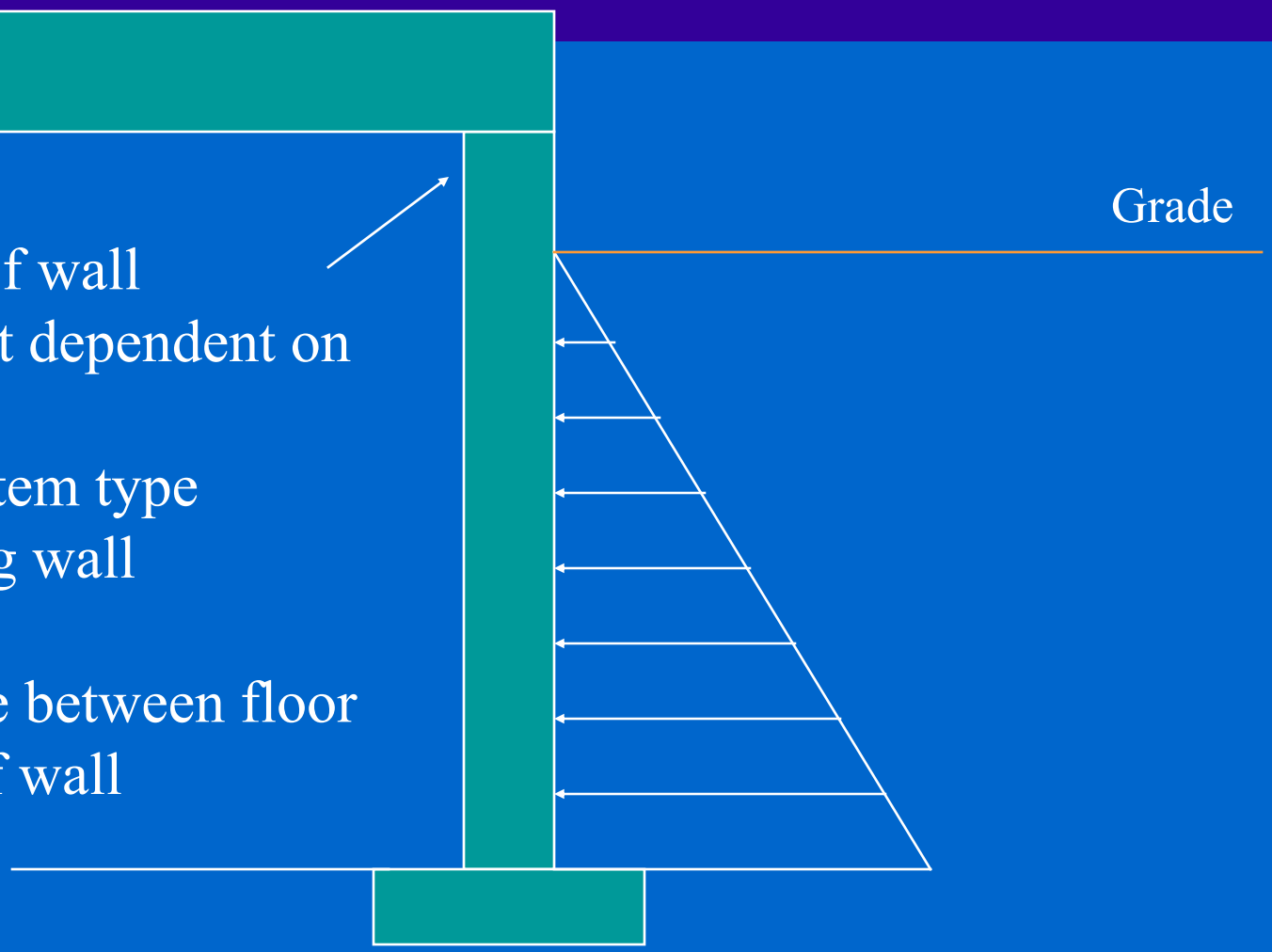

IBC Chapter 16

•Seismic Loads

9/3/99 WSJ

Hang on: Mild earthquake rattles northern Illinois

By James Webb
Associated Press

A minor earthquake rippled through northern Illinois near Dixon on Thursday and faded quietly into the surrounding farmland, prompting some residents to blame the unusual disturbance on passing trucks or other more typical hazards.

Authorities said there were no immediate reports of damage or injuries from the quake, which occurred at 11:17 a.m. and had a preliminary magnitude of 3.5, according to the U.S. Geological Survey. The epicenter was 10 miles south-southeast of Dixon, about 90 miles west of Chicago.

"A few people called from places like Morrison. They probably felt a vibration or something — thought they'd had an explosion," said Bill VanBuren, a phone operator at the Whiteside County Sheriff's Department. "But mostly it was small stuff. Pictures fell off

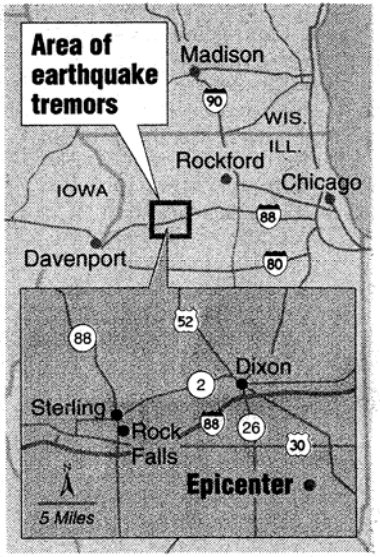

WSJ graphic

and then on a nearby cement plant. Seth Stein, a professor of geological sciences at Northwest-

IBC Chapter 16

•Earthquake Loads (IBC Section 1613 and ASCE 7-05, Section 11.0)

Terms

◊ Occupancy Category -- I, II & III (IBC 1604.5)

◊ Site Class -- A thru F (IBC 1613.5.2)

◊ Ground Motion Spectral Response Acceleration, 1.0 Sec & 0.2 Sec

◊ Seismic Design Category -- A thru F (IBC 1613.5.6)

IBC Chapter 16

- **Earthquake Loads (IBC Section 1613 and ASCE 7-05)**

1613.1 Scope. Every structure, and portion thereof, including nonstructural components that are permanently attached to structures and their supports and attachments, shall be designed and constructed to resist the effects of earthquake motions in accordance with ASCE 7, excluding chapter 14 and Appendix 11A. The seismic design category for a structure is permitted to be determined in accordance with Section 1613 or ASCE 7.

IBC Chapter 16

•Earthquake Loads - Fig. 1613 (2)

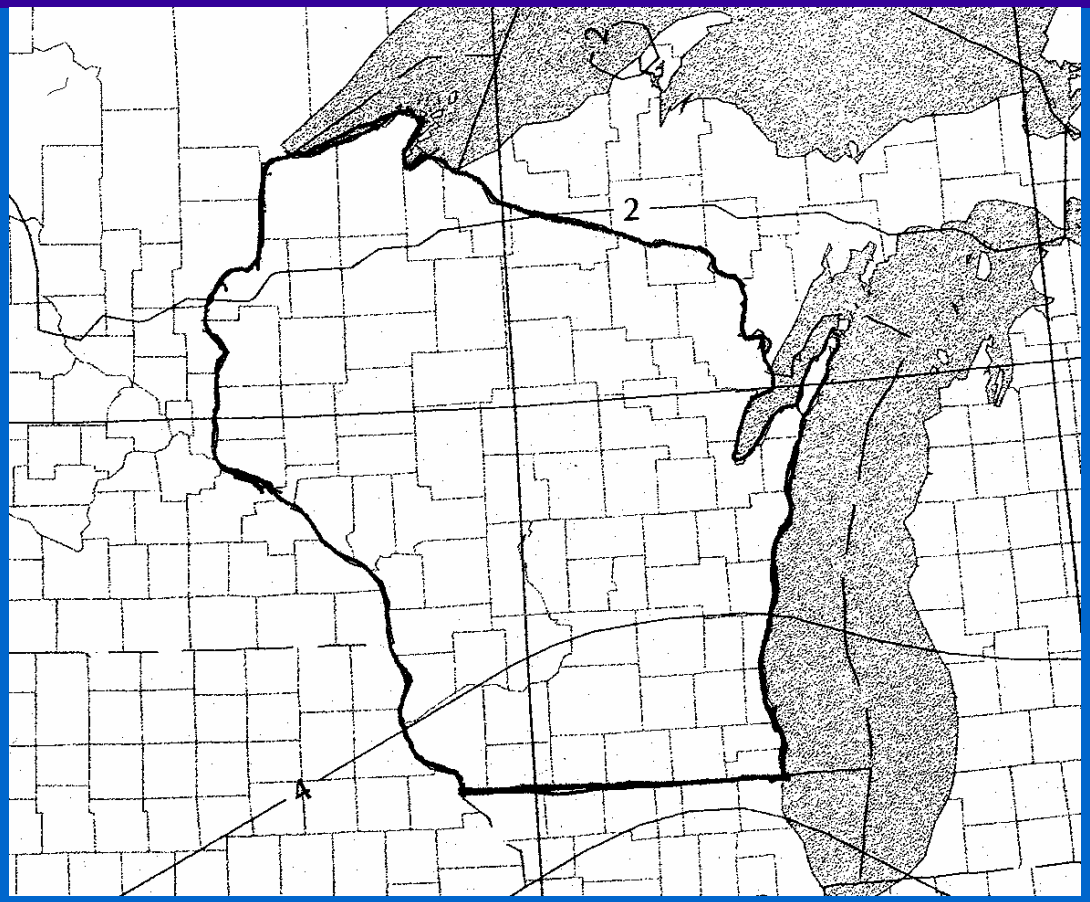

Ground Motion for 1.0 sec Spectral Response Acceleration (% g)

Beloit ..... ZC = 53511 .....Ss = 0.146		
	Use Group	
Site Class	I	III
A ..... S_{DS} = 0.146 (0.8) (2/3) = 0.078	A	A
S_{D1} = 0.055 (0.8) (2/3) = 0.029	A	A
B ..... S_{DS} = 0.146 (1.0) (2/3) = 0.097	A	A
S_{D1} = 0.055 (1.0) (2/3) = 0.037	A	A
C ..... S_{DS} = 0.146 (1.20) (2/3) = 0.117	A	A
S_{D1} = 0.055 (1.70) (2/3) = 0.062	A	A
D ..... S_{DS} = 0.146 (1.60) (2/3) = 0.156	A	A
S_{D1} = 0.055 (2.40) (2/3) = 0.088	B	C
E ..... S_{DS} = 0.146 (2.50) (2/3) = 0.243	B	C
S_{D1} = 0.055 (3.50) (2/3) = 0.128	B	C

IBC Chapter 16

•Earthquake Loads

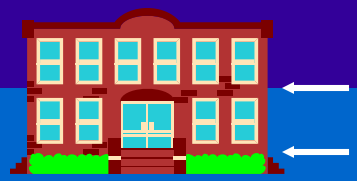

ASCE 7-05 Section 11.7.2

Minimum lateral force applied simultaneously at each floor level (Equation 11.7-1)

$$\mathbf{F_x = 0.01\ w_x}$$

where:

F_x = design lateral force at story *x*

w_x = portion of the total dead load of the structure, D, located or assigned to Level *x*

STRUCTURAL TESTS AND SPECIAL INSPECTIONS

"Wisconsinism" (Comm 62.1700)

Except for the requirements of IBC section 1710 to 1715, this chapter is not included as part of the code.

SOILS AND FOUNDATIONS

- Investigations (IBC Section 1802)
- Excavation, grading and filling (IBC Section 1803)
- Allowable Load-bearing Values of Soils (IBC Section 1804)
- Footings and Foundations (IBC Section 1805)
  - Design and Construction
- Retaining Walls (IBC Section 1806)
- Dampproofing and Waterproofing (IBC Section 1807)

SOILS AND FOUNDATIONS (Cont'd)

- Investigations (IBC Section 1802)
  - Where required
  - How soil should be classified
  - Investigation
  - Reports

SOILS AND FOUNDATIONS (Cont'd)

- Excavation, grading and filling
  - Placement of backfill
  - Site Grading
  - Compacted fill material – 12 exception

IBC Chapter 18

SOILS AND FOUNDATIONS (Cont'd)

Allowable Load-bearing Values of Soils (IBC Section 1804)

TABLE 1804.2
ALLOWABLE FOUNDATION AND LATERAL PRESSURE

CLASS OF MATERIALS	ALLOWABLE FOUNDATION PRESSURE (psf)[d]	LATERAL BEARING (psf/f below natural grade)[d]	LATERAL SLIDING	
			Coefficient of friction[a]	Resistance (psf)[b]
1. Crystalline bedrock	12,000	1,200	0.70	–
2. Sedimentary and foliated rock	4,000	400	0.35	–
3. Sandy gravel and/or gravel (GW and GP)	3,000	200	0.35	–
4. Sand, silty sand, clayey sand, silty gravel and clayey gravel (SW, SP, SM, SC, GM and GC)	2,000	150	0.25	–
5. Clay, sandy clay, silty clay, clayey silt, silt and sandy silt (CL, ML, MH and CH)	1,500[c]	100	–	130

For SI: 1 pound per square foot = 0.0479 kPa, 1 pound per square foot per foot = 0.157 kPa/m.

a. Coefficient to be multiplied by the dead load.
b. Lateral sliding resistance value to be multiplied by the contact area, as limited by Section 1804.3.
c. Where the building official determines that in-place soils with an allowable bearing capacity of less than 1,500 psf are likely to be present at the site, the allowable bearing capacity shall be determined by a soils investigation.
d. An increase of one-third is permitted when considering load combinations, including wind or earthquake loads, as permitted by Section 1605.3.2.

SOILS AND FOUNDATIONS (Cont'd)

Allowable Load-bearing Values of Soils (Comm 53)

TABLE 53–II

PRESUMPTIVE SOIL BEARING VALUES

Type of Soil	PSF
1. Wet soft clay; very loose silt; silty clay Verified method s. Comm 53.21 (1)	
2. Loose fine sand; medium clay; loose sandy clay soils	2,000
3. Stiff clay; firm inorganic silt	3,000
4. Medium (firm) sand; loose sandy gravel; firm sandy clay soils; hard dry clay	4,000
5. Dense sand and gravel; very compact mixture of clay, sand and gravel	6,000
6. Rock	12,000

(b) The presumed soil bearing values shall be confirmed by exploring the type of soil to a depth of at least 5 feet below the footings during or before construction. The designer shall submit a report of confirmation to the department upon request.

Alternate Standard for Shallow Post Foundation Allowable Soil Pressures approved!

Evaluation # 200271-A

ANSI/ASAE EP486.1 OCT00 for Shallow Post Foundation Design and Allowable Soil Pressures

- The alternate standard, ANSI/ASAE EP486.1 OCT00, for shallow post foundation design has been evaluated for compliance with certain structural requirements of the current **Wisconsin Commercial Building Code (WCBC), Chapters Comm 61-65.** Pursuant to s. Comm 61.61 the alternate standard is approved for use in the State of Wisconsin to satisfy the intent and the allowable load bearing values of soils of **IBC Section 1804** and acceptable standard of design in **IBC Section 2306.1**.

SOILS AND FOUNDATIONS

- Footings and Foundations (IBC Section 1805)
  - Depth of footings
    - Minimum of 12 inches below the undisturbed ground surface, or
    - For buildings greater than 400 Sq. Ft. area or 10 feet in height, below frost line

- **Footings and Foundations (IBC Section 1805)**

1805.3 Footings on or adjacent to slopes.

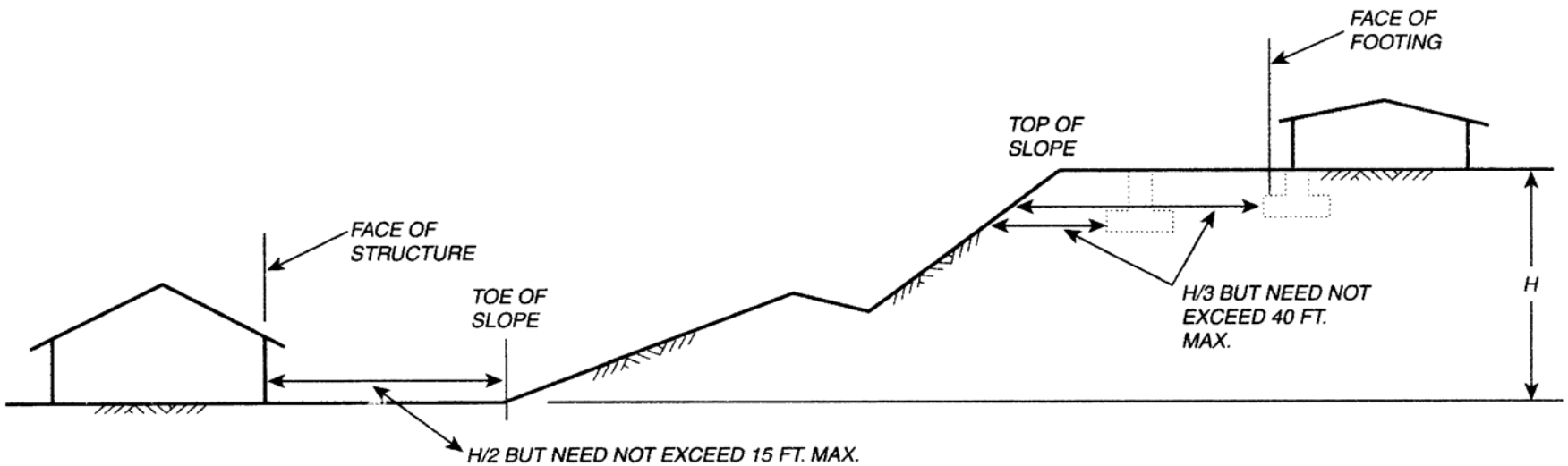

For SI: 1 inch = 25.4 mm.

FIGURE 1805.3.1
FOUNDATION CLEARANCES FROM SLOPES

SOILS AND FOUNDATIONS

- Concrete Footings (IBC Section 1805.4.2)
  - Must comply with sections 1805.4.2.1 through 1805.4.2.6 and provisions of Chapter 19
    - Exception - may use table 1805.4.2 for walls supporting light frame construction
  - Concrete shall have a min. specified compressive strength of 2,500 psi at 28 days.

TABLE 1805.4.2
FOOTINGS SUPPORTING WALLS OF LIGHT-FRAME CONSTRUCTION[a, b, c, d]

NUMBER OF FLOORS SUPPORTED BY THE FOUNDATION[e]	THICKNESS OF FOUNDATION WALL (inches)		WIDTH OF FOOTING (inches)	THICKNESS OF FOOTING (inches)	DEPTH OF FOOTING BELOW UNDISTURBED GROUND SURFACE (inches)
	Concrete	Unit masonry			
1	6	6	12	6	12
2	8	8	15	7	18
3	10	10	18	8	24

For SI: 1 inch = 25.4 mm.

a. Where frost conditions are found, footings and foundations shall be as required in Section 1805.2.1.

b. The ground under the floor is permitted to be excavated to the elevation of the top of the footing.

c. Interior-stud-bearing walls are permitted to be supported by isolated footings. The footing width and length shall be twice the width shown in this table, and footings shall be spaced not more than 6 feet on center.

d. See Section 1910 for additional requirements for footings of structures assigned to Seismic Design Categories C, D, E and F.

e. Foundations are permitted to support a roof in addition to the stipulated number of floors. Foundations supporting roofs only shall be as required for supporting one floor.

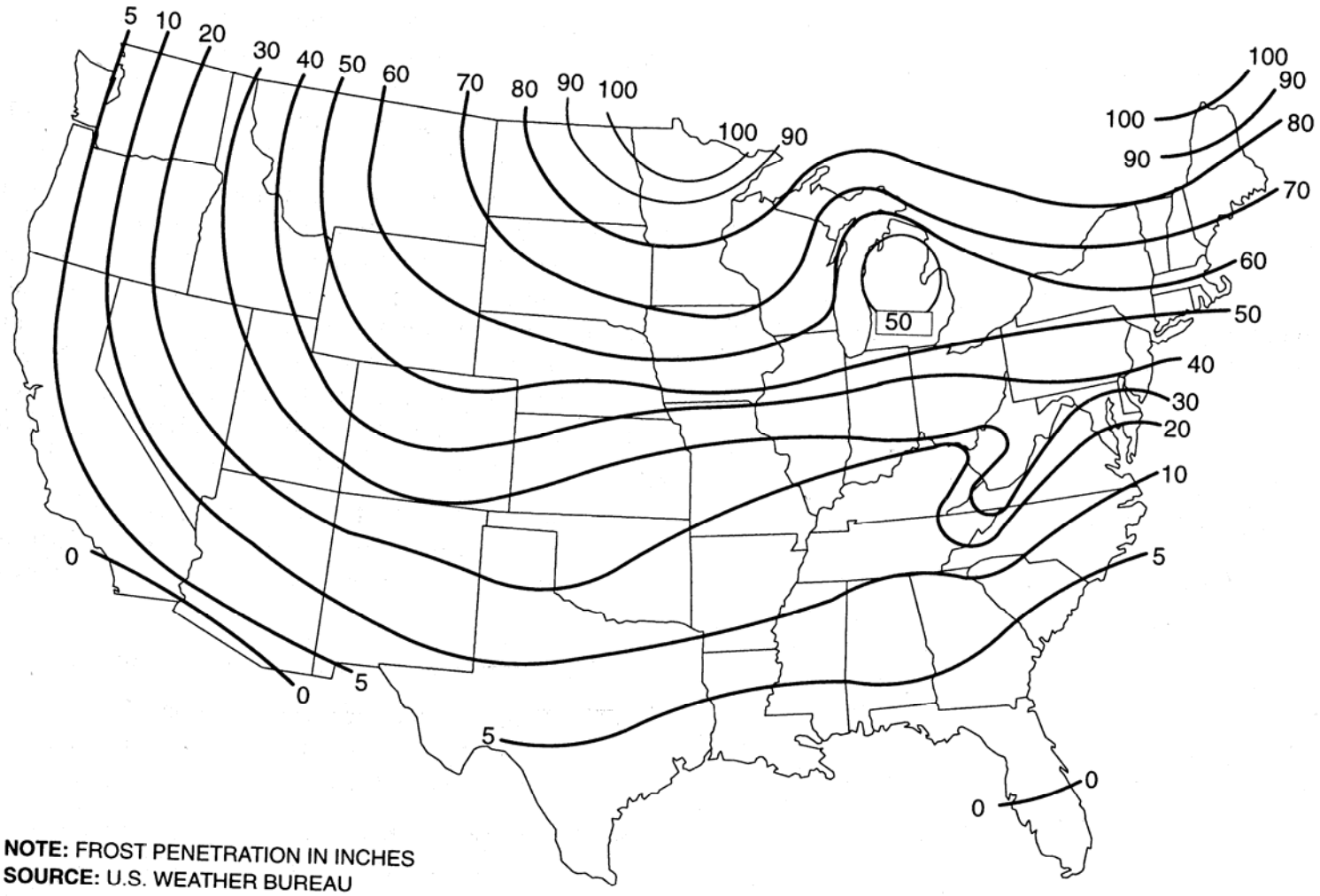

FROST PENETRATION DEPTHS

FIGURE 3

SOILS AND FOUNDATIONS

- Foundation walls - concrete and masonry (IBC Section 1805.5)
  - Foundation wall thickness
    - based on walls supported
    - based on soil loads, unbalanced backfill height and wall height
  - Foundation wall materials
  - Alternative foundation wall reinforcement
  - Hollow masonry wall
  - Wall drainage

SOILS AND FOUNDATIONS (cont'd)

- **Dampproofing and Waterproofing (IBC Section 1807)**
  - Where required. (IBC 1807.1)
    - Story above grade
    - Underfloor space
    - Ground -water control

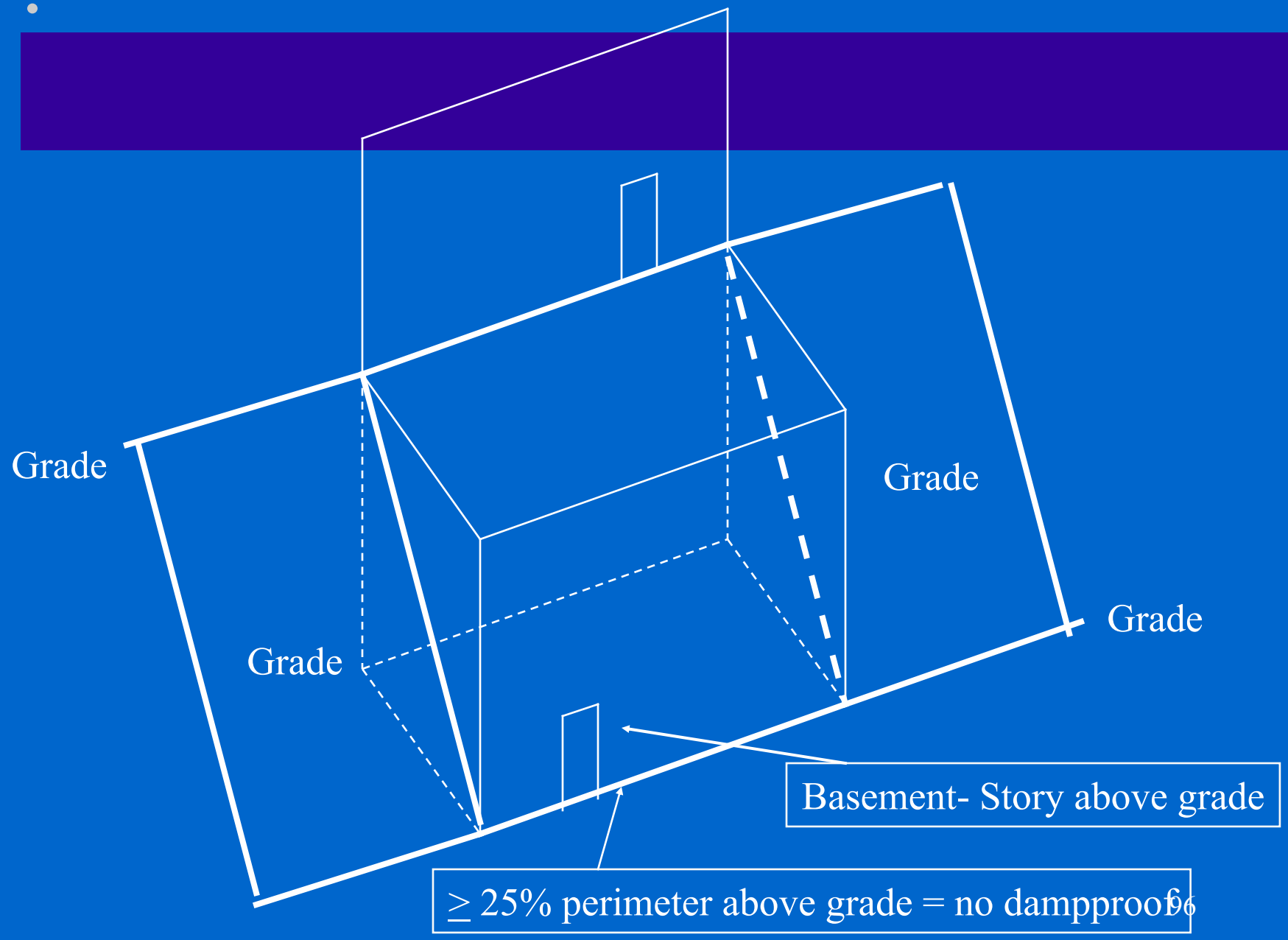
Grade
Grade
Grade
Grade
Basement- Story above grade
≥ 25% perimeter above grade = no dampproof

•Dampproofing and Waterproofing (Cont'd)

- Dampproofing required. (IBC 1807.2)
  - •Floors
  - •Walls
    - •Surface preparation of walls

•Dampproofing and Waterproofing (Cont'd)

- Waterproofing required. (IBC 1807.3)
  - •Floors
  - •Walls
    - •Surface preparation of walls
- Subsoil drainage system (IBC 1807.4)

•Pier and Pile Foundations

"Wisconsinisms" (cont'd) (Comm 62.1808)

For driven pile foundations, in the case of a sudden decrease in driving resistance, a reduced capacity may be applied in lieu of removing or rejecting the pile.

SOILS AND FOUNDATIONS (cont'd)

- **Pier and Pile Foundations (IBC Section 1808)**

"Wisconsinisms" (Comm 62.1808)

Added the terms "neutral plane" and "downdrag" and incorporated the terms in pile analysis.

Added the allowance that the capacity of a pile may be determined by load tests or by calculation.

ADDITIONAL RESOURCE DOCUMENTS

- 2000 IBC Handbook, Structural Provisions
  Available from ICBO - item #097H2K
  1-800-284-4406 or visit ww.icbo.org

- 2000 IBC Structural Q & A
  Available from ICBO - item #124S2K

- Questions and Guide to the Use of the Wind Load Provisions of ASCE 7-98/02/05
  Available from ASCE publications
  1-800-548-ASCE or visit www.pubs.asce.org

ADDITIONAL RESOURCE DOCUMENTS (cont'd)

- 2006 IBC Commentary - Volume II
  Available from ICC at www.iccsafe.org

- 2000 NEHRP (BSSC) - Recommended provisions for the Development of Seismic Regulations for New Buildings and Other Structures
  Available from FEMA - request FEMA 302 & 303
  1-800-480-2520 or visit www.bssconline.org

On behalf of the Wisconsin Department of Commerce, Safety and Buildings Division, I would like to thank you for your time. See you next week.

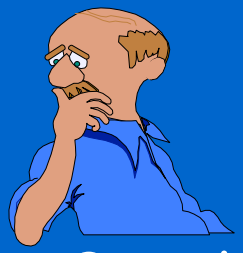

Any Questions?