SHELL CODES: 1-E8S06SD, 1-E8SECSD

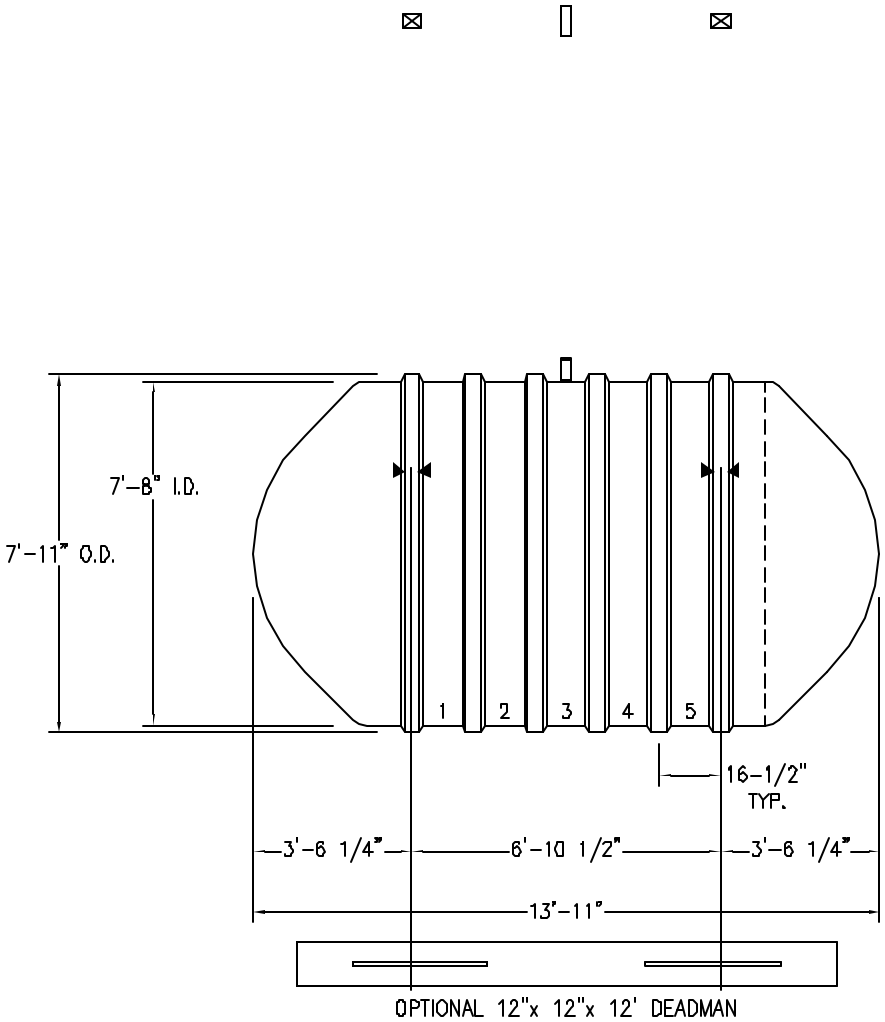

NOTES:

- ⊠ HOLD DOWN STRAP CLIP
- ▶◀ HOLD DOWN STRAP LOCATION
- ▯ TYPE "13" LIFT LUG – SD
- ▮ TYPE "13" LIFT LUG – HD

SWT G-6 (8')-4000		DATE: 8/1/2003
		DRAWN BY: K.A.SOEDER
CONTAINMENT SOLUTIONS	CAPACITY: 3,998	REVISED:
	WEIGHT: DRY/WET 1550	DWG NUMBER: 84SWG6