Delta Environmental Products™

Pentair Water

ECOPOD-D®

COMMERCIAL

FIXED FILM WASTEWATER TREATMENT SYSTEM
DESIGN MANUAL

P.O. BOX 969, DENHAM SPRINGS, LA 70727
(225) 665-6162 – Telephone
(225) 664-9467 – Fax
Revised 5/26/09

Pentair Water™

ECOPOD-D DESIGN WORKSHEET

Project: _____

Wastewater Strength

***Estimated Wastewater Average Daily Flow* = _____** GPD

Estimated Wastewater Loading at 300 mg/l BOD5

_____ GPD X _____ mg/l BOD5 X 8.34 / 1,000,000 = **_____lbs of BOD5/Day**

BOD loading Criteria for BIOPOD System based on NSF Testing per 500 gallons per day is rated for 300 mg/l.

Treatment Media

27 ft2/ft3 for 2' X 2' X 4' media block at 300 mg/l BOD5 load rating.
27 ft2/ft3 of treatment capacity per 500 GPD = 18.5 GPD per square foot
500 gals x 300mg/l X 8.34/1,000,000 = **1.25 lbs per day or 0.25 lbs per 100 gallons**

_____ LBS BOD 5 / 1.25 LBS BOD5 = _____ media blocks required – use ___ blocks

Reactor Tank Volume Criteria - *based on NSF testing per 500 gallons per day*

Total tank volume Average Daily Flow (ADF) X 1 - 1.4 = 500 -700 gallons = **24 to 33. 6 hours of detention at 500 per day**

_____ ADF X 1.4 factor = _____ gallons, use _____ gallons

Aeration Volume Criteria - *based on NSF Testing per 500 gallons per day*

12 CFM per 1.25 lbs BOD5 = 9.6 CFM per lb of BOD5

_____ LBS BOD5 x 9.6 CFM = _____ Total CFM

Weir Length Criteria - *based on 500 gallons per day NSF Testing*

2500 gallons per day per foot

_____ / 2500 gallons = _____ft chamber

Primary tank volume Criteria *- based on 500 gallons per day NSF Testing*

0.5 times minimum ADF to 1 times ADF maximum

_____ GPD X _____ = _____ gallons

Flow Equalization Volume – based on 25 to 50 percent of the daily average flow and timed controlled dosing

_____ADF X _____ = _____Flow Equalization Volume

*Requirement for flow equalization:

Disinfection Options

Not required

Pentair Water
Denham Springs Operations
PO Box 969
Denham Springs, LA 70727
225.665.6162 Tel
225.664.9467 Fax

Delta Environmental Products™
Pentair Water

ECOPOD – D COMMERCIAL DESIGN CRITERA

Project Name:_____

Wastewater Strength

Estimated Wastewater Average Daily Flow = _____ GPD

Estimated Wastewater Loading at _____ mg/l BOD5

_____ GPD X _____ mg/l BOD5 X 8.34 / 1,000,000 = **_____ lbs of BOD5/Day**

Model Selection is based on the anticipated project's influent BOD5 biological loading, not the project's estimated design flow in GPD

BOD loading criteria for ECOPOD commercial System based on NSF Testing per 500 gallons per day is rated for 300 mg/l.

MODEL	Maximum CBOD5 in lbs	Maximum Design Flow
E150D	**3.75 lbs**	**1,500 GPD**
E200D	**5 lbs**	**2,000 GPD**
E300D	**7.5 lbs**	**3,000 GPD**
E400D	**10 lbs**	**4,000 GPD**
E500D	**12.5 lbs**	**5,000 GPD**
E600D	**15 lbs**	**6,000 GPD**
E700D	**17.5 lbs**	**7,000 GPD**

MODEL	Maximum CBOD5 in lbs	Maximum Design Flow
E800D	20 lbs	8,000 GPD
E900D	22.5 lbs	9,000 GPD
E1000D	25 lbs	10,000 GPD
E1100D	27.5 lbs	11,000 GPD
E1200D	30 lbs	12,000 GPD
E1300D	33.5 lbs	13,000 GPD
E1400D	35 lbs	14,000 GPD
E1500D	37.5 lbs	15,000 GPD
E1600D	40 lbs	16,000 GPD
E1700D	42.5 lbs	17,000 GPD
E1800D	45 lbs	18,000 GPD
E1900D	47.5 lbs	19,000 GPD
E2000D	50 lbs	20,000 GPD

*** Sizing can be multiple units.**

Example: A 10,000 GPD application can use two (2) 5,000 ECOPOD – D units.

Reactor Tank Volume criteria - based on NSF testing per 500 gallons per day

MODEL	Reactor Volume	Reactor
E150D	2,200 gallons	3 media blocks
E200D	2,800 gallons	4 media blocks
E300D	4,200 gallons	6 media blocks
E400D	5,600 gallons	8 media blocks
E500D	7,000 gallons	10 media blocks
E600D	8,400 gallons	12 media blocks
E700D	9,800 gallons	14 media blocks

MODEL	Reactor Volume	Reactor
E800D	11,200 gallons	16 media blocks
E900D	12,600 gallons	18 media blocks
E1000D	14,000 gallons	20 media blocks
E1100D	15,400 gallons	22 media blocks
E1200D	16,800 gallons	24 media blocks
E1300D	18,200 gallons	26 media blocks
E1400D	19,600 gallons	28 media blocks
E1500D	21,000 gallons	30 media blocks
E1600D	22,400 gallons	32 media blocks
E1700D	23,800 gallons	34 media blocks
E1800D	25,200 gallons	36 media blocks
E2000D	28,000 gallons	40 media blocks

Aeration criteria - based on NSF Testing per 500 gallons per day

MODEL	CFM
E150D	36 CFM
E200D	48 CFM
E300D	72 CFM
E400D	96 CFM
E500D	120 CFM
E600D	144 CFM
E700D	168 CFM
E800D	192 CFM
E900D	216 CFM
E1000D	240 CFM
E1100D	264 CFM
E1200D	288 CFM
E1400D	336 CFM
E1500D	360 CFM

MODEL	CFM
E1600D	**384 CFM**
E1700D	**408 CFM**
E1800D	**432 CFM**
E1900D	**456 CFM**
E2000D	**480 CFM**

Weir Length criteria - ***based on 500 gallons per day NSF Testing***

MODEL	Length
E150D	**1’**
E200D	**1’**
E300D	**2’**
E400D	**2’**
E500D	**2.5’**
E600D	**3’**
E700D	**3.5’**
E800D	**4’**
E900D	**4.5’**
E1000D	**5’**
E1100D	**5.5’**
E1200D	**6’**
E1300D	**6.5’**
E1400D	**7’**
E1500D	**7.5’**
E1600D	**8’**
E1700D	**8.5’**
E1800D	**9’**
E1900D	**9.5 ‘**
E2000D	**10’**

Primary tank volume criteria - ***based on ½ to 1 times the ADF***

MODEL	Volume in Gallons
E200D	**1.000 to 2,000 gallons**
E300D	**1,500 to 3,000 gallons**
E400D	**2,000 to 4,000 gallons**
E500D	**2,500 to 5,000 gallons**
E600D	**3,000 to 6,000 gallons**
E700D	**3,500 to 7,000 gallons**
E800D	**4,000 to 8,000 gallons**
E900D	**4,500 to 9,000 gallons**
E1000D	**5,000 to 10,000 gallons**
E1100D	**5,500 to 11,000 gallons**
E1200D	**6.000 to 12,000 gallons**
E1300D	**6,500 to 13,000 gallons**
E1400D	**7,000 to 14,000 gallons**
E1500D	**7,500 to 15,000 gallons**
E1600D	**8,000 to 16,000 gallons**
E1700D	**8,500 to 17,000 gallons**
E1800D	**9,000 to 18,000 gallons**
E1900D	**9,500 to 19,000 gallons**
E2000D	**10,000 to 20,000 gallons**

Flow Equalization Volume – based on 25 to 50 percent of the daily average flow and timed controlled dosing

MODEL	Volume in Gallons
E200D	**500 to 1,000 gallons**
E300D	**750 to 1,500 gallons**
E400D	**1,000 to 2,000 gallons**
E500D	**1,250 to 2,500 gallons**
E600D	**1,500 to 3,000 gallons**
E700D	**1,750 to 3,500 gallons**
E800D	**2,000 to 4,000 gallons**
E900D	**2,250 to 4,500 gallons**
E1000D	**2,500 to 5,000 gallons**
E1100D	**2,750 to 5,500 gallons**
E1200D	**3,000 to 6,000 gallons**
E1300D	**3,250 to 6,500 gallons**
E1400D	**3,500 to 7,000 gallons**
E1500D	**3,750 to 7,500 gallons**
E1600D	**4,000 to 8,000 gallons**
E1700D	**4,250 to 8,500 gallons**
E1800D	**4,500 to 9,000 gallons**
E1900D	**4,750 to 9,500 gallons**
E2000D	**5,000 to 10,000 gallons**

Disinfection Options

Ultraviolet
Chlorination
De-chlorination

SPECIFICATIONS FOR
DELTA ENVIRONMENTAL PRODUCTS
ECOPOD® D Series COMMERCIAL
FIXED FILM WASTEWATER TREATMENT SYSTEM

MEETING ANSI/NSF INTERNATIONAL STANDARD 40, CLASS 1

GENERAL SPECIFICATIONS

The advanced wastewater treatment system described by these specifications is a Delta Environmental Products ECOPOD® Fixed Film Wastewater Treatment System Model D Series. This device shall essentially consist of a media container, engineered media, air diffusion system, specially designed discharge outlet tee, blower assembly, and control/alarm panel. Additional features and accessories are as shown on the Delta Environmental job drawing or drawings and as hereinafter specified and described. ECOPOD - D shall act in accordance with with ANSI/NSF International, Standard 40, Class 1

OPERATING CONDITIONS

The treatment system shall be capable of treating _____ gallons per day average daily flow (ADF) of domestic raw sewage waste with an organic loading of _____ pounds of BOD_5. A minimum of _____cubic feet of aeration capacity shall be provided for each pound of BOD_5.

CONSTRUCTION

Tanks

Primary, reactor and effluent tanks are to be State of Wisconsin approved concrete tanks.

Primary Tank

A primary tank shall be provided as shown on the plans to receive the incoming flow. The pretreatment tank shall provide ___ hours hydraulic detention at the ADF rate. The primary tank shall be designed to collect large incoming solids. This shall be accomplished by extending the inlet pipe downward below the trash floatable zone and above the settling zone. The discharge pipe shall also be extended downward so as to draw pretreated sewage from the median zone, keeping both floatable and settle-able solids out of the reactor tank.

Reactor/Dilution Tank

The reactor tank shall be sized to provide a minimum of 33.6 hour hydraulic detention time at the average daily flow (ADF). The dilution zone shall also be designed as to provide optimum liquid-solid separation and shall be sized to provide 24 hours hydraulic detention at the ADF rate.

Air Delivery System

Air delivery system shall be constructed of schedule 40 PVC pipe. Air ports shall be designed for non-clogging and shall be maintenance free.

INFLUENT PUMPS: Pump(s) shall be Aermotor T Super Series filtered effluent pumps selected in accordance with the following design criteria:

Number of Pumps:	___
Primary Design Flow:	___GPD
Primary Design Head:	___ Head
Minimum Shut-off Head:	___ Head
Motor Horsepower:	___ HP
Motor Speed:	___ RPM
Electrical:	___ Volt, ___ Phase

PUMP – The pump shall be designed to handle septic tank filtered effluent and be capable of passing 1/16 inch spherical solids. The pump shall be capable of handling liquids with temperatures to 140°F intermittent and shall be capable of running dry for short durations without damage to the motor or pump end.

MOTOR – The pump motor shall be of the submersible type rated ____ hp as required. Motor shall operate at _____ RPM and shall be for 115 volts (1/2 hp), 230 volts single phase, 60 cycles. Single-phase motors shall be of the split phase design type. Stator winding shall be hermetically sealed Class B insulation rated for 130°C maximum operating temperature. The winding housing will be filled with anti-track self healing resin to transfer heat from the windings to the outer shell. The motor assembly shall consist of a corrosion resistant exterior construction. The motor incorporates a biac starting switch which provides automatic torque reversal to aid starting in adverse environments and prevents fast cycling.

The motor shall be capable of operating over the full range of the performance curve without overloading the motor causing any objectionable noise or vibration. The motor shaft shall be of 400 series stainless steel and shall be heat shrunk into the die cast motor rotor. The motor shall have two bearings to support the rotor; an upper sleeve bearing to accommodate radial loads and a lower

Kingsbury bearing to take thrust loads. Bearings shall be designed for a B-10 file life of 50,000 hours.

POWER CORD – The motor power cord shall be SJOW. The cable jacket shall be sealed at the motor entrance by means of a rubber compression washer and compression nut. A molded rubber tube filled with epoxy shall seal the outer cable jacket and the individual leads to prevent water from entering the motor housing.

SHAFT SEAL – The motor shall be protected by a nitrile rubber lip shaft seal. The seal shall be protected by an acetal seal cover and nitrile rubber slinger.

PUMP IMPELLER – The pump impeller shall be of the six vane enclosed type. The impeller shall be constructed of engineered thermoplastic. A stainless steel wear ring shall be molded into the thermoplastic housing for the plastic impeller to provide a wear surface. The impeller shall have a hexagonal I.D. and be positively driven by a hexagonal 300 series stainless steel pump shaft.

PUMP AND MOTOR ASSEMBLY – The pump end shall consist of corrosion resistant 300 series stainless steel and thermoplastic. The motor construction is 300 series stainless steel, with a 400 series stainless steel shaft.

FASTENERS – All fasteners shall be of 400 series stainless steel.

ECOFILTER Pump Vaults

Delta Pump Vaults are used to filter effluent being pumped from septic tanks or separate dosing tanks in STEP systems to onsite wastewater treatment systems and to disposal systems. The ECOFILTER allows for the use of a high-head submersible turbine pump in these applications. Removes and maintains suspended solids in the septic tank. Can pump from a single compartment septic tank or a two-compartment septic tank where both compartments are simultaneously drawn down during pumping.

General

The Delta ECOFILTER Pump Vault includes molded polyethylene housing with an internal filter cartridge constructed of polypropylene and PVC. Schedule 80 PVC support pipes are included to suspend the vault in tank openings. The filter cartridge can be removed without pulling the pump or vault. Effluent enters through inlet hole on the ECOFILTER vault and flows through the screen to the pump chamber. The pump chamber inducer accommodates one or two pumps. The Delta ECOFILTER Pump Vaults are patent pending.

Filter pump vault must be 57” in height and be able to filter less than 1/8” solids.

Disinfection

A disinfection system of chorine or Ultraviolet light shall be included in the treatment system to achieve disinfection of the final effluent. Either the chlorinator or the Ultraviolet Light shall be manufactured by the wastewater treatment plant manufacturer.

Aeration Blower

Provide duplex aeration blower system with sufficient capacity to furnish the treatment units air requirements. The blower(s) shall be capable of delivering a minimum of 4,850 cubic feet per pound of BOD_5 influent at required discharge pressure. The blowers shall be regenerative type units capable of delivery sufficient aeration. Blowers shall be not be more than 68 dba at 5 feet.

Electrical Controls

GENERAL

Furnish an automatic PLC control panel to provide un-attended automatic operation of the system. The controller shall be completely assembled; wired and tested .The panel manufacturer shall be certified by Underwriters Laboratories, (U.L.) to manufacture U.L. 508A control panels and shall present their certification documentation with submittal drawings.

The control panel shall be enclosed in a NEMA 4X weather-proof fiberglass enclosure with an inner safety door to isolate all power components and protect the operator. A locking hasp shall be provided on the exterior of the enclosure. Each pump shall be provided with a circuit breaker and a magnetic starter with Class 10 ambient compensated overload relays. HOA selectors and run lights shall be provided for each pump. An alternating relay shall be provided to alternate pumps on successive cycles of operation. Provisions shall be made to provide simultaneous operation of both pumps on high demand. A terminal strip shall be provided to connect all float switches and remote pilot devices. All electrical devices shall be finger safe or have finger safe covers to prevent incidental contact with energized components. Only control panels with high quality individual industrial components with high withstand capability to power surges will be acceptable. Unitized printed circuit board type control panels will not be meet this specification.

SYSTEM FEATURES

The Delta Environmental Products 13000 Series professional series control panel utilizes a programmable logic controller (PLC) to automate all functions in a NEMA 4X hinged door enclosure.

The PLC provides:

- Influent pump control
- Multiple E200 Operation
- Adjustable override dosing times
- Accepts 2, 3, or 4 float arrangements
- Simplex and Duplex
- Multiple power circuits compatibility
- Override counter
- High level counter
- Switch to hand counter

SYSTEM OPERATION

The control panel contains a programmable logic controller (PLC) that periodically turns the influent pumps, located inside the flow equalization tank, on and off. The PLC is capable of time dosing each ECOPOD - D independently and at different time settings. The control panel is furnished with a Hand-Off-Auto switch located in the panel. The hand mode overrides the PLC timer so the pump can be manually turned on. When the level of water in the flow equalization tank is low, the pump float switch will be in the off position, disabling the pump. The control panel also contains a high level alarm that will sound if a high level is reached in the dose tank which may indicate a system malfunction.

The control panel contains a programmable logic controller (PLC) that manages the pumps and the ECOPOD - D air blowers. The CP13000 manages either a blower for each ECOPOD - D or one for all ECOPOD – D and can be operate a dual blower arrangement. The CP13000 has optional effluent pump circuit that operates simplex or duplex pumps, both on demand and timed dosed. The hand mode overrides the PLC timer so the pump can be manually turned on. When the level of water in the tanks is low, the pump float switch will be in the off position, disabling the pump. The control panel also contains a high level alarm that will sound if a high level is reached in the tanks which may indicate a system malfunction.

ENCLOSURE

The enclosure shall be NEMA 4X rated fiberglass and shall be equipped with an inner safety door.
The outer door shall be gasket. All pilot devices shall be mounted on the inner door. All power and control devices shall be mounted behind the inner safety door on a painted white steel or aluminum sub-panel.

TRANSFORMER

A control power transformer (CPT) with fused primary and secondary shall be provided to reduce the control voltage to a maximum of 120 VAC and shall be sized to meet all control requirements. Provide a transformer when the voltage is 3/208 VAC, 3/240 VAC, 3 wire and 3/480 VAC. Transformer may be deleted where a neutral is supplied to provide 120 VAC line to neutral voltage.

SINGLE PHASE MOTOR STARTING MODULES

Furnish when required by the pump manufacturer, all necessary start relay(s), start capacitor(s) and run capacitors(s) needed for the correct operation of single phase motors. All start/run components and circuits shall be compatible with the pump motor(s) being used. (Applies to single-phase control panels only.)

CIRCUIT BREAKERS

The power system shall contain two back panel mounted branch thermal magnetic motor circuit breakers. The protector operating mechanism shall be quick make, quick break and trip free.

MOTOR STARTERS

The motor starters shall be full voltage, non-reversing, horsepower rated with Class 10 ambient compensated overload relays and sized for the specified pumps. The overload relays shall contain an additional N.O. (normally open) contact to provide a crossover circuit enabling the opposite pump to run on an overload trip.

MOISTURE DETECTION

Where submersible pumps that have moisture detectors utilized, a moisture detection circuit shall be provided to sense moisture in the pump seals. A warning light inside the panel shall illuminate upon this condition, but shall not cause the pump to lockout. However where the moisture detector is internally connected in series with the over temperature detector, it shall stop the pump.

OVER TEMPERATURE PROTECTION

The panel shall be wired to connect an over temperature device in or on the pump that will activate on high temperature and stop the pump. The temperature device shall automatically reset when the temperature drops to normal.

OPTIONS [Engineer to make selections if any. List is from most common to least common]

The following options shall also be provided:

* Main disconnect switch accessible from inside panel.
* Lightning arrester to limit power surges.
* Elapsed time meters to record pump run times.
* Phase monitor to protect motors from phase failure (3 phase panels only)
* Duplex GFCI on outside of enclosure (120/240 single phase panels only)
* Remote alarm light instead of panel mounted.
* Stainless steel enclosure instead of fiberglass.
* Green run lights instead of red.
* NEMA rated starters
* High temperature lock out with manual reset push button for non-submersible pumps.
* Mounting pole, junction box, and seal below panel to prevent gases from entering panel.
* Intrinsically safe relays.
* Remote Monitor

Ultraviolet Disinfection Unit

Materials of Construction
Ultraviolet Disinfection System – An ultraviolet disinfection System shall be supplies complete and ready for operation in accordance with the specifications stated herein. The system shall be a horizontal Self Cleaning series type, Model Number TEII-UV-UF4. The system shall be designed to treat a total of 7,500 gallons per day The ultraviolet disinfection system shall be capable of meeting the fecal coliform limits set at 200 MPN / 100 ml monthly average, when operated in accordance with the manufactures operation and maintenance instructions. The system shall be designed for installation in a gravity flow effluent.

Quartz Gland Fitting- The quartz gland fittings shall be precision machined fitting.

UV Lamps - The ultraviolet disinfection unit shall utilize low pressure mercury germicidal lamps of instant start, hot cathode type using triple coiled filaments as cathodes. The filament construction uses nickel inner lead in a clamped filament design. Each lamp shall produce ultraviolet light with at least 90% of the emission within the wavelengths of 2537 Angstroms. The lamp shall be rated to produce

zero level ozone. The rated lifetime of the lamps shall be in excess of 8,500 hours.

Quartz Sleeves - The quartz sleeves are type 214 clear fused quartz and shall contain 99.9 percent Silicone Dioxide. The sleeve shall be rated for UV transmission of 95 percent and shall not be subject to solarization over the length of its life.

Inlet and Outlet Pipe - A 4 inch tube stainless steel outlet

Unit to be installed in concrete trough as shown on drawing

Piping

All necessary piping and valves inside the plant shall be PVC and be provided by the manufacturer. At the exterior wall of the plant, as shown on the plans, the manufacturer shall provide properly sized inlet and outlet connections. The manufacturer shall not be responsible for piping or valves outside the plant. Contractor or owner shall be responsible for necessary piping and valves between all systems.

Workmanship and Experience

All workmanship and materials shall be of the highest quality. The waste treatment plant shall be the product of an experienced manufacturer actively engaged in manufacturing and research and development of sewage treatment systems. NSF International test documents shall be available upon request of the Engineer.

SPECIFICATIONS

DELTA ENVIRONMENTAL PRODUCTS
CP 13000 SERIES

DUPLEX / ECOPOD PLC CONTROLLED
ELECTRICAL PANEL

GENERAL

Furnish an automatic PLC control panel to provide un-attended automatic operation of the system. The controller shall be completely assembled; wired and tested .The panel manufacturer shall be certified by Underwriters Laboratories, (U.L.) to manufacture U.L. 508A control panels and shall present their certification documentation with submittal drawings.

ELECTRICAL CONTROL PANEL

The control panel shall be enclosed in a Nema 4X weather-proof fiberglass enclosure with an inner safety door to isolate all power components and protect the operator. A locking hasp shall be provided on the exterior of the enclosure. Each pump shall be provided with a circuit breaker and a magnetic starter with Class 10 ambient compensated overload relays. HOA selectors and run lights shall be provided for each pump. An alternating relay shall be provided to alternate pumps on successive cycles of operation. Provisions shall be made to provide simultaneous operation of both pumps on high demand. A terminal strip shall be provided to connect all float switches and remote pilot devices. All electrical devices shall be finger safe or have finger safe covers to prevent incidental contact with energized components. Only control panels with high quality individual industrial components with high withstand capability to power surges will be acceptable. Unitized printed circuit board type control panels will not be meet this specification.

SYSTEM FEATURES

The Delta Environmental Products 13000 Series professional series control panel utilizes a programmable logic controller (PLC) to automate all functions in a NEMA 4X hinged door enclosure.

The PLC provides:

- Influent pump control
- Multiple E200 Operation

- Adjustable override dosing times
- Accepts 2, 3, or 4 float arrangements
- Simplex and Duplex
- Multiple power circuits compatibility
- Override counter
- High level counter
- Switch to hand counter

SYSTEM OPERATION

The control panel contains a programmable logic controller (PLC) that periodically turns the influent pumps, located inside the flow equalization tank, on and off. The PLC is capable of time dosing each E200 independently and at different time settings. The control panel is furnished with a Hand-Off-Auto switch located in the panel. The hand mode overrides the PLC timer so the pump can be manually turned on. When the level of water in the flow equalization tank is low, the pump float switch will be in the off position, disabling the pump. The control panel also contains a high level alarm that will sound if a high level is reached in the dose tank which may indicate a system malfunction.

The control panel contains a programmable logic controller (PLC) that manages the pumps and the E200 air blowers. The CP13000 manages either a blower for each E200 or one for all E200s and can be operate a dual blower arrangement. The CP13000 has optional effluent pump circuit that operates simplex or duplex pumps, both on demand and timed dosed. The hand mode overrides the PLC timer so the pump can be manually turned on. When the level of water in the tanks is low, the pump float switch will be in the off position, disabling the pump. The control panel also contains a high level alarm that will sound if a high level is reached in the tanks which may indicate a system malfunction.

ENCLOSURE

The enclosure shall be Nema 4X rated fiberglass and shall be equipped with an inner safety door. The outer door shall be gasketed. All pilot devices shall be mounted on the inner door. All power and control devices shall be mounted behind the inner safety door on a painted white steel or aluminum sub-panel.

TRANSFORMER

A control power transformer (CPT) with fused primary and secondary shall be provided to reduce the control voltage to a maximum of 120 VAC and shall be sized to meet all control requirements. Provide a transformer when the voltage is 3/208 VAC , 3/240 VAC, 3 wire and 3/480 VAC. Transformer may be deleted where a neutral is supplied to provide 120 VAC line to neutral voltage.

SINGLE PHASE MOTOR STARTING MODULES

Furnish when required by the pump manufacturer, all necessary start relay(s), start capacitor(s) and run capacitors(s) needed for the correct operation of single phase motors. All start/run components and circuits shall be compatible with the pump motor(s) being used. (Applies to single-phase control panels only.)

CIRCUIT BREAKERS

The power system shall contain two back panel mounted branch thermal magnetic motor circuit breakers. The protector operating mechanism shall be quick make, quick break and trip free.

MOTOR STARTERS

The motor starters shall be full voltage, non-reversing, horsepower rated with Class 10 ambient compensated overload relays and sized for the specified pumps. The overload relays shall contain an additional N.O. (normally open) contact to provide a crossover circuit enabling the opposite pump to run on an overload trip.

MOISTURE DETECTION

Where submersible pumps that have moisture detectors utilized, a moisture detection circuit shall be provided to sense moisture in the pump seals. A warning light inside the panel shall illuminate upon this condition, but shall not cause the pump to lockout. However where the moisture detector is internally connected in series with the over temperature detector, it shall stop the pump.

OVER TEMPERATURE PROTECTION

The panel shall be wired to connect an over temperature device in or on the pump that will activate on high temperature and stop the pump. The temperature device shall automatically reset when the temperature drops to normal.

OPTIONS [Engineer to make selections if any. List is from most common to least common]

The following options shall also be provided:

* Main disconnect switch accessible from inside panel.
* Lightning arrester to limit power surges.
* Elapsed time meters to record pump run times.
* Phase monitor to protect motors from phase failure (3 phase panels only)
* Duplex GFCI on outside of enclosure (120/240 single phase panels only)
* Remote alarm light instead of panel mounted.
* Stainless steel enclosure instead of fiberglass.
* Green run lights instead of red.
* NEMA rated starters
* High temperature lock out with manual reset push button for non-submersible pumps.
* Mounting pole, junction box, and seal below panel to prevent gases from entering panel.
* Intrinsically safe relays.
* Remote Monitor

SEASONAL USE GUIDELINES OF ECOPOD®- D FIXED FILM WASTEWATER TREATMENT SYSTEM

These guidelines are for conditions as outlined below and apply for systems that are not in use for periods of time indicated. Site conditions not covered by the following must be forwarded to Delta for recommended guidelines to meet the particular site conditions.

1. System not in use for more than one month and less than three months. Electrical power is left on.
   - Air blower is positioned on 24 hour timer and operated at least 6 hours per day

2. System not in use more than three months. Electrical power is turned off.
   - System is shut down
   - Contents of tanks pumped out
   - If high ground water is present, fill with clean water.
   - If no ground water is present, leave tank empty.

3. System not in use more than three months. Electrical power is on
   - Air blower is positioned on 24 timer and operated at least 6 hours per day; **OR**
   - Contents of tanks pumped out
   - If high ground water is present, fill with clean water.
   - Water is present, leave tank empty.

4. System not in use. Electrical power is turned off.
   - Remove all material and liquid from tank.
   - Turn off air pump.
   - If high ground water is present, fill with clean water.
   - If no ground water is present, leave tank empty.

UNDER NO CIRCUMSTANCES SHOULD THE AIR BLOWER BE TURNED OFF FOR MORE THAN A MONTH WITHOUT REMOVING TANK CONTENTS.

MODEL#	ECOPOD-D
TANK REACTOR VOLUME	3,200 EACH
MEDIA BLOCKS	24 EACH
MEDIA SURFACE AREA	FT2/FT3
WIER LENGTH FT.	2'
AIR CFM	
BLOWER MODEL #	
HP	
PSI	
BOD	31 LBS

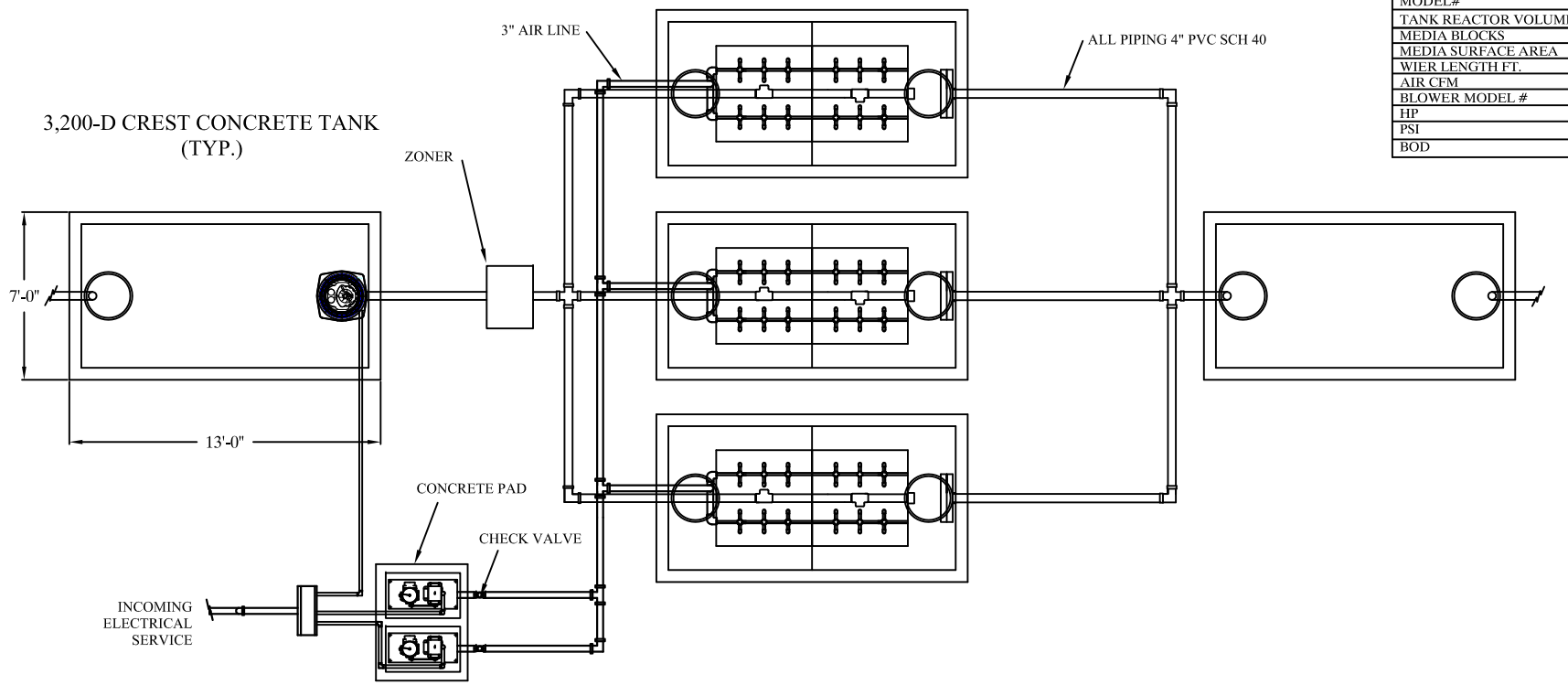

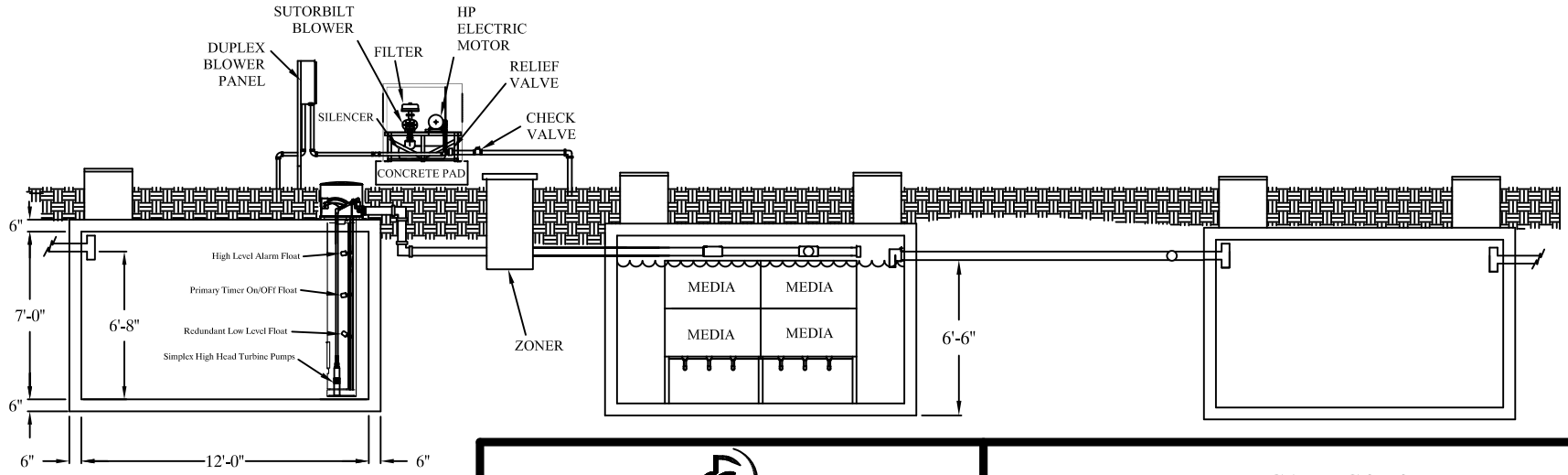

DELTA ENVIRONMENTAL PRODUCTS
P. O. BOX 969 DENHAM SPRINGS, LA 70727

TYPICAL ECOPOD-D

DWN BY:	DATE:	SCALE:	DWG. NO.:
D.WRIGHT	08/31/09	N.T.S.	

MODEL#	ECOPOD-D 3.2HS
TANK REACTOR VOLUME	5,000 GALLONS
MEDIA BLOCKS	9
MEDIA SURFACE AREA	243 FT2/FT3
WIER LENGTH FT.	2'
AIR CFM	106 CFM
BLOWER MODEL #	3L
HP	2 HP
PSI	2 PSI
BOD	11.25 LBS

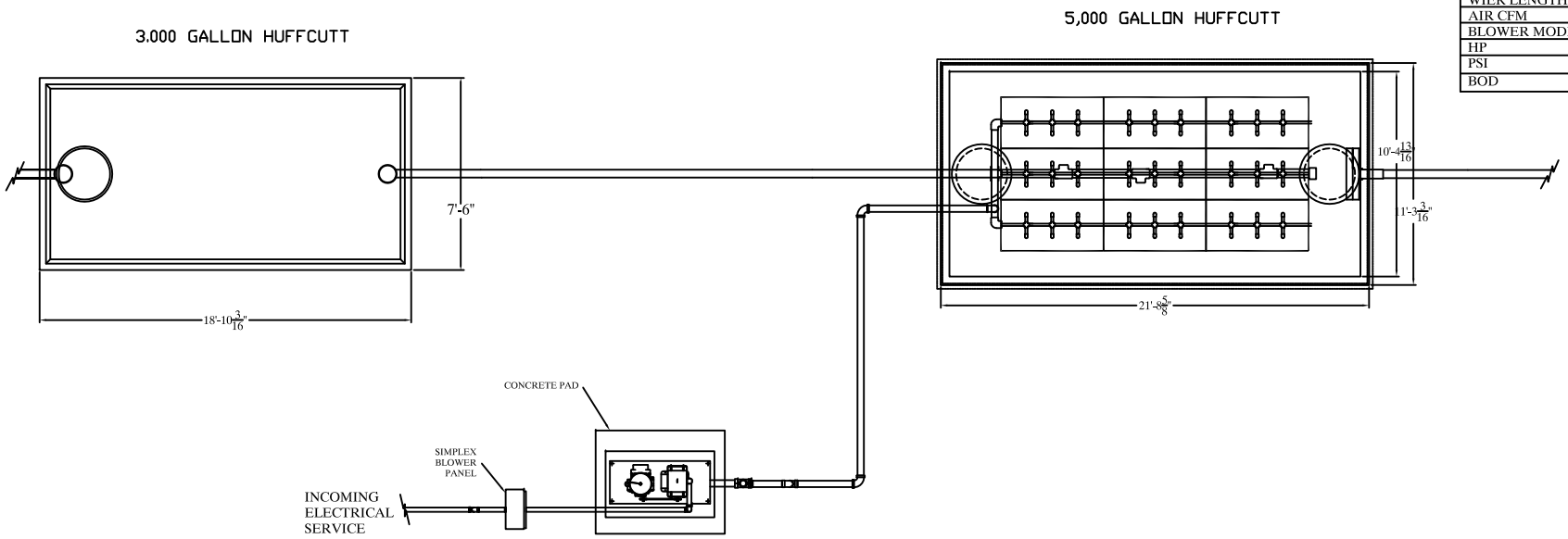

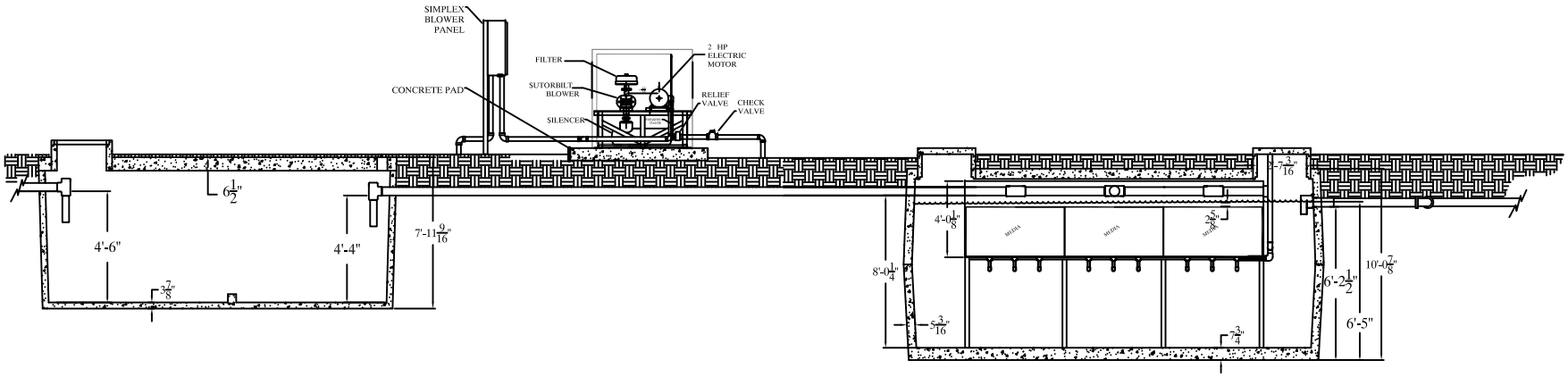

DELTA ENVIRONMENTAL PRODUCTS
P. O. BOX 969 DENHAM SPRINGS, LA 70727

TYPICAL ECOPOD-D

DWN BY:	DATE:	SCALE:	DWG. NO.:
D.WRIGHT	09/08/09	N.T.S.	

MODEL#	B-3.5 HS
TANK REACTOR VOLUME	5,213 EACH
MEDIA BLOCKS	9 EACH
MEDIA SURFACE AREA	243 FT2/FT3
WIER LENGTH FT.	2'
AIR CFM	108 CFM
BLOWER MODEL #	3L
HP	2.0
PSI	1.5
BOD	11.25 LBS

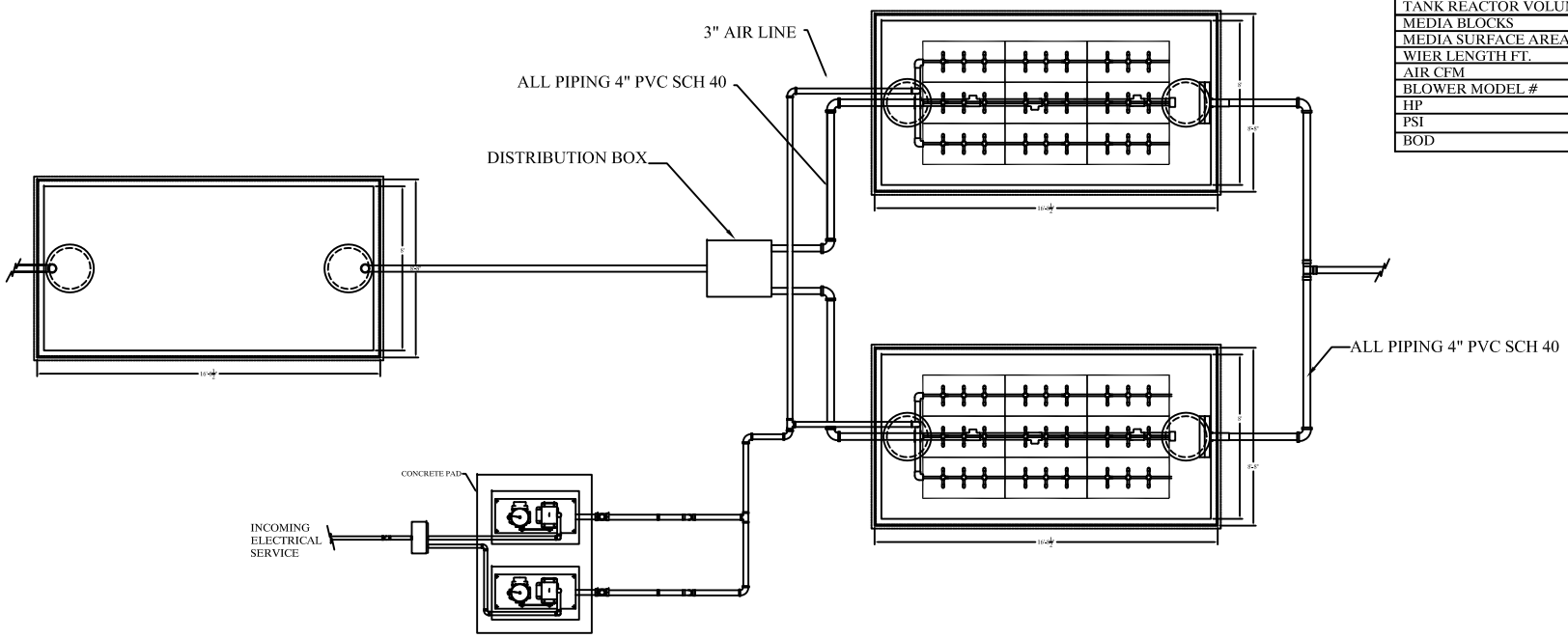

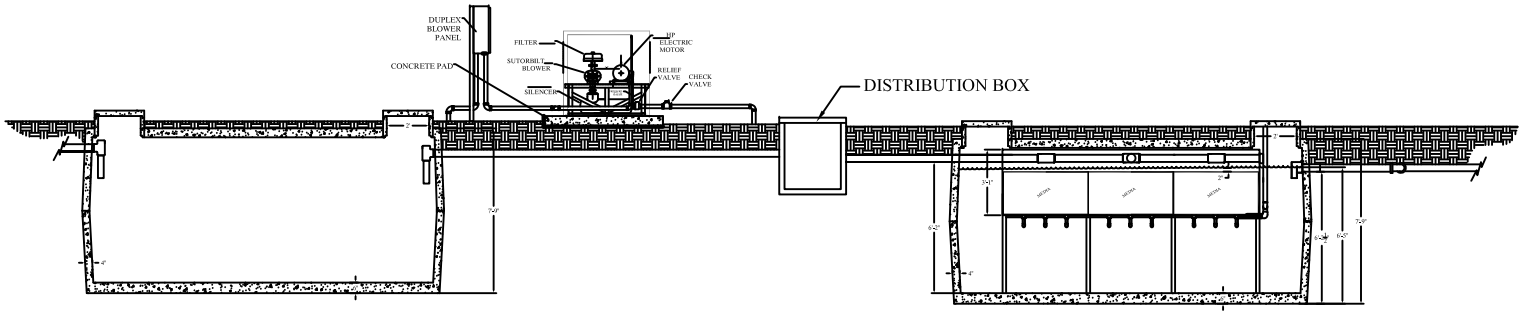

DELTA ENVIRONMENTAL PRODUCTS
P. O. BOX 969 DENHAM SPRINGS, LA 70727

TYPICAL ECOPOD-D

DWN BY:	DATE:	SCALE:	DWG. NO.:
C.RACHAL	4/02/09	N.T.S.	HECKEL'S BIOPOD 3.5 HS LAYOUT

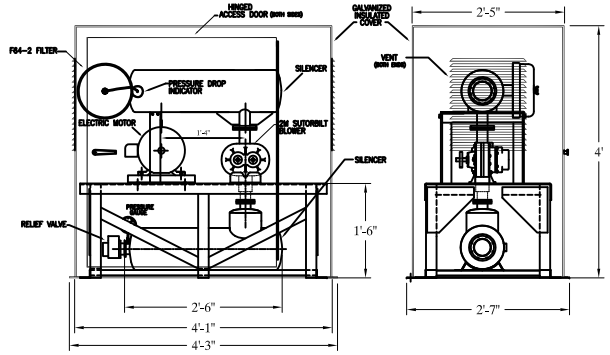

BLOWER PACKAGE

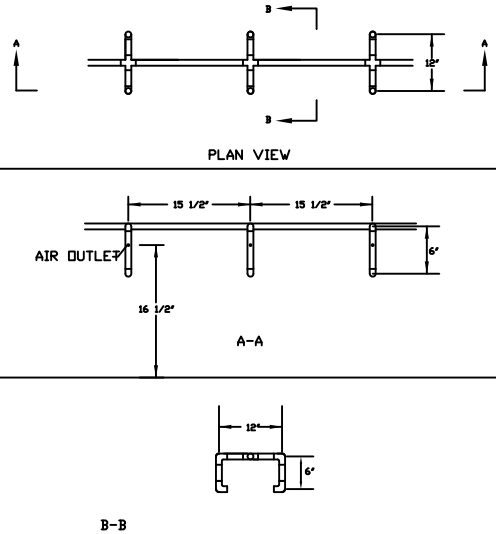

BIOPOD PIPING DETAIL

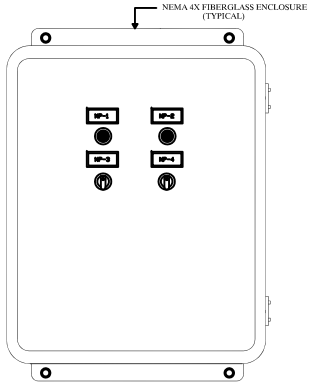

TYPICAL ENCLOSURE

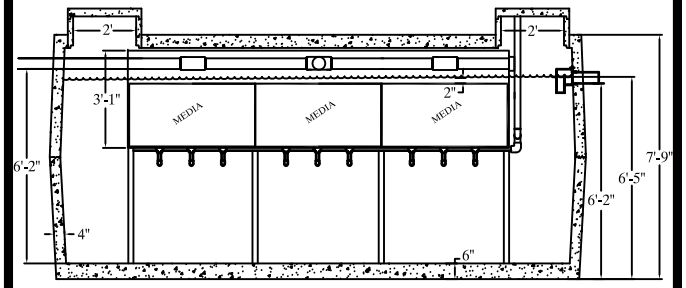

ECOPOD-D UNIT

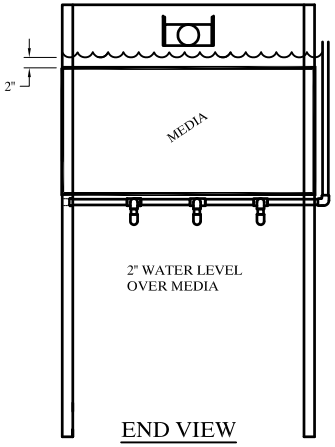

END VIEW

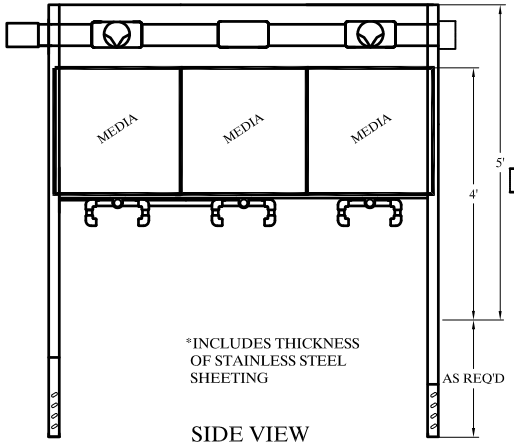

SIDE VIEW

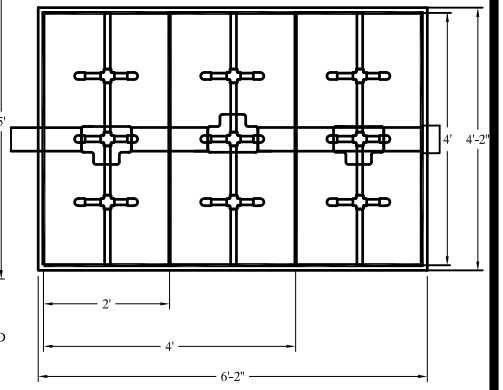

TOP VIEW

DELTA ENVIRONMENTAL PRODUCTS
P. O. BOX 969 DENHAM SPRINGS, LA 70727

ECOPOD COMMERCIAL STANDARD DETAILS

DWN BY:	DATE:	SCALE:	DWG. NO.:
C.RACHAL	12.15.08	N.T.S.	ECOPOP Commercial Standard Details

Operations and Maintenance Manual

For ECOPOD - D Wastewater Treatment Systems for:

_____

Delta Environmental Products
8275 Florida Blvd., Denham Springs, LA 70726
(225) 665-6162

THE PLANT SHOULD NOT BE PLACED IN SERVICE UNTIL THE MANUFACTURER'S MANUAL HAS BEEN READ AND UNDERSTOOD. Additional technical assistance, if needed, may be provided by the manufacturer, local regulatory agencies or an operations and maintenance services firm. During normal operation the ECOPOD blowers will run 24 hours a day, 7 days a week. A 24 hour timer with 15 minute increments is furnished to operate the blowers for troubleshooting purposes only. After the ECOPOD has been properly installed and the initial start-up/service inspection has been completed, the unit is ready to receive wastewater.
Consult factory before activating time clocks.

Metal, fiberglass and concrete are the three most common materials used in the manufacture of ECOPOD plant. The ECOPOD Wastewater treatment plant must be installed level to work properly. Steel and fiberglass plants are usually placed on a level concrete pad that extends horizontally at least one foot in all directions beyond the base of the plant; a concrete plant is usually set on a damp well compacted, level sand bed. In all cases, the possibility of settling must be avoided.

The ECOPOD Wastewater treatment plant for the facility has been constructed using pre-cast concrete tanks supplied by others and components either manufactured by or supplied Delta Environmental Products. Delta will provide;

- A complete list of all replacement parts, including name of manufacturer and part numbers
- Operating instructions
- Maintenance instructions
- Wiring diagrams
- Troubleshooting procedures
- As built drawings of the ECOPOD system

Major components of the BIOPOD

The ECOPOD Treatment System consists of the following components:

- Two (2) _____ gallon primary tanks, Hartford concrete, one with a commercial effluent filter with duplex ½ hp _____V, _____ Phase submersible sewer pumps controlled by a programmable timer.
- Four (4) _____ gallon reactor tanks, Hartford concrete, with four (4) _____ ECOPOD reactors.

- One (1) _____ gallon effluent dosing tank, Hartford concrete, containing duplex ½ hp _____ V, _____ Phase submersible effluent pumps controlled by on demand dose float switches.
- Two (2) Sutorbilt _____ blowers with 3 hp _____ V, _____ Phase induction electric motors.

- One (1) NEMA 4X duplex control panel with circuit breakers, magnetic starters, relays, 24 hour timer, and elapsed time meters to operate and monitor blowers and pump required for the system.

Primary Chamber Treatment Tank

The raw wastewater flows into the primary tanks for digestion of biological material and separation by gravity of non-biodegradable components. The primary chamber is a key part of the fixed film treatment plant where bacteria and other microorganisms thrive and multiply as they consume the food (organic material) in the wastewater. The biological process occurring in the primary chamber is anaerobic, the bacteria and other microorganisms are essential to the process; these microorganisms do not need air or dissolved oxygen to survive. The food and water needed by the microorganisms is supplied by the wastewater, the food being the organic matter in the wastewater.

The primary treated wastewater is then transferred to the four (4) BIOPODS by the submersible pumps, these pumps alternate each cycle. The primary treated effluent is pumped through a four (4) inch manifold with ¾ inch non-clog orifices utilized to balance the flow equally across the four (4) reactor chambers. The controller shall be set to deliver two (2) doses per hour, 200 gallons per dose. The controller can be adjusted to deliver a maximum of four (4) doses per hour.

- The flow control switches are to be set as follows;
    - Pump off float – 36” from the bottom of tank
    - Timer enable float – 48” from the bottom of tank
    - High water alarm float – 60” from the bottom of tank, recommended, set per state code

- Float switch operation should be verified every month by manually operating (lifting) each float switch and observing pumps for proper operation.

- Elapsed time meters are provided to ensure both pumps are operating equally. If the run time for one pump indicates that pump is running more than the other, the operator needs to check the pumps, floats, and controls to determine and correct the problem.

- Sludge levels are to be checked every six (6) months. When the sludge reaches 24” in depth, as measured from the bottom of the tank, the primary tank should be pump out.

- The effluent filter should be pulled and visually inspected every six (6) months, clean as needed.

- Visually inspect flow going into each reactor chambers every six (6) months. Should a reduction in flow be noticed, remove and clean ¾ inch orifice for that reactor. Orifices may be removed by disconnecting the unions on each end, use hose to wash out any obstruction.

Reactor Tank

After raw wastewater flows through the various devices where pretreatment occurs, it is pumped into the reactor tank/chamber and flows by gravity downward through the media and is re-circulated by the air entering below the media. The reactor chamber is the key part of the treatment system; where bacteria and other aerobic microorganisms attach to the media, thrive, multiply and consuming the food (organic material) in the wastewater. This biological process requires air/dissolved oxygen in order for the bacteria and other microorganisms to survive and thrive. The dissolved oxygen is supplied by pumping air through the air distribution system and allowing it to rise through the mead.

The reactor tank/chamber also houses the clarifier where the microorganisms are allowed to settle, there by producing a clear effluent to be discharged to final disposal.

The reactor tank must be visually inspected monthly.

- Observation should be made for clarity of effluent, floatable solids on the surface, and to ensure proper aeration is occurring.

- Olfactory test (sniff) for odors.

- Sludge levels are to be checked every six (6) months. When sludge reaches 24" in depth, as measured from the bottom of the tank, reactor tanks should be pump out.

BLOWERS AND MOTORS

Blower maintenance such as changing oil and grease is important to successful operation.

- **See attached blower manufacturer's operation and maintenance manual.**

An air filter is attached to the intake of the blower. This filter may be of the disposable type (paper) or permanent (wire mesh), in either case they must be kept clean for maximum blower life and output.

- **See attached blower manufacturer's operation and maintenance manual.**

A check valve on the blower discharge piping is provided to prevent water from entering the drop pipe when the blower is off. This unit has duplex alternating blowers with a common manifold; a check valve must be located between the blower outlets and the

common manifold to prevent the blower that is not in operation from having a vacuum created on it, causing a backward rotation resulting in damage.

- If backward rotation is noticed, disassembly the check valve/valves and check for proper operation or replace with a new valve.

- If water is present, in or around the blower, disassemble the check valve/valves and check for proper operation or replace with a new valve.

An electric motor is used to power the blower with V-belts transferring power from the motor to the blower. Bearings and belts may be damaged by over-tightening the V-belts;

- Grease fittings provided on electrical motors monthly.

- The operator should be able to depress the V-belt approximately one (1) inch at the midpoint between the blower and motor for a properly tensioned belt, adjust as needed, replace as required.

- If two (2) V-belts connect the blower and motor and one becomes damaged, both should be replaced.

Dosing Tank

The dosing tank consists of duplex submersible pumps for transferring the treated wastewater to final disposal.

- The flow control switches are to be set as follows;
    - Pump off float – ____" from bottom of tank
    - Pump on float – ___" from the bottom of tank, recommended, set per state code
    - Lag Pump on float – ____" from the bottom of tank, recommended, set per state code
    - High water alarm float – ___" from the bottom of tank, recommended, set per state code

- Float operation should be inspected every month by manually operating (lifting) each float switch and observing for proper pump operation.

- Elapsed time meters are provided to ensure both pumps are operating equally. If the run time for one pump indicates that pump is running more than the other, the operator needs to check the pumps, floats, and controls to determine and correct the problem.

- Sludge levels are to be checked every six (6) months. When sludge reaches 24" in depth as measured from the bottom of the tank, dose tanks should be pump out.

- The effluent filter should be pulled and visually inspected every six (6) months, clean as needed.

Electrical Controls

Electrical controls panel should visually inspected during every plant inspection for proper operation of blowers and pumps as well as signs of physical damage. The ECOPOD blower operates 24 hours a day, 7 days a week. The blowers operate on an alternator which switches each blower every 12 hours. Elapsed time meters are provided to ensure both blowers are operating equally.

- Check and record elapsed time for blowers and pumps.
- Manually activate the audible and visual alarm functions.

Sludge Removal

When sludge is remove by pump truck. Sludge removal is performed by placing a pump or hose from the pump truck at the bottom of the tanks until all of the sludge is removed.

Maintenance Equipment/Tools

Most large wastewater treatment plants are operated by trained individuals who use sophisticated equipment and procedures. Smaller plants are usually operated by personnel have limited training and use elementary testing procedures and simple equipment. Nonetheless, smaller plants *can* be operated successfully. Parameters that can be monitored easily and that give a good picture of the treatment plant's condition are:

- Settle ability
- pH
- Color
- Dissolved oxygen

Required test equipment includes: 3-gal plastic sample bucket with rope, DO test kit; pH test kit; two calibrated quart jars; and elbow-length rubber gloves.

Weekly items to be checked for proper mechanical and electrical operation

Item	Week 1	Week 2	Week 3	Week 4	Week 5
Visually Inspect Control Panel Operation					
Visually Inspect Air Blowers Operation					
Visually Inspect Optional Influent/Effluent Pump Operation					

Monthly Maintenance:

Grease and check oil level in plant air blowers.
Check and clean air filters.
Clean up any debris that may be caught in the dilution zone and on weir overflow trough.
Check blower belts tension.

Bi-Annual Maintenance:

Check sludge levels in primary tanks and dilution tank.

Annual Maintenance:

Change oil in air blowers and replace air filters and blower belts.

ECOPODLABOR TIME ESTIMATES FOR OPERATION & MAINTENANCE

Weekly items to be checked for proper mechanical and electrical operation

Item	Weekly
Visually Inspect Control Panel Operation	**30 Minutes**
Visually Inspect Air Blowers Operation	
Visually Inspect Optional Influent/Effluent Pump Operation	

Monthly Maintenance: 2 hours

Grease and check oil level in plant air blowers.
Check and clean air filters.
Clean up any debris that may be caught in the dilution zone and on weir overflow trough.
Check blower belts tension.

Bi-Annual Maintenance: 1 hour

Check sludge levels in primary tanks and dilution tank.

Annual Maintenance: 4 hours

Change oil in air blowers and replace air filters and blower belts.

Estimated Pump-Out Schedule:

Waste 10% of total volume, once a year.
i.e. 9,000 gallons total volume = 900 gallons pump-out sludge, annually.

ECOPODEQUIPMENT REPLACEMENT

ECOPODUNIT PER 9,000 GALLONS:

B-9.0:
2 (Two) – 2 HP, TEFC, __ Phase Motor .....$325.00 each
2 (Two) – Sutorbuilt, 3M Rotary Blower .....$1,425.00 each
2 (Two) – Filter Stoddard F64-2 Filter.....$ 85.00 each
2 (Two) – Set of Belts .....$40.00 each

CTF 284 Duplex Blower Panel:
6 (Six) - Fuse-FNQ-R-1/2.....$20.00 each
6 (Six) - Fuse-BAF-2 .....$4.00 each
6 (Six) - Fuse-GMA-2.....$2.00 each
1 (One) - Phase Monitor-PLMU-11 .....$70.00 each
1 (One) Clock-FM-1 STUZL.....$40.00 each
2 (Two) 3 HP Motor Starters .....$150.00 each
2 (Two) 3 HP Overloads .....$50.00 each
Optional Equipment:
2 (Two) – UV light bulbs model #1016.....$150.00 each
4 (Four) – Mercury Float Switches.....$25.00 each
2 (Two) – Surge Influent 2" Pumps.....$425.00 each
2 (Two) – Dosing Effluent Pumps .....$425.00 each
2 (Two) – ½ HP High-Head Turbine Pumps .....$225.00 each

Equipment Life Cycle Based Upon Proper Operation & Maintenance:

B-9.0:
1 (One) – 2 HP, TEFC, __ Phase Motor .....10 Years
1 (One) – Sutorbuilt, 3M Rotary Blower .....20 Years
2 (Two) – Filter Stoddard F64-2 Filter.....1 Year
1 (One) – Set of Belts .....1 Year

CTF 284 Duplex Blower Panel:
6 (Six) - Fuse-FNQ-R-1/2.....1 Year
6 (Six) - Fuse-BAF-2 .....1 Year
6 (Six) - Fuse-GMA-2.....1 Year
1 (One) - Phase Monitor-PLMU-11 .....10 Year
1 (One) Clock-FM-1 STUZL.....5 Years
2 (Two) 3 HP Motor Starters .....20 Years
2 (Two) 3 HP Overloads .....10 Years

Optional Equipment:
2 (Two) – UV light bulbs model #1016.....2 Years
4 (Four) – Mercury Float Switches.....5 Years
2 (Two) – Surge Influent 2" Pumps.....5 Years
2 (Two) – Dosing Effluent Pumps .....5 Years
2 (Two) – ½ HP High-Head Turbine Pumps ..... 5 Years