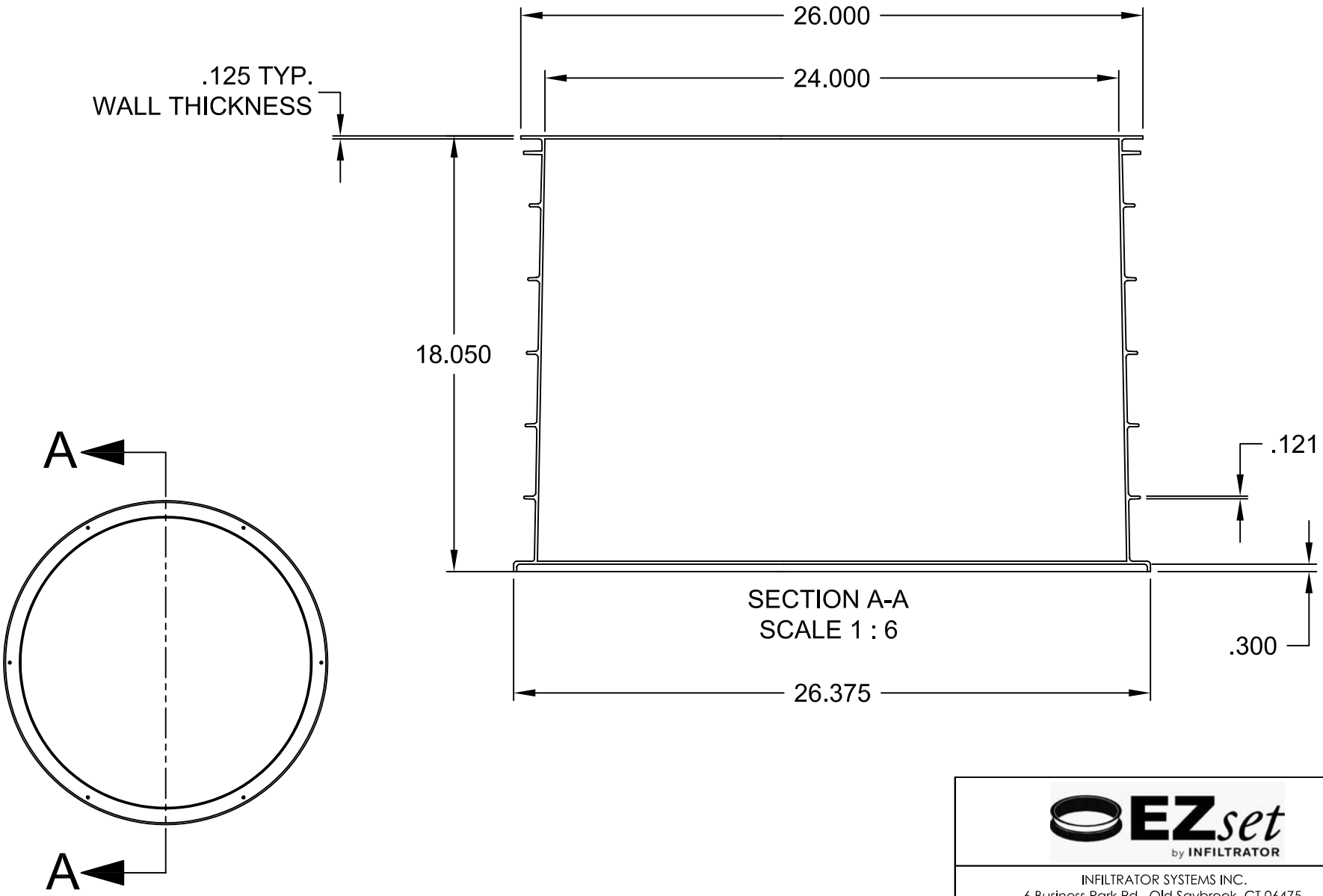

EZset by INFILTRATOR

INFILTRATOR SYSTEMS INC.
6 Business Park Rd. Old Saybrook, CT 06475
(800) 221-4436

EZ-SET 24 INCHES WIDE BY 18 INCHES HIGH TANK RISER

Drawn by: RWD	DWG NO. 1	Date: 12-16-09
SCALE NOT TO SCALE	Checked by: DFH	SHEET 1 of 1

Q:Tech Resources New/ISI Products/Tanks/EZ-Set/24w_x_18h riser