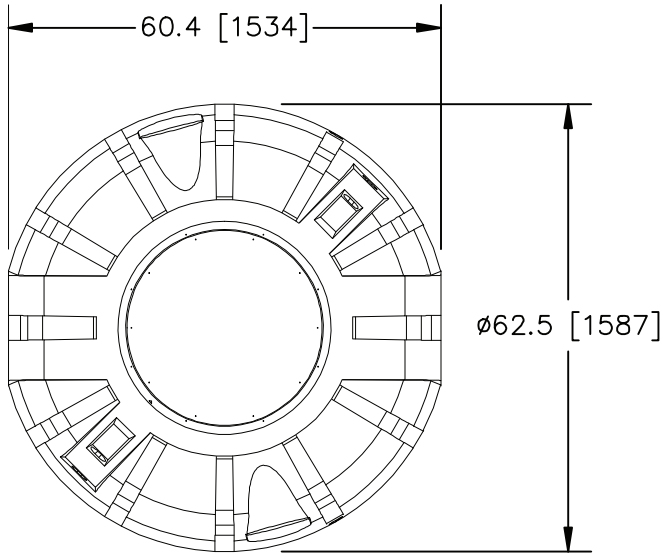

PLAN

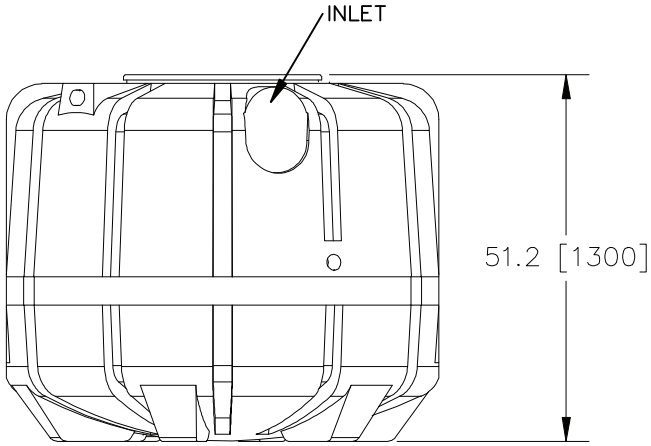

PROFILE

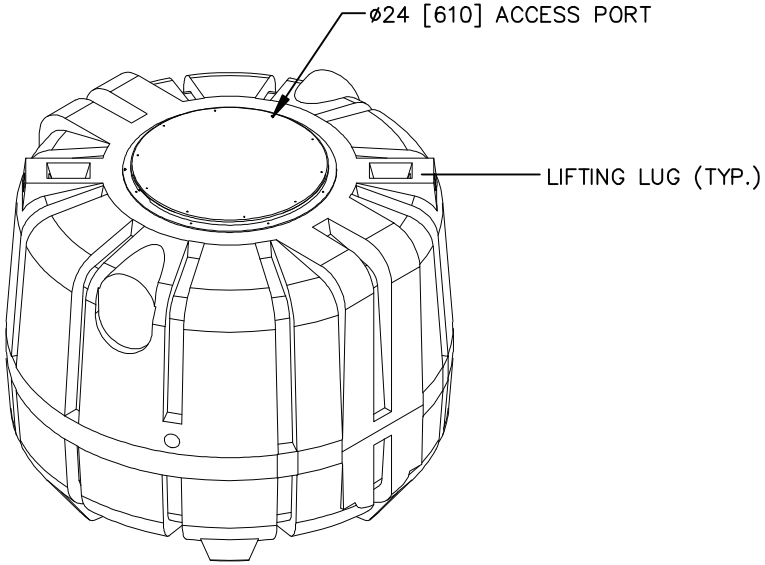

PARAMETER	UNITS U.S. [METRIC]	VALUE
EFFECTIVE(TOTAL) CAPACITY	gal [L]	503 [1,904]
ACCESS PORT AREA	in^2 [m^2]	452 [0.29]

Notes:
1. TANK MARKINGS WILL INCLUDE: MANUFACTURER NAME, LIQUID CAPACITY, MANUFACTURE DATE, MAXIMUM BURIAL DEPTH, AND STATE DESIGNATED APPROVAL NUMBER.
2. EXTERIOR OF MANHOLE COVER INCLUDES THE FOLLOWING WARNING: "DANGER DO NOT ENTER POISON GASES" WRITTEN IN ENGLISH, FRENCH, AND SPANISH.
3. MAXIMUM BURIAL DEPTH IS 48 IN [1,219 MM].
4. DIMENSIONS ON DRAWING SHOWN IN INCHES [MILLIMETERS].
5. NOMINAL WALL THICKNESS IS 0.7 INCHES [18 MILLIMETERS].

INFILTRATOR® septic tanks

INFILTRATOR SYSTEMS INC.
6 Business Park Rd. Old Saybrook, CT 06475
(800) 221-4436

TW-500
PUMP/SIPHON TANK CONFIGURATION

Drawn by: M.B.	DWG NO. 1	Date: 1-28-10
SCALE Not to Scale	Checked by: DL	SHEET 1 of 1

Q:TECH RES NEW/PRODUCTS/TANK/Generic model specific dwgs/TW-500 Jan28_2010_1.dwg