IRON CITY ENTERPRISES
2000 GAL SEPTIC/PUMP

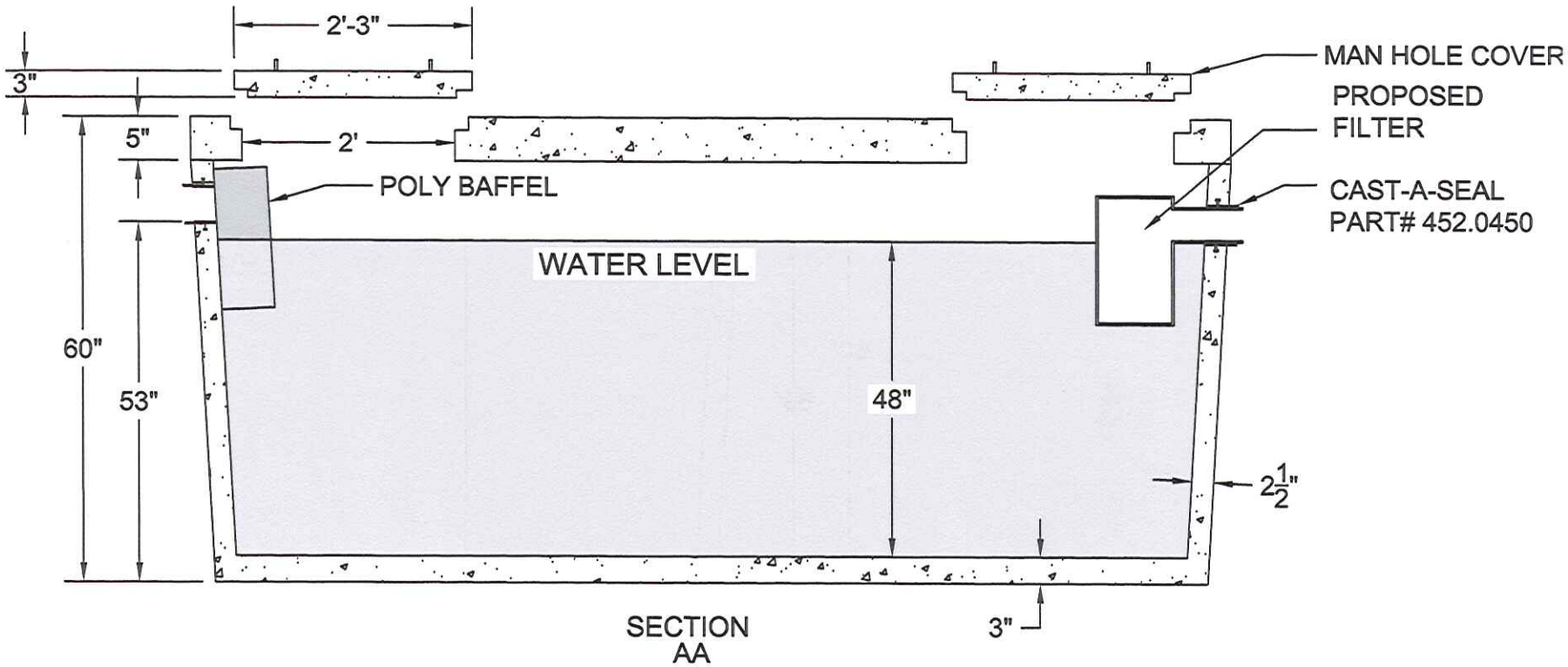

Proper bedding/Backfilling-
-Tanks need to be properly bed with adequate sand or sewer stone capable of bearing the weight of the tank and all of its contents. There must be at least 3" of sand between the tank and bed rock.
-Tanks need to be back filled with a sandy material with minimal clay and no large rocks
-Tank need to be buried with a minimum of 6" of coverage over the tank and maximum of 3' over the tank
-41 gallons equal 1 vertical inch

20100422A

IRON CITY ENTERPRISES
2000 GAL SEPTIC/PUMP

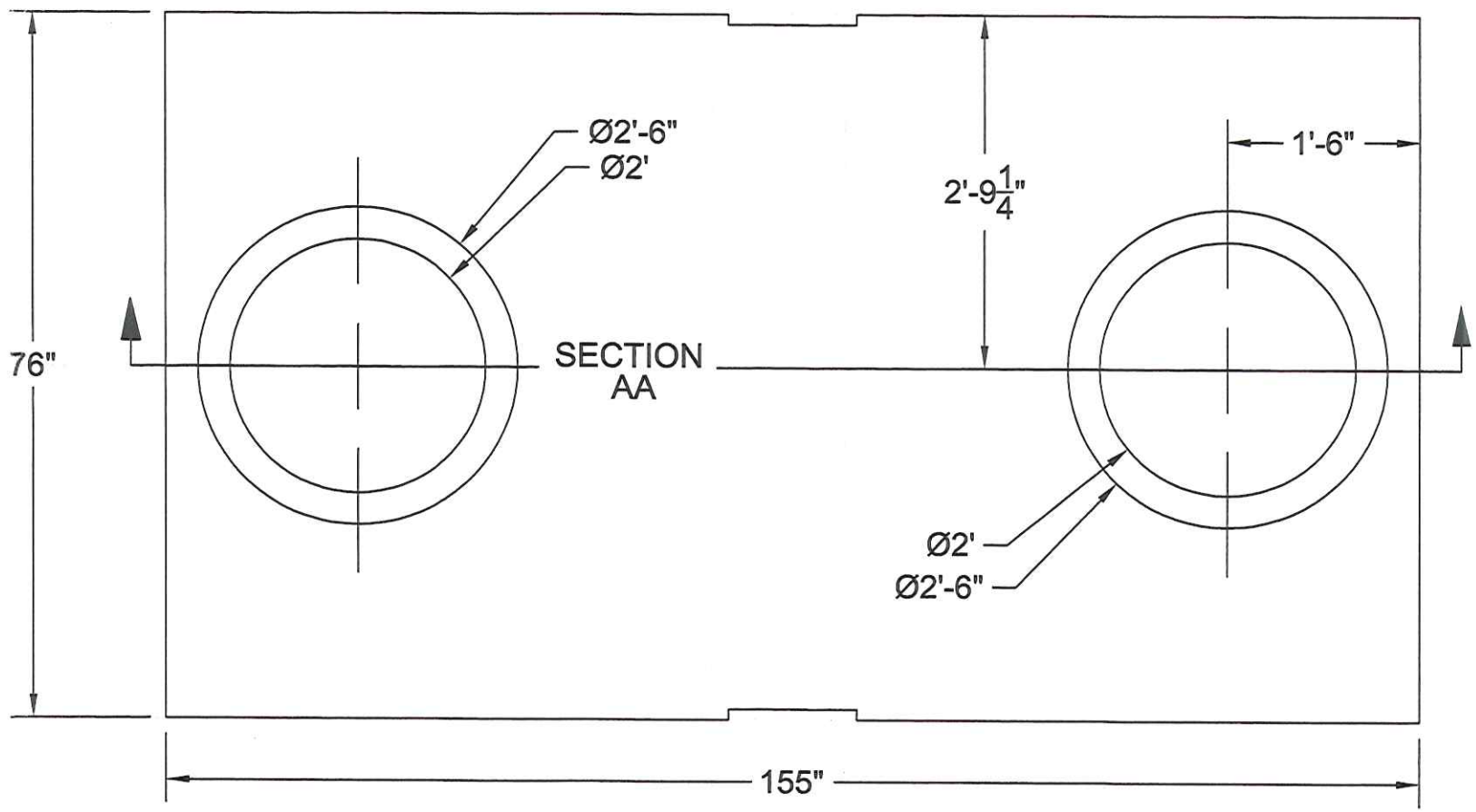

20100422A