Gravity Discharge, 2-Comp. Recirculating Tank

Filter Tank Dry Weight: 860 lbs

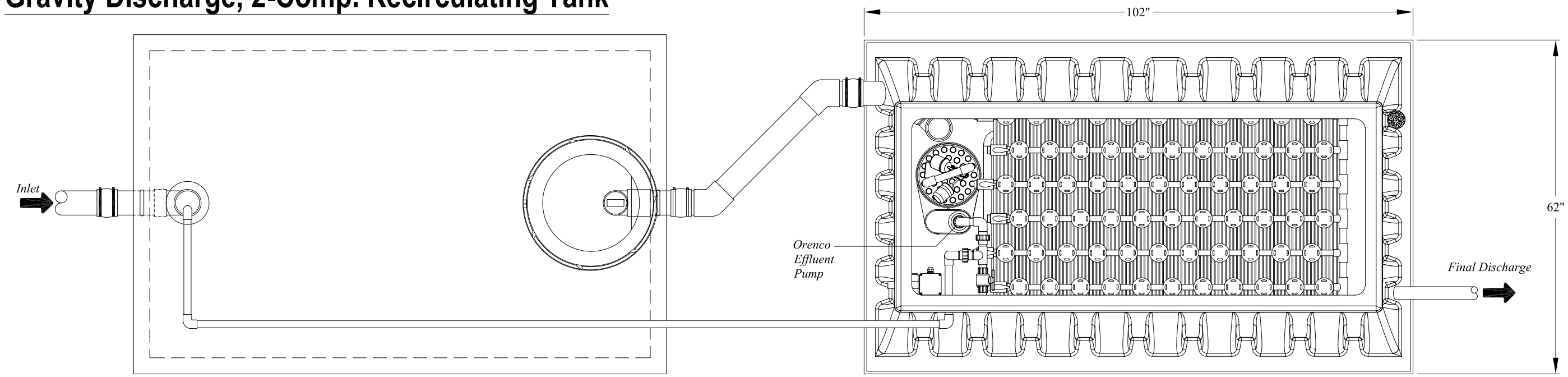

1000 gal. Primary Tank - Top View

800 gal. Recirculating Tank - Top View

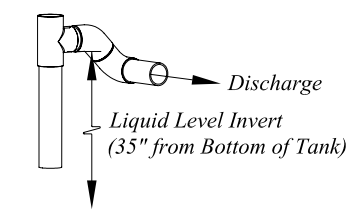

Discharge Detail

Not To Scale

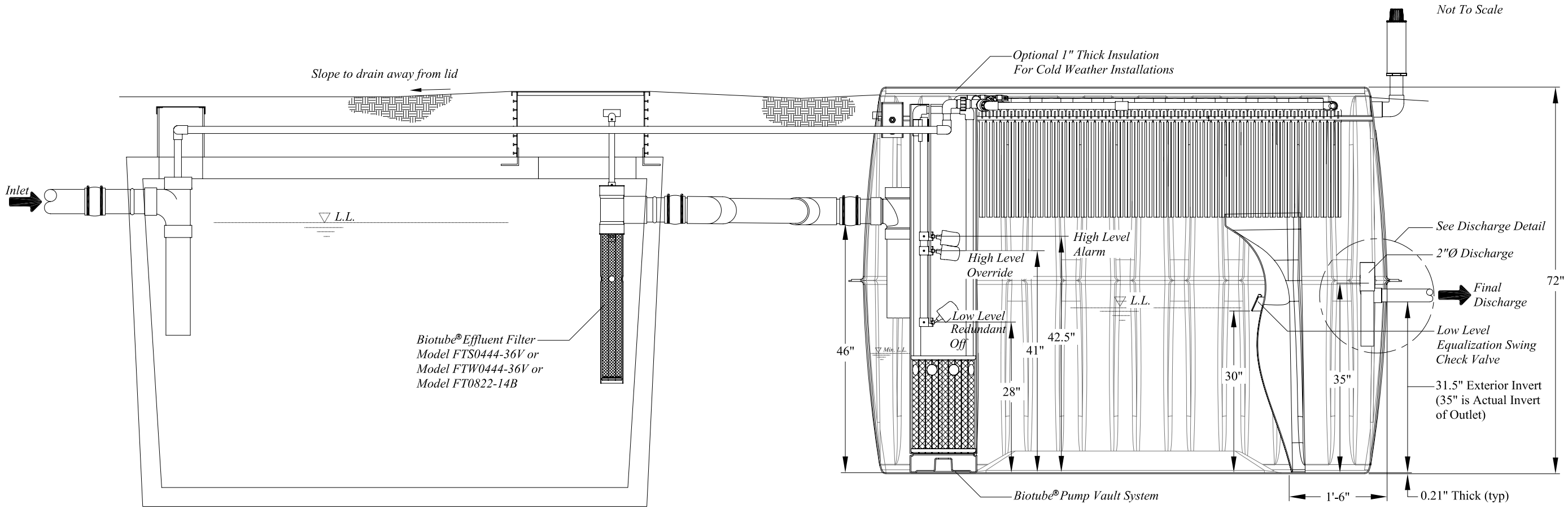

1000 gal. Primary Tank - Side View

800 gal. Recirculating Tank - Side View

Orenco Systems® Incorporated

Title: AX20RT-Mode 3A	Drawing No. NDW-ATX-RT-08	Scale: 1" = 20"
Drawn By: CHRIS JORDAN	Drawing: 1 OF 1	Date: 2/12/2010
Designed By: ENGINEERING	Approved By:	Revision: A-01
		Date Approved:

U.S. Patents-4,439,323
5,492,635-6,372,137-5,360,556
5,980,748-5,531,894- 5,480,561
Other Patents Pending

© 2005 Orenco Systems ®, Inc