AdvanTex® O&M MANUAL

SUPPLEMENTAL INFORMATION, AX20-RT

2010045 4

Introduction: AdvanTex® AX20-RT Treatment Unit Operation

This supplement contains information to help you successfully operate and maintain an AdvanTex® AX20-RT Treatment Unit. The AX20-RT operates similarly to the AdvanTex AX20 Treatment System, but there are some differences to be aware of when performing O&M activities. A big difference is that the AX20-RT consists of a single, self-contained module for recirculation, treatment, and dosing, instead of separate units.

Another difference is that the AX20-RT has no Recirculating Splitter Valve (RSV). Effluent percolates down through the textile media and is split — by means of a tank baffle — between the recirculating side and the discharge side of the AX20-RT recirculating treatment tank.

The Advantex AX20-RT Treatment System has 10 main functional areas and components:

1. Septic Tank Inlet Tee
2. Biotube® Effluent Filter
3. Biotube Pump Package
4. Recirculating Treatment Tank (recirc side)
5. Manifold and Laterals
6. Textile Media
7. Tank Baffle
8. Recirculating Treatment Tank (discharge side)
9. Flow Inducer and Discharge Pump Assembly
10. Control Panel (not shown)

Effluent from the clear layer in the septic tank passes through a Biotube® effluent filter and is discharged by gravity to the recirc side of the AX20-RT unit, which contains a Biotube Pump Package. The Biotube Pump Package pumps filtered effluent from the recirc side of the AX20-RT unit's recirculating treatment tank to the distribution manifold in the top of the unit.

The operation of the pump on the recirc side of the tank baffle is controlled by a timer in the control panel, which allows the pump to dose the textile media for short periods (usually a half-minute or less), typically 72 times a day. This frequent "microdosing," which optimizes the treatment process, occurs 24 hours a day to maintain the proper biological environment.

Treated effluent can be discharged to the drainfield by means of a flow inducer and discharge pump or by gravity discharge. The "High Level Alarm" and "ON" floats for the discharge pump are set at the factory and are non-adjustable. Dose volume for the pump discharge is determined by adjustments to the "OFF" float. AX20-RT units with gravity discharge simply discharge when the level of treated effluent in the discharge side of the tank is at the level of the discharge outlet.

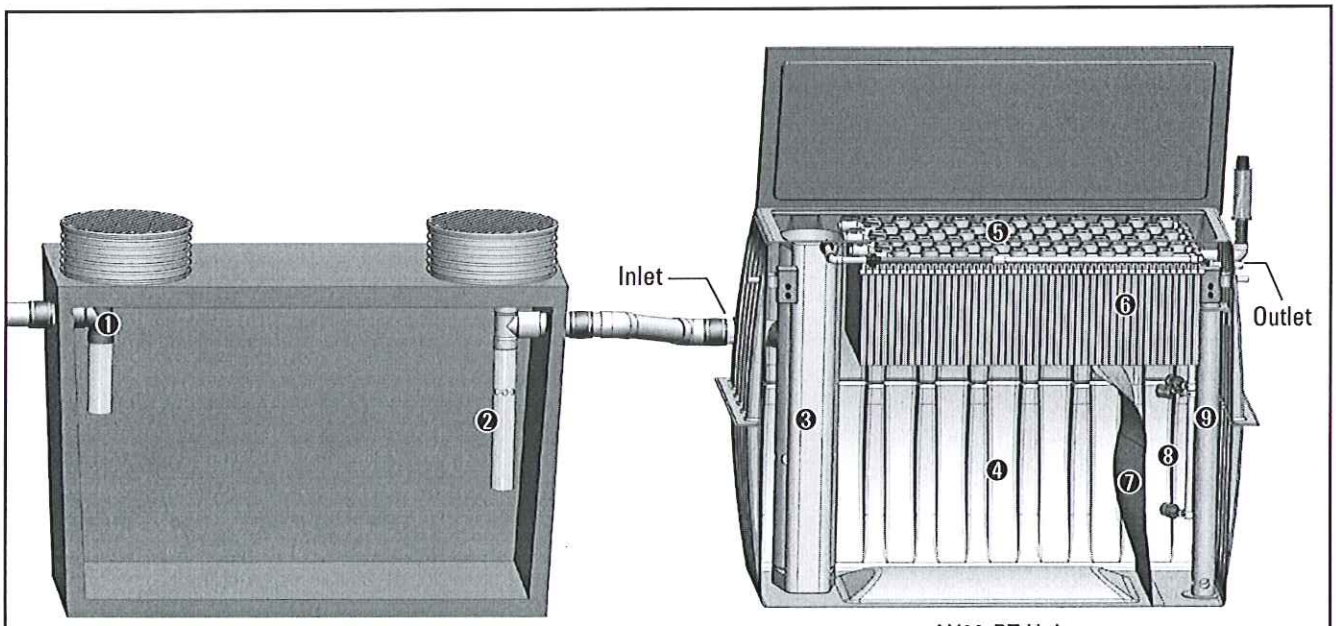

Septic Tank

AX20-RT Unit
(pump discharge configuration shown)

Copyright Orenco Systems®, Inc. Property of Orenco Systems®, Inc. Do not reproduce or distribute without written authorization from Orenco: 800-348-9843. • AIM-OM-ATX-SUP-1, Rev.1.0, 1/10

Typical Site Plan for an AdvanTex AX20-RT Treatment Unit

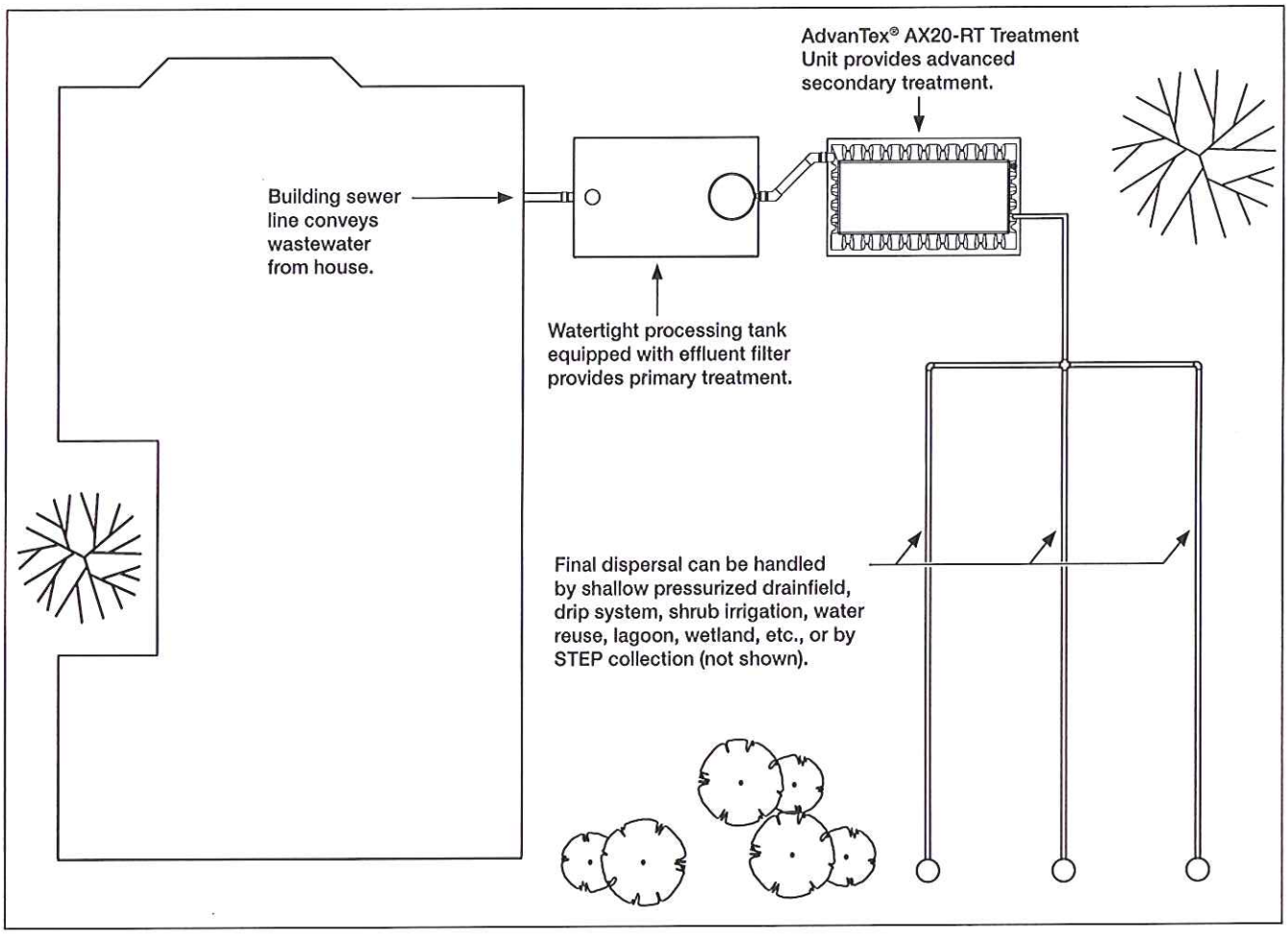

 • Copyright Orenco Systems®, Inc. Property of Orenco Systems®, Inc. Do not reproduce or distribute without written authorization from Orenco: 800-348-9843.

AdvanTex O&M Manual: Changes Specific to the AX20-RT

The following shows AX20-RT-specific information not found in Parts 1 and 2 of the *AdvanTex® O&M Manual* that are relevant to operating and maintaining the AdvanTex AX20-RT Treatment Unit. Use the general information found in the *O&M Manual* along with this information to start up and properly service AX20-RT systems.

Start-Up Checklist Changes

Primary Treatment

Note: *All pumping equipment is contained in the AX20-RT unit. Substitute the checklist item below for the checklist items in the "Process Tank Pumping Equipment" and "Process Tank Pumping System" sections.*

Septic Tank

☐ Biotube® filter installed correctly on the septic tank outlet.

Secondary Treatment

Note: *There is no recirculating splitter valve (RSV) or separate discharge basin in an AX20-RT system. Floats in the Biotube® Pump Vault Unit (PVU) are set at the factory for correct performance. Do not adjust the floats in the PVU. Substitute the checklist items below for the checklist items in the "Secondary Treatment" section.*

AX20-RT Unit

☐ AX20-RT unit installed level.

☐ All piping properly covered and compacted.

Ventilation System

☐ Passive air vent on AX20-RT unit properly installed.

Biotube® Pump Vault Unit

☐ Floats operate properly.

☐ Pump plumbing connected correctly to manifold.

Biotube Pump Vault Operation

☐ Pump operates in "Manual."

☐ Pump operates in "Automatic."

☐ Pump run amps:_____

☐ Pump rest volts:_____ run volts:_____

AX20-RT Filter Operation

☐ Squirt height verified.

AX20-RT Discharge Unit (pump discharge only)

☐ Floats operate properly.

☐ Pump discharge plumbing connected correctly.

☐ "Off" float adjusted for correct discharge dose to dispersal.

Setting Discharge Flow Volume

The AX20-RT is pre-set at the factory for a discharge flow volume of 42.5 gal/dose (161 L/dose). If necessary, use the discharge pump "Off" float to make adjustments to the discharge flow volume. Each 1-in. (12.7 mm) increase or decrease in "Off" float height is equal to approximately 4 gal. (15 L) change in volume.

Do not adjust the settings of the "High-Level Alarm" and "On" floats.

Table 1. Dose Volume Information

Pump gal./min (L/sec)	10 (0.6)	20 (1.3)	30 (1.9)	50 (3.2)
Factory float setting*, in. (mm)	25 (635)	25 (635)	25 (635)	25 (635)
Lowest "Off" setting, in. (mm)	16 (406)	18 (457)	20 (508)	24 (610)
Max dose volume, gal. (L)	76 (288)	68 (257)	64 (242)	56 (212)

**Settings are measured from the bottom of the discharge side of the AX20-RT unit.*

Perform Field Sampling

When you arrive at the site, remove the lid from the AX20-RT and take your sample from the discharge side of the AX20-RT unit before doing anything else, so that the sample won't be contaminated by material that you stir up while working.

When you collect effluent samples, be careful not to touch the textile sheets, unit walls, or other components. Disturbing the sheets, walls, or other components could contaminate the samples. Also, be sure to thoroughly clean and dry your sampling device between uses to avoid cross-contamination.

Measure Sludge and Scum

Measure sludge and scum in the process tank AND on the recirc side of the AX20RT. Follow the instructions for pumpouts found in the *AdvanTex O&M Manual* for the process tank.

NOTE: *A light buildup of solids is expected to form in the AX20-RT unit over time. After the second year that the system is in use, we recommend measuring solids accumulation in the AX20-RT whenever you perform regularly scheduled maintenance.*

If more than trace amounts of scum or solids are found in the recirc side of the AX20-RT unit, check the distribution side of the unit for solids and scum, schedule a pumpout, and begin troubleshooting the system. The *Advanced Service Tips and Troubleshooting Guide* can help you determine the cause. You may need to change timer settings or discuss household habits with the system users.

Copyright Orenco Systems®, Inc. Property of Orenco Systems®, Inc. Do not reproduce or distribute without written authorization from Orenco: 800-348-9843.

Notes

 Copyright Orenco Systems®, Inc. Property of Orenco Systems®, Inc. Do not reproduce or distribute without written authorization from Orenco: 800-348-9843.