W2700 BIO 3000 GPD
MICRO® OR HIGHSTRENGTHFAST®
TANK SPECIFICATIONS

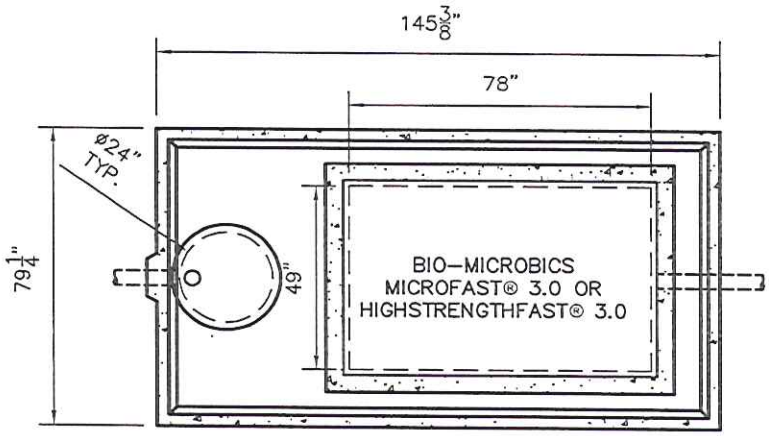

TOP VIEW

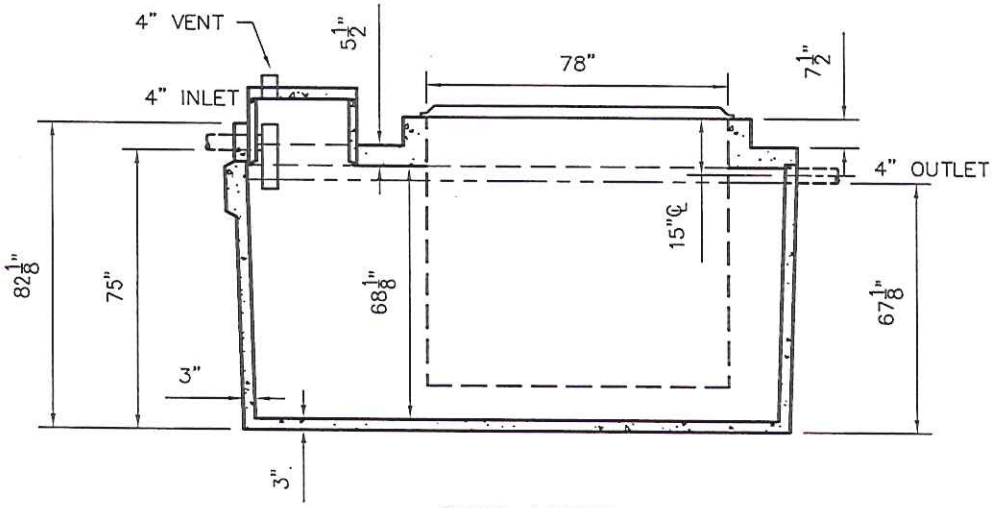

SIDE VIEW

DIMENSIONS:
- WALL: 3"
- BOTTOM: 3"
- COVER: 5 1/2"
- MANHOLE: 24" I.D. PRECAST CONCRETE RISER
- HEIGHT: 82 1/8" O.D.
- LENGTH: 145 3/8" O.D.
- WIDTH: 79 1/4" O.D.
- BELOW INLET: 75" O.D.
- LIQUID LEVEL: 64"

WEIGHT: BOTTOM 20,095 LBS.

INLET AND OUTLET:
4" CAST–A–SEAL BOOT OR EQUAL
GASKET, CAST–A–SEAL BOOT OR EQUAL

INLET AND OUTLET BAFFLE AND FILTER:
AS SHOWN

INLET TEE PVC PIPE IN ACCORDANCE WITH
TABLE 2, COMM. 84.30, WIS. ADMIN. CODE

LIQUID CAPACITY: 42.46 GAL/IN

LOADING DESIGN: 8' 0" UNSATURATED SOIL

TANK CAN BE USED AS:
BIO–MICROBICS
MICROFAST® 0.9
OR
HIGHSTRENGTH® 1.0

NOTES:
If tank in front of 2700 BIO has a liquid level of less than 66". The gallon capacity of the extra tank increases to 1800 gallons.
(see chart)

20110020A

CUSTOMIZED TANKS:
TANKS CAN BE CUSTOMIZED CONTACT WIESER CONCRETE

TANKS ARE MANUFACTURED TO MEET OR EXCEED ASTM C–1227 REQUIREMENTS

DATE:	
REV NO.	
SCALE: 1/4" = 1'	
DRAWN BY: SWT	
DATE: JANUARY 2008	
FILE: W2700 BIO–3000 GPD	

WIESER CONCRETE
W3716 US HWY10, MAIDEN ROCK, WI 54750
800–325–8456

W2700 BIO–3000 GPD
SEPTIC MANUAL
REV. JAN. 2008

SHEET NO. 0 OF 0