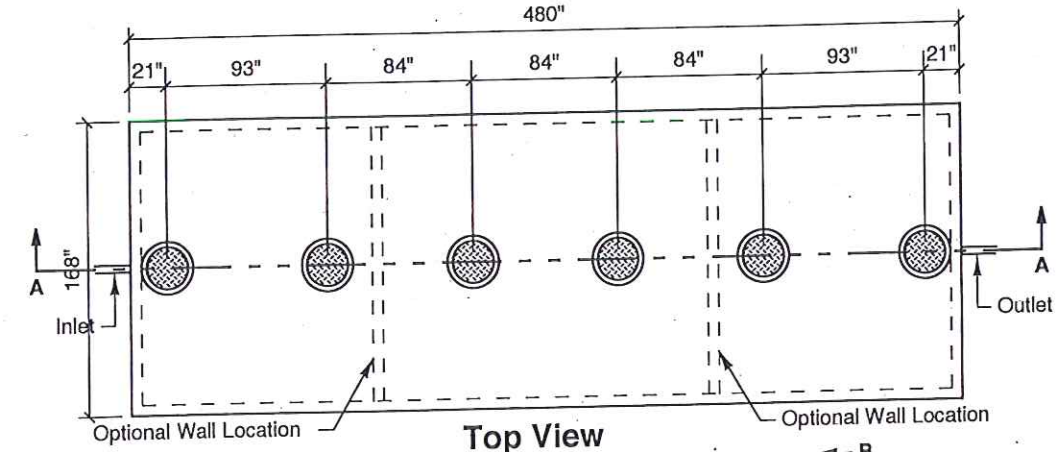

Top View

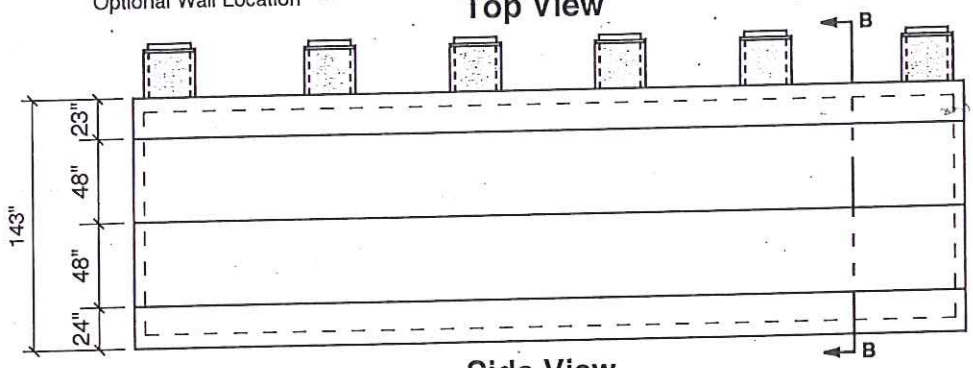

Side View

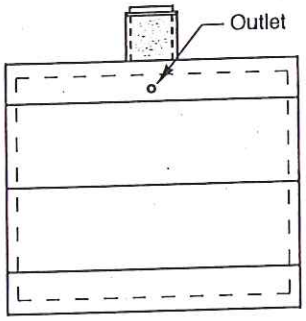

End View

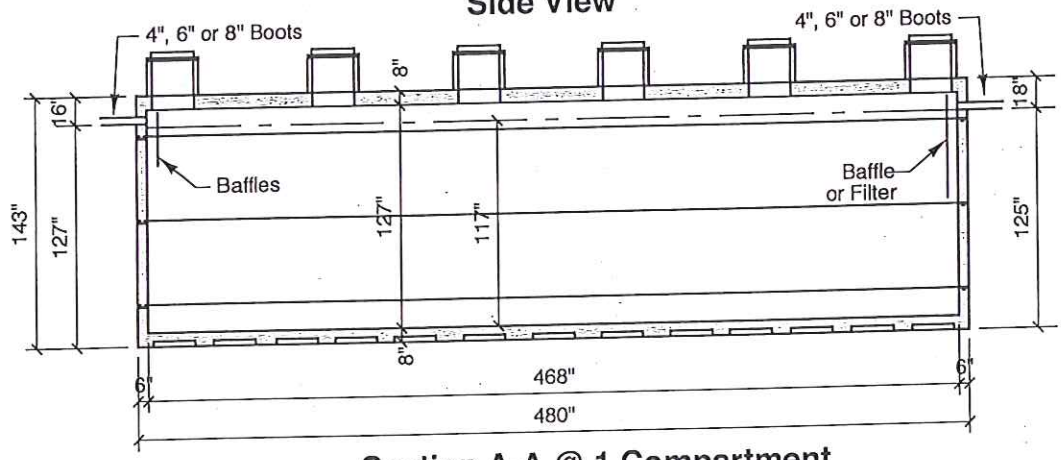

Section A-A @ 1 Compartment

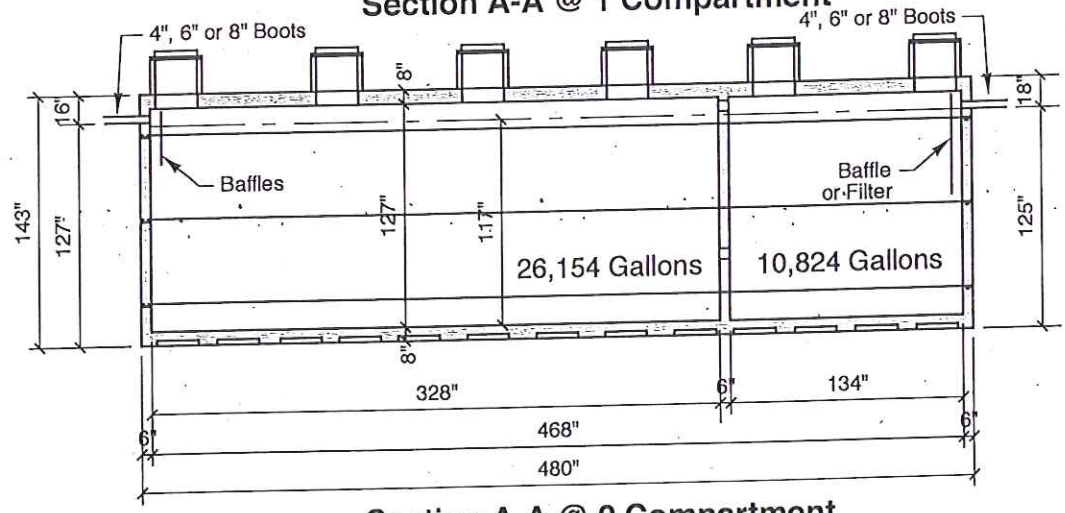

Section A-A @ 2 Compartment

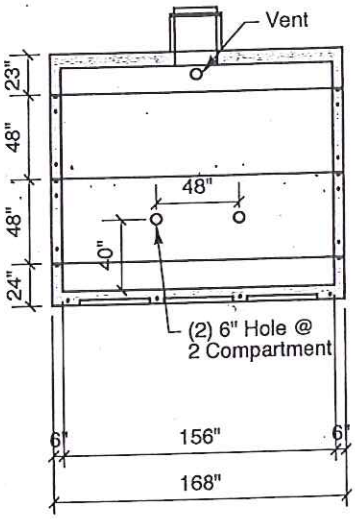

Section B-B

Pump/Holding
127" LL
146" INLET

1 or 2 Compartment

~~37,000 GALLON~~
~~Septic/Grease~~
~~117" LL~~
~~127" INLET~~

1 or 2 Compartment

40,000 Pump/Holding Tank

127" LIQUID LEVEL
146" INLET
40,138 GALLONS ACTUAL
316.05 GPI TOTAL
84" MAXIMUM BURY
200,000# EMPTY WEIGHT

37,000 Septic/Grease

117" LIQUID LEVEL
127" INLET
125" OUTLET
36,978 GALLONS ACTUAL
316.05 GPI TOTAL
84" MAXIMUM BURY
200,000# EMPTY WEIGHT
GREASE INTERCEPTOR REQUIRES 6 MANHOLES
W/ BOLTED AND SEALED CAST IRON COVERS
& Warning Label "WARNING DO NOT ENTER
TANK W/ OUT PROPER EQUIPMENT"

20110078

Conditionally
APPROVED
DEPARTMENT OF COMMERCE
DIVISION OF SAFETY AND BUILDINGS
SEE CORRESPONDENCE

DESIGN NOTES:
QUALITY CONTROL PROGRAM IN PLACE
W/C RATIO OF .045 OR LESS
6,000 PSI MINIMUM CONCRETE @ 28 DAYS
VACUUM TESTING IS RANDOM BY CREST
TANKS DESIGNED TO WITHSTAND THE PRESSURES TO WHICH
IT WILL BE SUBJECTED PROVIDED INSTALLER TO FOLLOW
CREST BACK FILL AND BEDDING GUIDE #1-17
TANK SIZE MARKED ON OUTLET END

APPLIED REFERENCE NO.
001, 002, 003, 004, 005, 07B, 008, 012
014, 017, 018, 019, 021, 022, 022A, 022B, 023
024 AND MOST RECENT APPROVALS THAT INCLUDE
THE FOLLOWING OPTIONS: FILTERS: DOC APPROVED ZABEL, BEAR, BEST
OR ORENCO MODELS LOCATED AT OUTLET WITH ACCESS OVER FILTERS
PIPE PORTS; 4", 6", OR 8"
RISER OPENINGS: MINIMUM 24" DIAMETER OPTION 36", 48",
OR RECTANGLE / SQUARE WITH MINIMUM 24" CLEAR OPENING

BAFFLE SIZE
BAFFLES ARE FORMED PVC WITH A MINIMUM OF 6" CLEARANCE TO WALL
INLET 9" ABOVE L.L. AND 24" BELOW L.L.
OUTLET 9" ABOVE L.L. AND 48" BELOW L.L.
GREASE OUTLET 9" ABOVE L.L. AND 77" BELOW L.L.

REINFORCEMENT
BOTTOM, TOP & SIDES: 4 x 4 x 4 MESH LOCATED 1 1/4" FROM INSIDE FACE
POST TENSION CABLES ARE CAST INTO BOTTOM TOP & SIDES
FOR ADDITIONAL DESIGN REQIREMENTS

MISC. NOTES
JOINT SEALANT - HIGH GRADE EZ STICK OR CS101
LABELS - WARNING SIGNS LOCATED ON ALL MANHOLES
ALL MANHOLES TO HAVE SECURE LOCKING DEVICE
INSTALLATION - SEE SEPARATE INSTALLATION GUIDE
BAFFLES INSTALLED
PIPE BOOTS ARE ALOK OR PRESS SEAL BRAND

316.05 G.P.I.

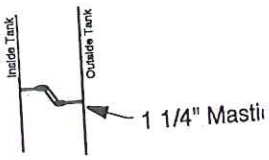

pical Ship Lap Joint

Cast Iron Lid Detail

Crest Precast, Inc.
La Crescent, MN & Barneveld, WI
800-658-9045

Scale		Drawn By:	KGT
Date	3-7-11	Revision	
Project:	40,000 Gallon Pump/Holding ~~37,000 Gallon Septic/Grease~~		
Contractor:		Drawing Number	MODEL 40,000