PART/PRINT #:	PART DESCRIPTION:	DATE:
HA-180058-107	TANK, PUMP 500	9/7/11

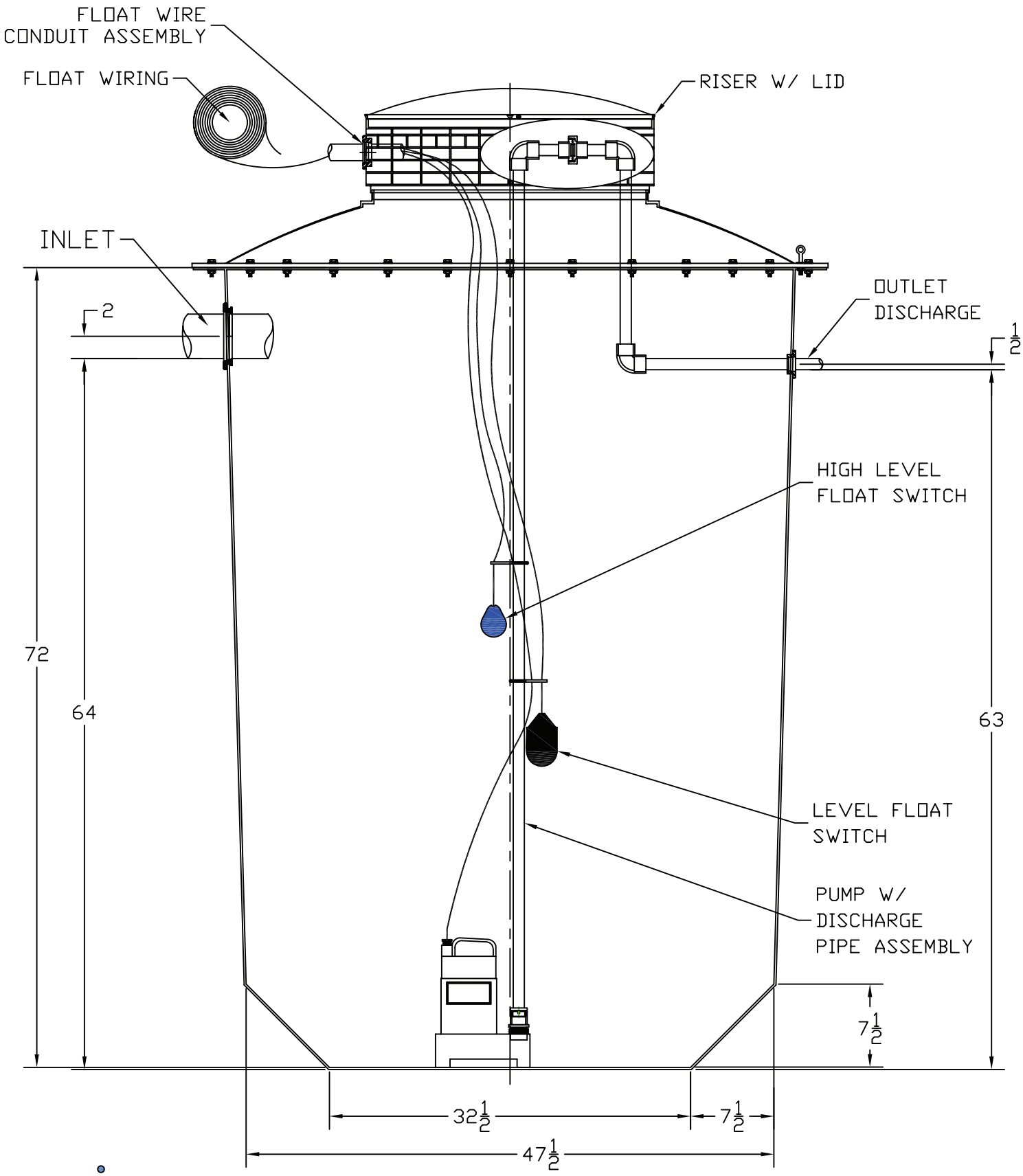

500 GALLON PUMP TANK

THIS DRAWING IS THE SOLE PROPERTY OF AK/HA MANUFACTURING LLC

hydro action®
green from the ground up

DRAWN BY:	SCALE:	REVISION#:	SIGNATURE:
A.DAVIS	1" : 1"		