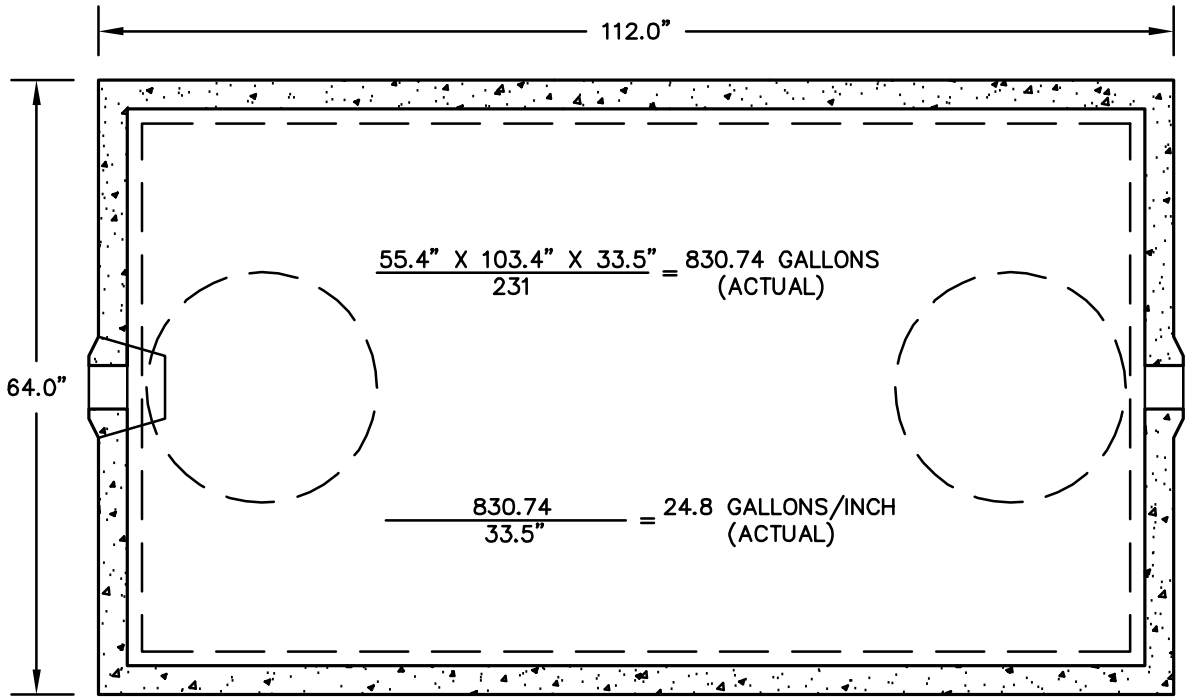

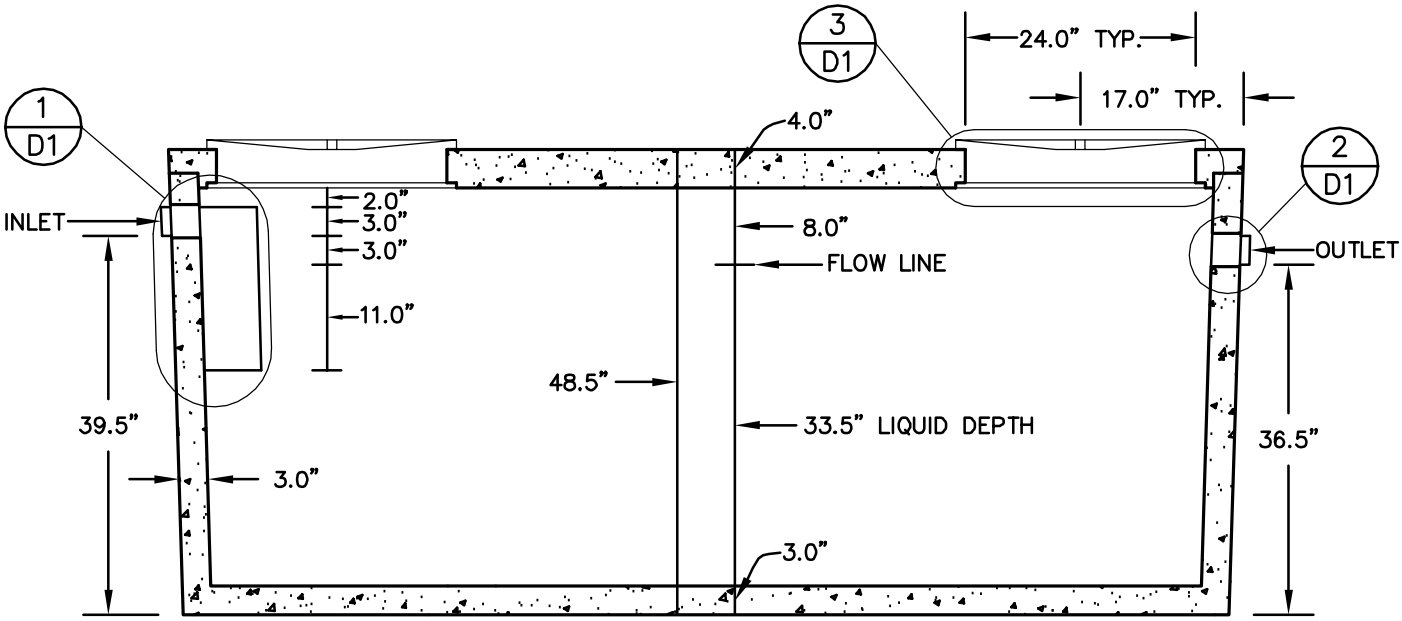

GENERAL NOTES:

1.) ALL TANKS ARE EFFLUENT FILTER COMPATABLE.
2.) OUTLET BAFFLES ONLY SUPPLIED PER REQUEST.
3.) 4" AND 6" MULTIPLE OPENINGS ARE AVAILABLE.
4.) NOTIFY WHEN DEPTH OF BURY IS GREATER THAN 72".
5.) 24" AND 30" MANHOLE OPENINGS ARE AVAILABLE.
6.) NOTIFY WHEN INSTALLING IN EXTREME WET CONDITIONS.

FILE # 20070261
G.P.D. = 398 GALLONS
WEIGHT = 8,500 LBS.

ONEIDA CONCRETE PRODUCTS
RHINELANDER, WI (800) 236-3124

SEPTIC TANK – 800 GALLON

02/09/10