750 GPD NIGHT PUMPING SYSTEM
H-750 AN,CP

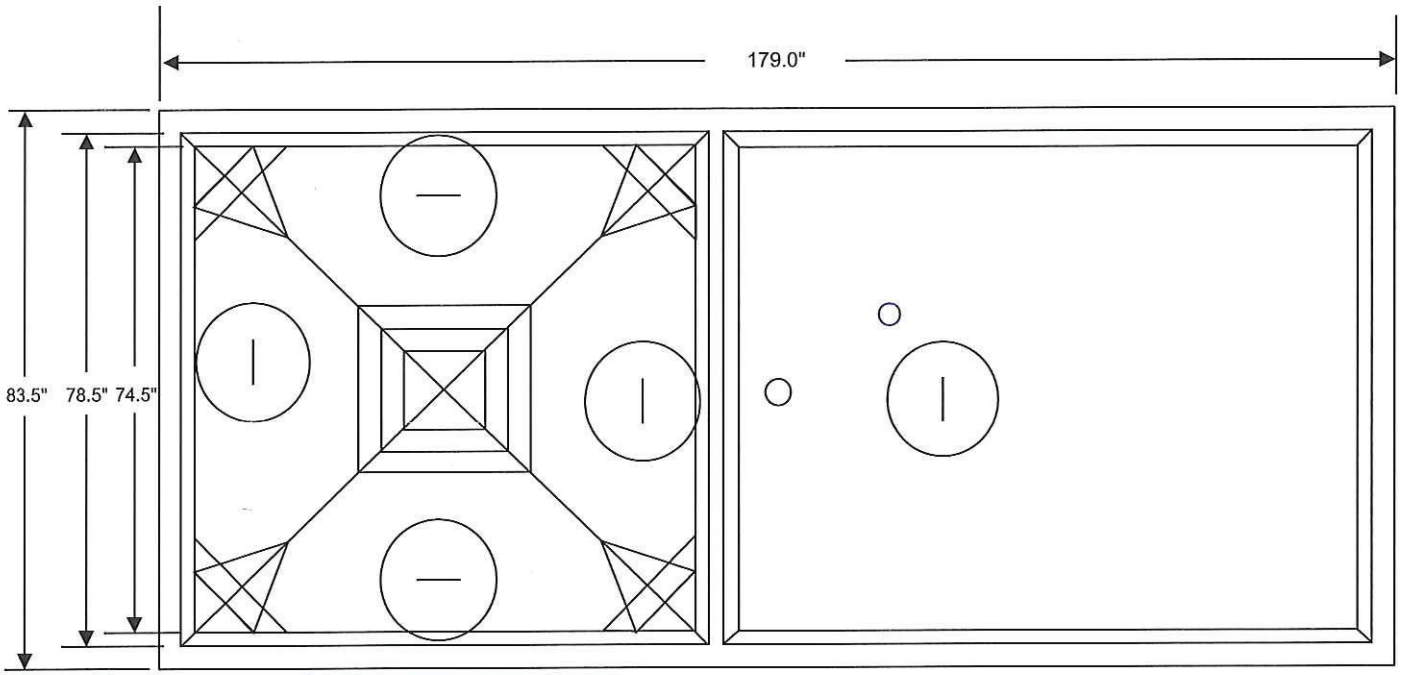

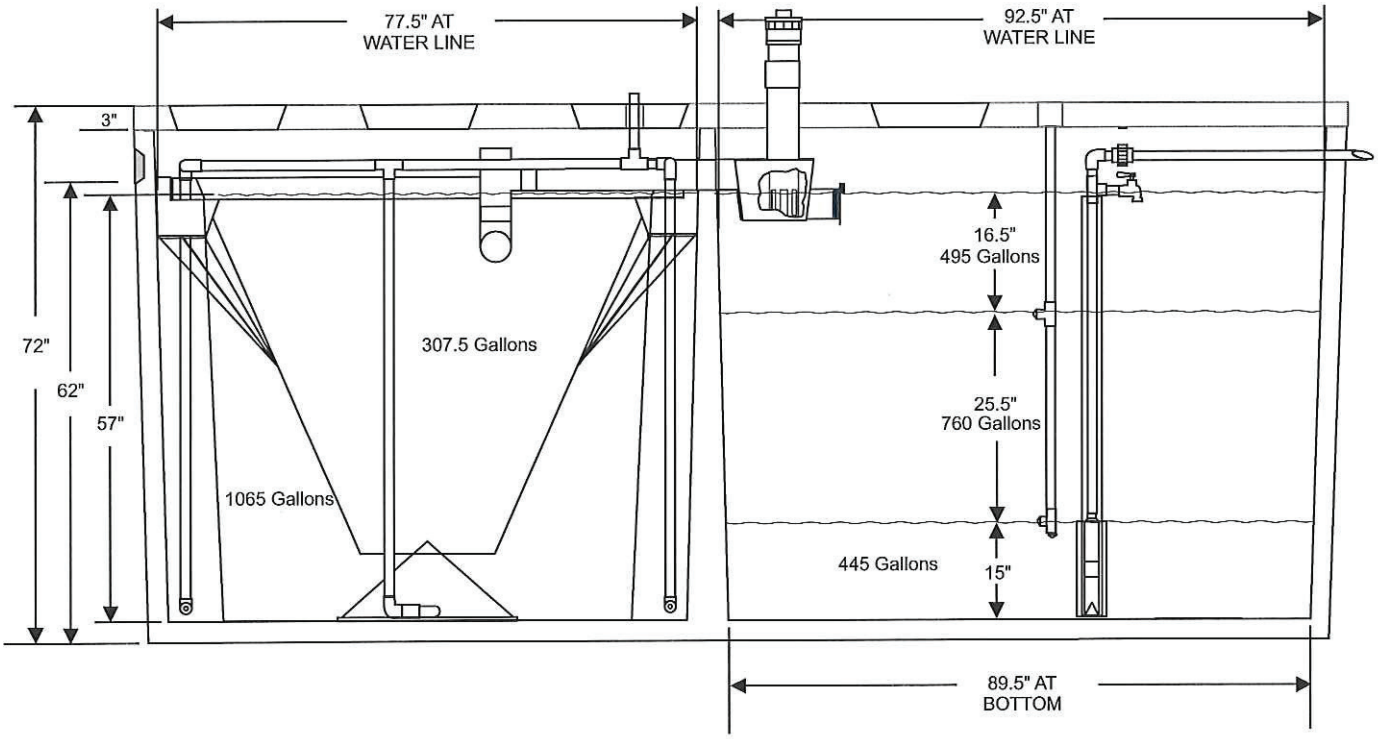

20120397

A

76" Avg. Length
76" Avg. Width
57" Depth

91" Avg. Length
76" Avg. Width
57" Depth

1700 Gallons
445 Gallons Remaining In Tank

1255 Gallons Pumping Capacity

Rev. 06

5/08/01