750 GPD GRAVITY FLOW SYSTEM
H-750 A

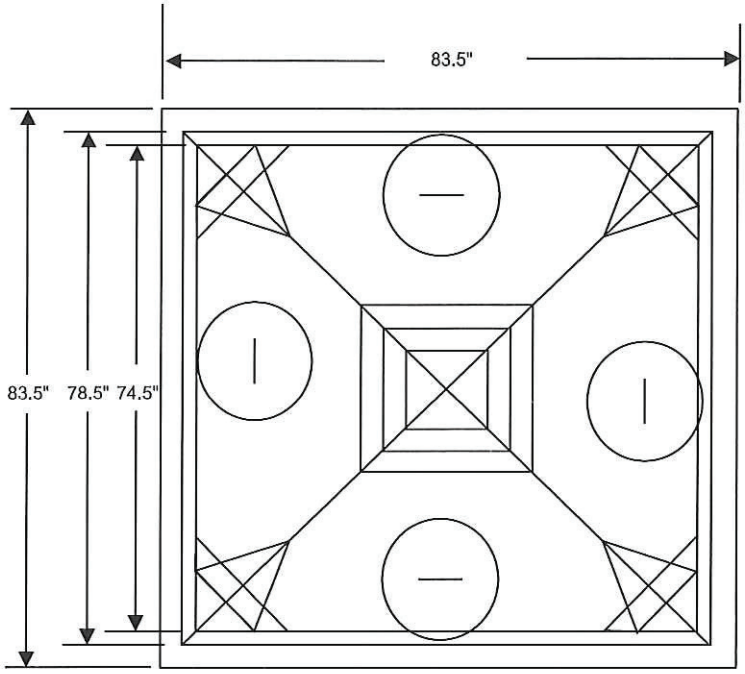

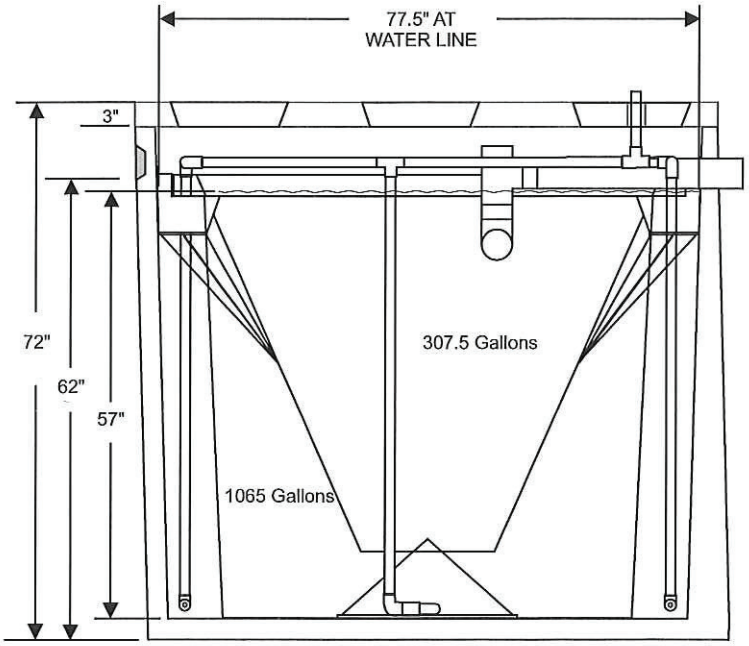

20120397
B

76" Avg. Length
76" Avg. Width
57" Depth