WEHD1000
TANK SPECIFICATIONS

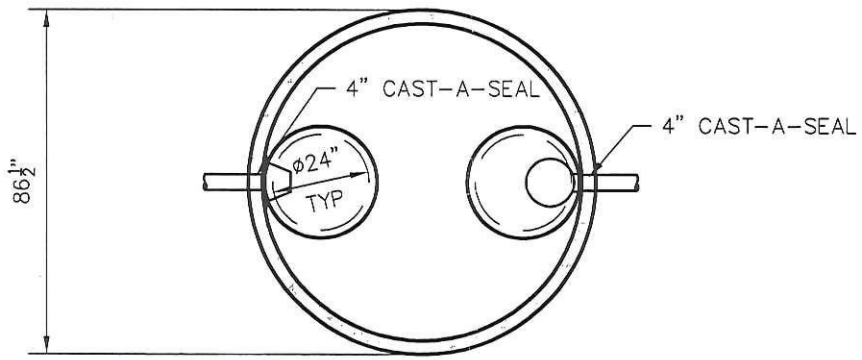

TOP VIEW

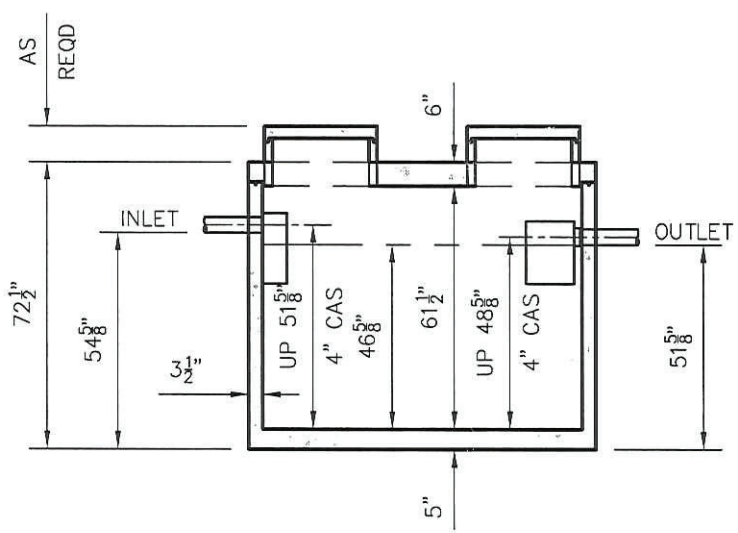

SIDE VIEW

DIMENSIONS:
- WALL: 3 1/2"
- BOTTOM: 5"
- COVER: 6"
- MANHOLE: 24" I.D. PRECAST CONCRETE RISER
- HEIGHT: 72 1/2" O.D.
- OUTSIDE DIAMETER: 86 1/2" O.D.
- BELOW INLET: 54 5/8" O.D.
- LIQUID LEVEL: 46 5/8"
- WEIGHT: TANK 7,000 LBS.
- WEIGHT: COVER 3,000 LBS.

INLET AND OUTLET:
- 4" CAST-A-SEAL BOOT, GASKET OR EQUAL

INLET AND OUTLET BAFFLE AND FILTER:
- WISCONSIN, SEE DETAIL #10
- (OTHER STATES SEE CHART)

LIQUID CAPACITY: 21.50 GAL/IN

HOLDING TANK:
- OUTLET HOLE PLUGGED
- ACTUAL CAPACITY: 1065 GALLONS

LOADING DESIGN: 12' 0" UNSATURATED SOIL / HS-20

TANK CAN BE USED AS:
- SEPTIC / HOLDING / PUMP OR SIPHON

COVER: MIX DESIGN #8 (NO FIBER)
TANK: MIX DESIGN #8 (NO FIBER)

CUSTOMIZED TANKS:
- FOR CUSTOM TANKS CONTACT WIESER CONCRETE

Conditionally APPROVED
SEE CORRESPONDENCE

DRAWINGS SUBMITTED FOR APPROVAL
APPROVED BY: _____
APPROVAL DATE: _____
PRODUCTS NEEDED BY: _____

TANKS ARE MANUFACTURED TO MEET OR EXCEED ASTM C-1227 REQUIREMENTS

PRE-POUR:
POST-POUR:
SCALE: 1/4"=1'-0"
REV.
DATE:
DRAWN BY: SME
DATE: JANUARY 2012
FILE: WEHD1000

WIESER CONCRETE
W3716 US HWY 10 MAIDEN ROCK, WI 54750
800-325-8456

WEHD1000
SEPTIC MANUAL
REVISED JAN. 2012

SHEET NO. 1 OF 1