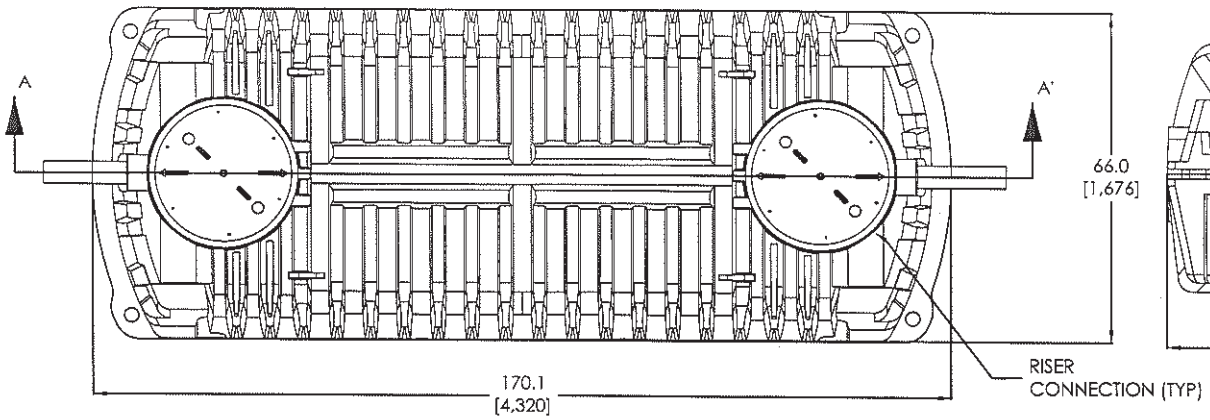

TOP VIEW

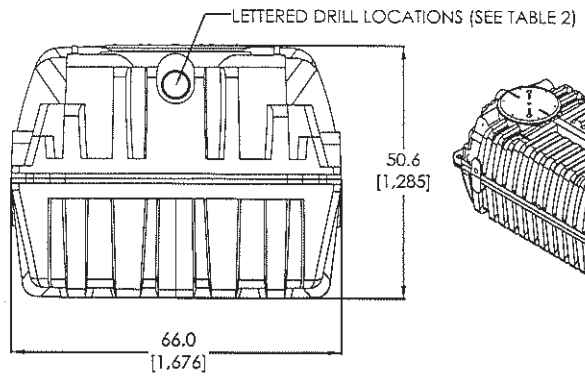

SIDE VIEW

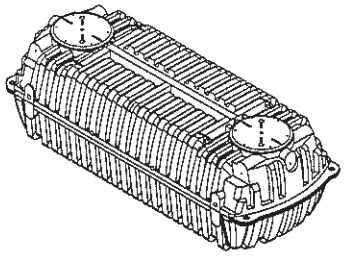

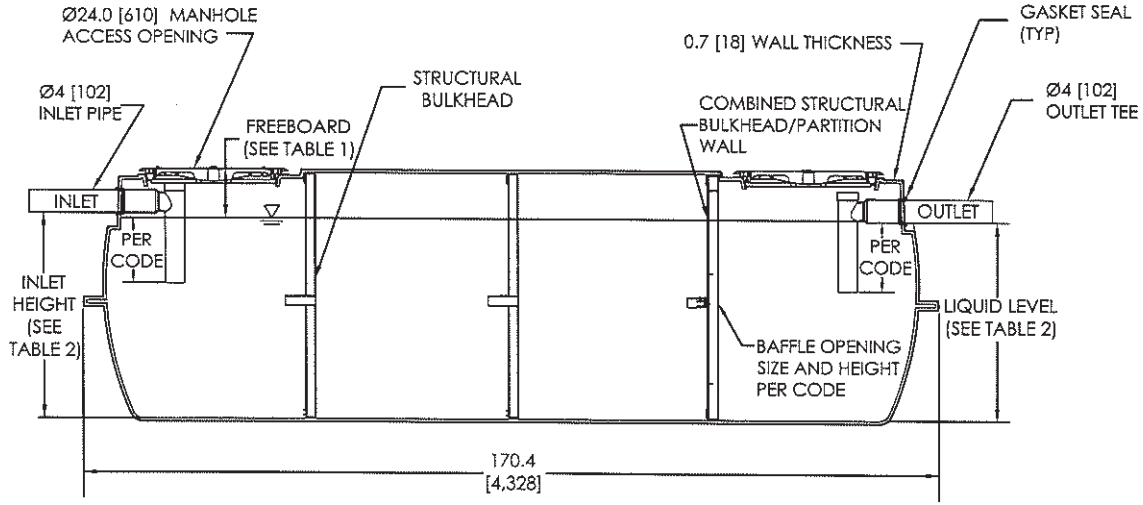

SECTION A-A'

TABLE 1 - SPECIFICATIONS

PARAMETER	UNITS U.S.[Metric]	LIQUID LEVEL 39.75 IN [1,010 mm]	LIQUID LEVEL 40.0 IN [1,016 mm]
TOTAL VOLUME	gal [L]	1,762 [6,669]	1,762 [6,669]
WORKING VOLUME	gal [L]	1,523 [5,765]	1,532 [5,798]
TANK LENGTH	in [mm]	170.4 [4,328]	170.4 [4,328]
TANK WIDTH	in [mm]	66.0 [1,676]	66.0 [1,676]
TANK HEIGHT	in [mm]	50.6 [1,285]	50.6 [1,285]
FREEBOARD	in [mm]	10.1 [256]	9.8 [249]

TABLE 2 - INVERTS AND LIQUID LEVEL

INVERT DROP IN [mm]	INLET DRILL LOCATION	OUTLET DRILL LOCATION	INLET INVERT HEIGHT IN [mm]	OUTLET INVERT HEIGHT AND LIQUID LEVEL IN [mm]
2.0 [51]	A	D	42.0 [1,067]	40.0 [1,016]
2.25[57]	A	C	42.0 [1,067]	39.75 [1,010]
3.0 [76]	B	C	42.75 [1,086]	39.75 [1,010]

GENERAL NOTES:

1. Tank markings include: manufacturer name, liquid capacity, manufacture date, maximum burial depth, model number, inlet, and outlet and state-specific approval number.
2. Maximum burial depth is 48 in [1,219 mm].
3. Dimensions on drawing shown in inches [millimeters].
4. Exterior of manhole cover includes the following warning: "DANGER DO NOT ENTER: POISON GASES" written in English, French and Spanish.
5. Working volume, liquid level and freeboard vary based on elevation of outlet, which varies by code.
6. This is a generic tank configuration. State, provincial or county regulations may require a different setup or features.
7. Invert drop can be 2.0 in [51 mm], 2.25 in [57 mm] or 3.0 in [76 mm] depending on applicable regulations.

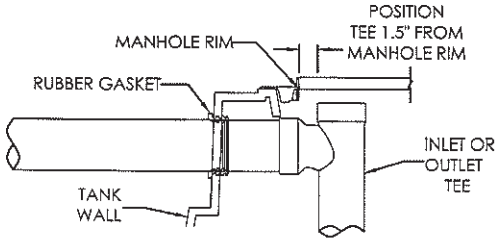

PIPE PENETRATION DETAIL

INFILTRATOR septic tanks

INFILTRATOR SYSTEMS INC.
6 Business Park Rd. Old Saybrook, CT 06475
(800) 221-4436

TW-1500 DOUBLE COMPARTMENT
SEPTIC TANK CONFIGURATION

Drawn by: R.D.	DWG NO. 1	Date: 12-05-08
SCALE Not to Scale	Checked by: DJL	SHEET 1 of 1

Q:TECH RES NEW/PRODUCTS/TANK/Individual models/1500-2 Compartment.DWG
2013 0089