20130226

TOTAL CAPACITY: 660.31 GAL

Conditionally
APPROVED

SEE CORRESPONDENCE
9-11-13

WARNING DEATH MAY OCCUR IF TANK IS ENTERED WITHOUT PROPER EQUIPMENT TYP

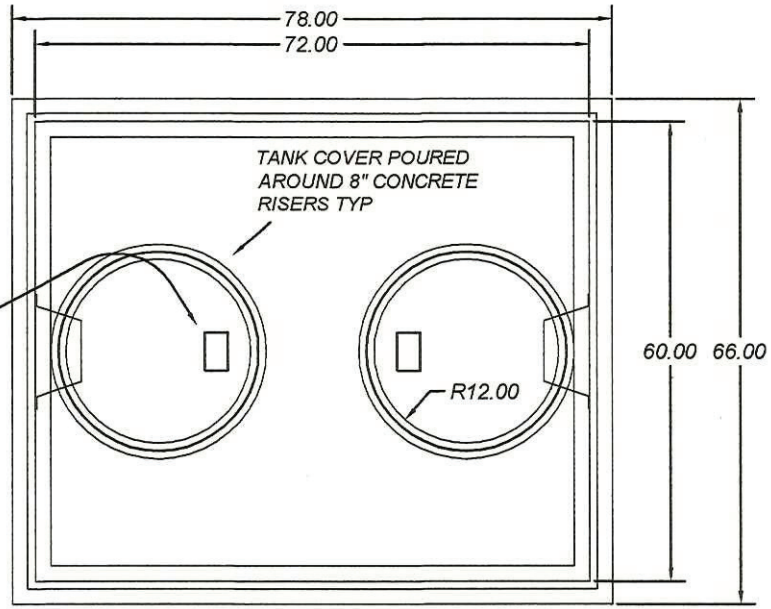

TOP VIEW OF TANK (TAPERED)

4 INCH PRESS SEAL
CAST A SEAL 452.0450
GASKET (TYP)

OUTLET END VIEW OF TANK

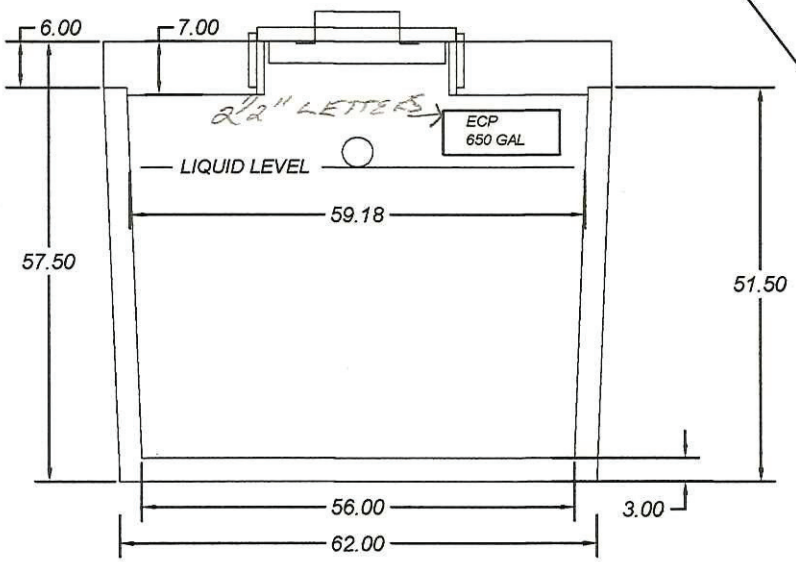

SECTION VIEW OF TANK AND COVER

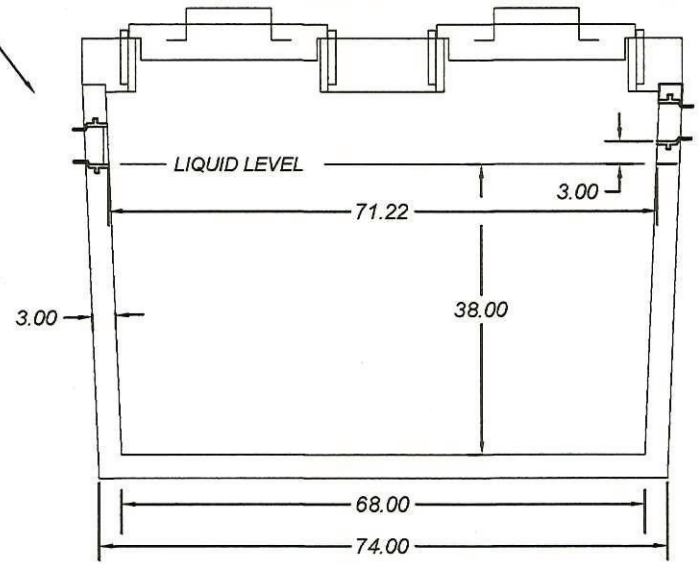

Model Number: **650 PUMP / SEPTIC**

Inlet Dim.	Outlet Dim.	Liq. Depth	Gal. / In.
44"	41"	38"	17.37

EVERGREEN CONCRETE PRODUCTS

1681 N 2nd Drive
Stevens Point WI 54482

Phone: (715) 341-0001
Fax: (715) 342-0119