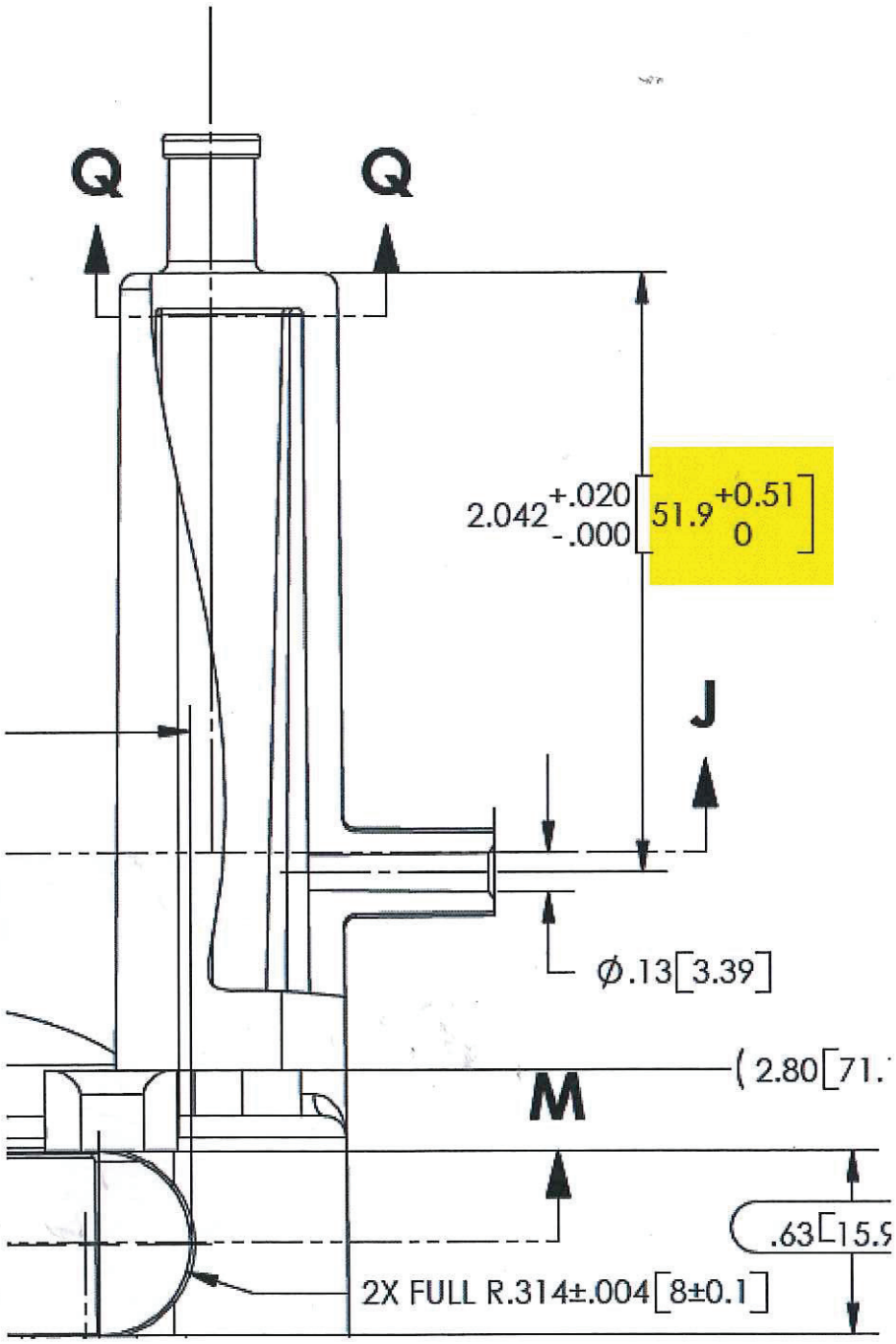
Q
Q
2.042 +.020 -.000 [51.9 +0.51 0]
J
Ø.13[3.39]
2.80[71.
M
.63[15.9
2X FULL R.314±.004[8±0.1]

NOTES: UNLESS OTHERWISE SPECIFIED

1. DIMENSIONS ARE IN INCHES WITH MILLIMETERS IN BRACKETS [ ].
2. UNSPECIFIED DIMENSIONAL TOLERANCES PER DIN 16901-130 CODE B.
3. THREADED INSERTS TO BE PLACED FLUSH TO .020 [0.5] BELOW MOUNTING SURFACE.
4. UNSPECIFIED RADII AND BREAK EDGES .02 [0.5]
5. UNSPECIFIED DRAFT ANGLES 0.5°
6. INTERNAL SURFACE STANDARDS PER VDI3400 REF 21.
7. SEAL SURFACES TO BE FREE OF SINKS, SCRATCHES, GROOVES AND OTHER SURFACE BLEMISHES.
8. INTERNAL RADIUS IN SEAL GROOVE = R.005 ±.002 [0.1 ±0.05]
9. PARTS TO BE DELIVERED CLEAN AND FREE OF GREASE MOLD RELEASE, DIRT AND OTHER FOREIGN MATERIAL.
10. MARKINGS: GENERAL LETTER SIZE TO BE 3-4mm RAISED 0.1-0.2mm.
11. MATERIAL MARKING ACCORDING TO ISO 11469.
12. OTHER GEOMETRIC INFORMATIONTO BE OBTAINED FROM THE APPLICABLE 3D MODEL.
13. EXTERNAL SURFACE STANDARDS PER VDI3400 REF 30.
14. 5 PLACES, M4x7.5 BRASS INSERT. INSERT ACCORDING TO BOELLHOFF/ HITSERT 09321040075 FLUSH TO SURFACE OR BELOW.
15. START UP DIMENSIONAL CHECK. FEATURE TO BE INSPECTED AT EACH MOLD SET UP PRIOR TO PRODUCTION RUN.
16. DAILY INSPECTION CHECK. FEATURE TO BE INSPECTED DAILY DURING PRODUCTION RUNS.

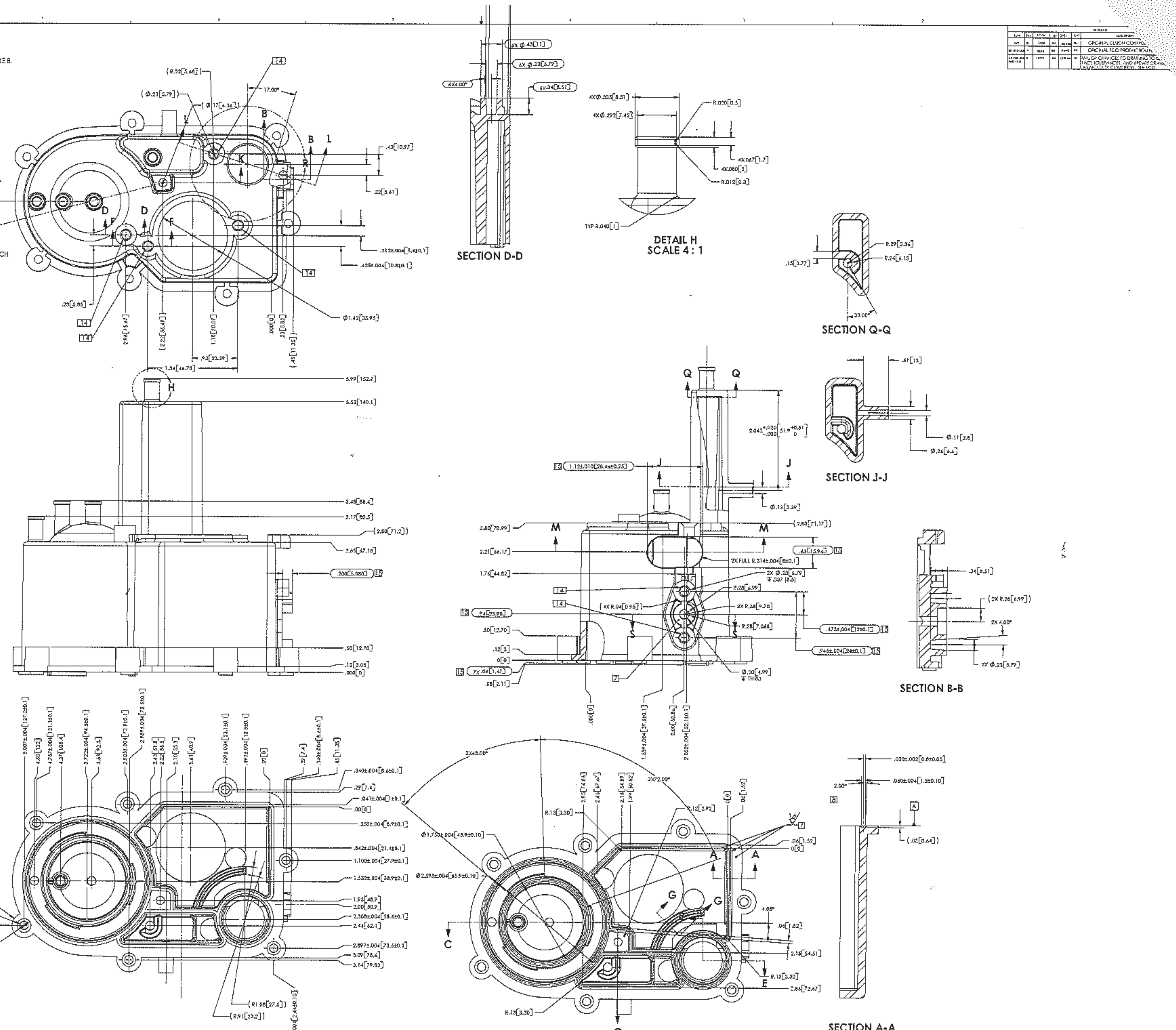

FRESENIUS NA

TITLE: TOP, HYDROCHAMBER

SIZE E DWG. NO. M33972 REV B

NOTES: SEE SHEET ONE FOR NOTES.

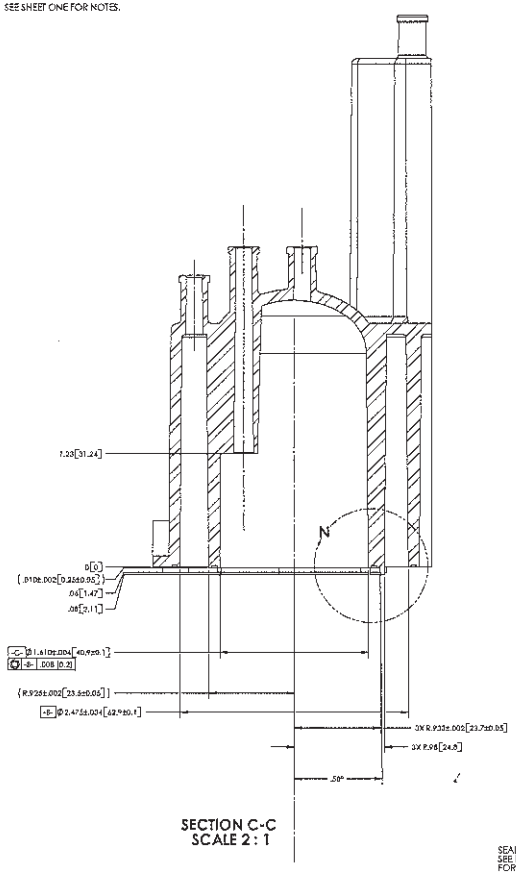

SECTION C-C
SCALE 2 : 1

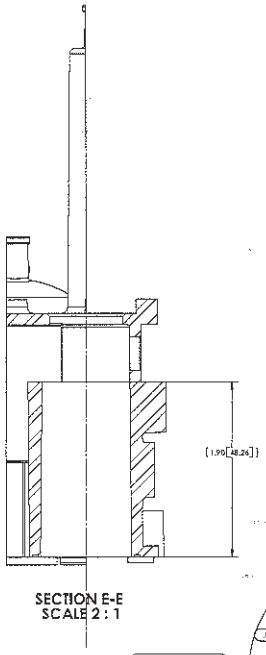

SECTION E-E
SCALE 2 : 1

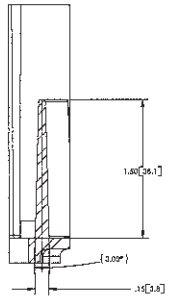

SECTION G-G
SCALE 2 : 1

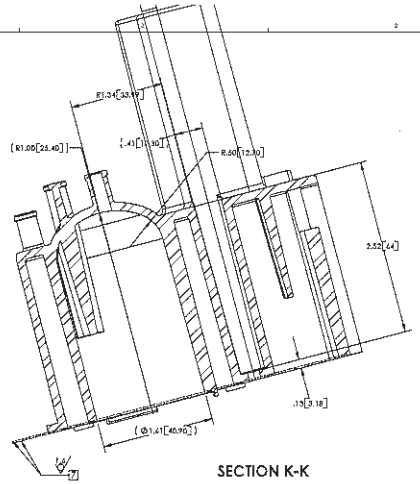

SECTION K-K

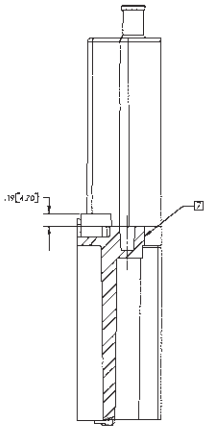

SECTION F-F

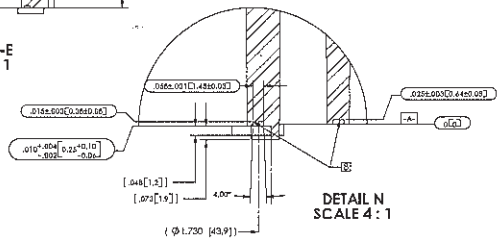

DETAIL N
SCALE 4 : 1

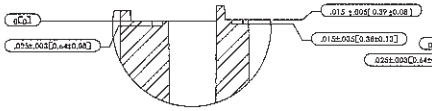

DETAIL Q
SCALE 4 : 1

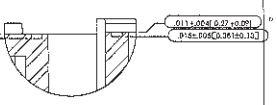

DETAIL U
SCALE 4 : 1

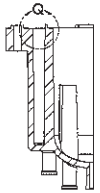

SECTION P-P
SCALE 1 : 1

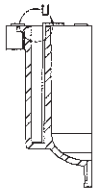

SECTION T-T
SCALE 1 : 1

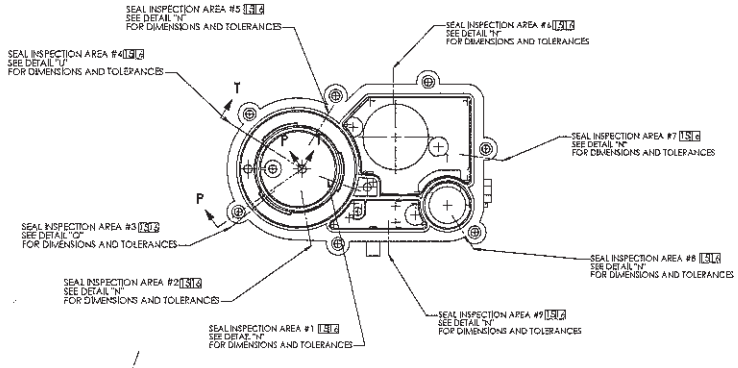

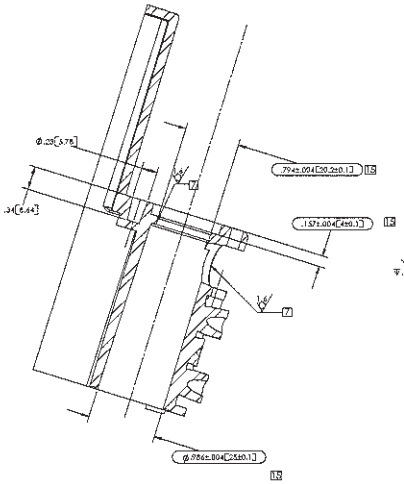

SECTION L-L

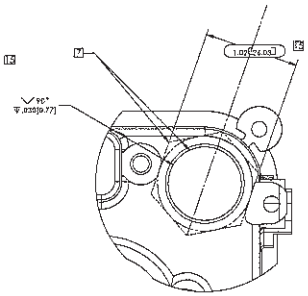

DETAIL R
SCALE 2 : 1

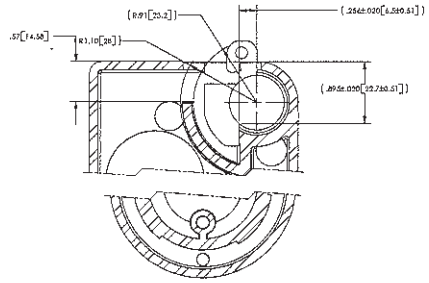

SECTION M-M

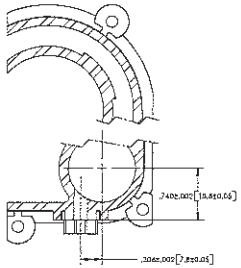

SECTION S-S

	DATE	NAME
DRAWN		
CHECKED		
ENG APPR.		
MFG APPR.		
Q.A.		
COMMENTS:		

FRESENIUS NA

TITLE: TOP HYDROCHAM

SIZE: E | CAGE CODE: | DWG NO: M2

SCALE: (.5) | SHEET