20130344 A

~~20100140~~

ZONE	REV	REVISION HISTORY DESCRIPTION	DATE	APPROVED

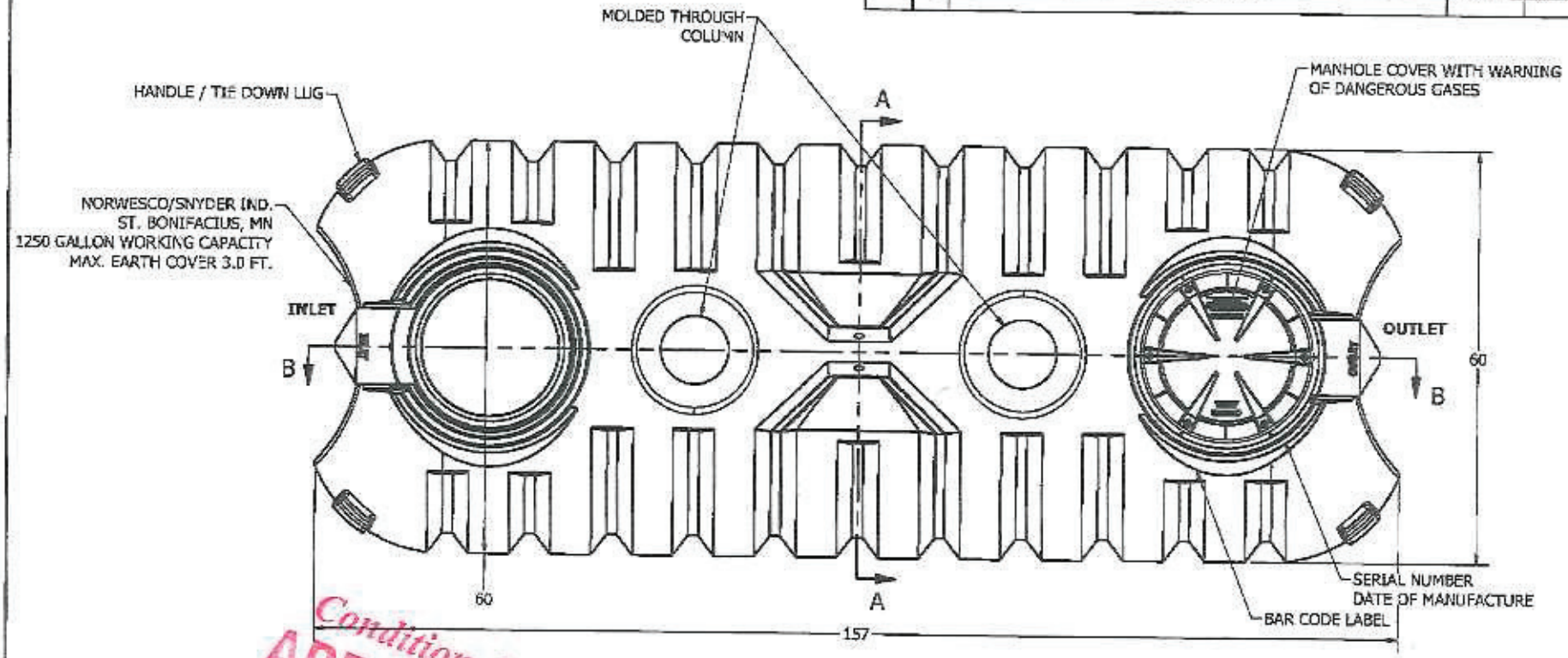

Conditionally APPROVED
DEPARTMENT OF COMMERCE
DIVISION OF SAFETY AND BUILDINGS
SEE CORRESPONDENCE

DRAWN Todd Bolzer	5/27/2011	NORWESCO, INC., ST. BONIFACIUS, MN
CHECKED		TITLE
QA		1250 GALLON LOW PROFILE SEPTIC TANK WISCONSIN
MFG		
APPROVED		
		SIZE B — NORWESCO P/N: 43497 — SNYDER IND. P/N: 1006900W95301 — REV
		SCALE: 1/16 — SHEET 1 OF 2

20130344 A

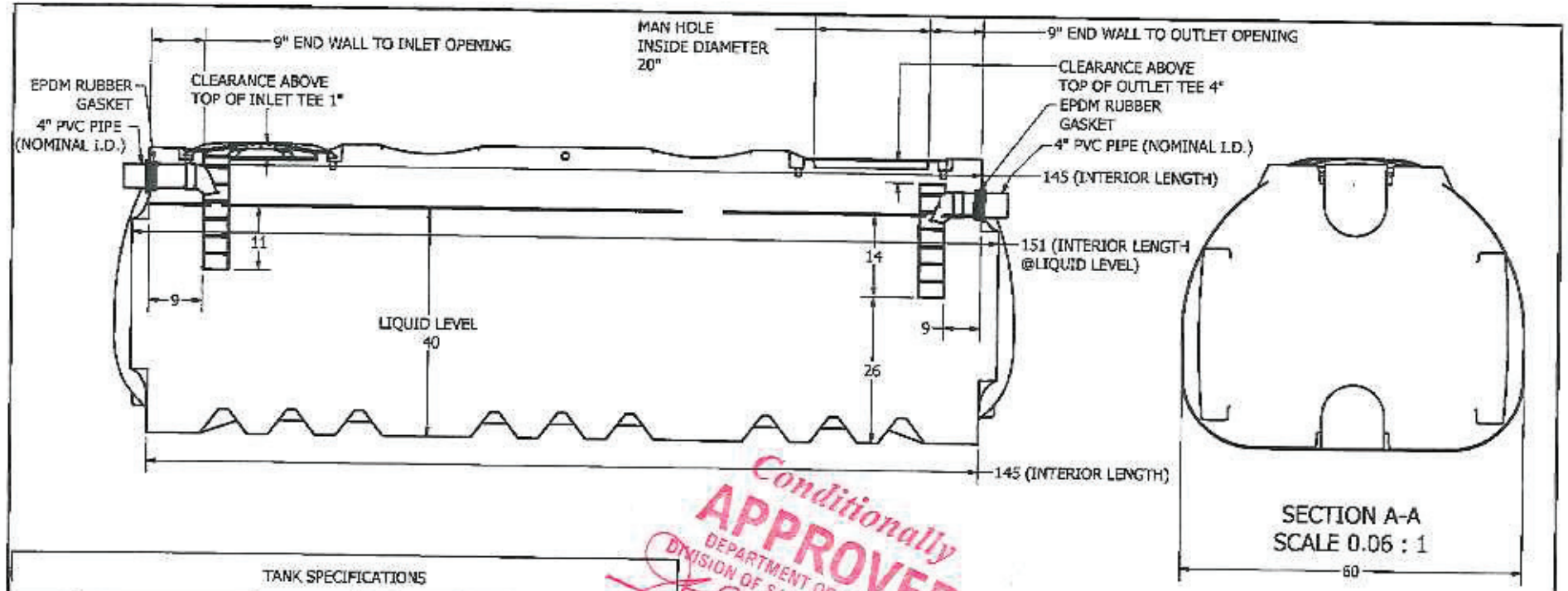

Conditionally APPROVED
DEPARTMENT OF COMMERCE
DIVISION OF SAFETY AND BUILDINGS
SEE CORRESPONDENCE

TANK SPECIFICATIONS	
INTERIOR LENGTH @ TOP	145 IN
INTERIOR LENGTH @ LIQUID LEVEL	151 IN
INTERIOR LENGTH @ BOTTOM	145 IN
INTERIOR WIDTH @ TOP	0 IN
INTERIOR WIDTH @ LIQUID LEVEL	50 IN
INTERIOR WIDTH @ BOTTOM	40 IN
HEIGHT (INTERIOR)	50.5 IN
LIQUID LEVEL	40 IN
WORKING CAPACITY	1250 GALLONS
FREEBOARD	15%
TANK TOP THICKNESS	.25 IN
TANK SIDE THICKNESS	.25 IN
TANK BOTTOM THICKNESS	.25 IN
TANK END THICKNESS	.25 IN

DRAWN Todd Botzer	5/27/2011	NORWESCO, INC., ST. BONIFACIUS, MN
CHECKED		TITLE 1250 GALLON LOW PROFILE SEPTIC TANK WISCONSIN
QA		
MFG		
APPROVED		SIZE B / REV
		SCALE: 1/16 / SHEET 2 OF 2

20130344 A

REVISION HISTORY				
ZONE	REV	DESCRIPTION	DATE	APPROVED

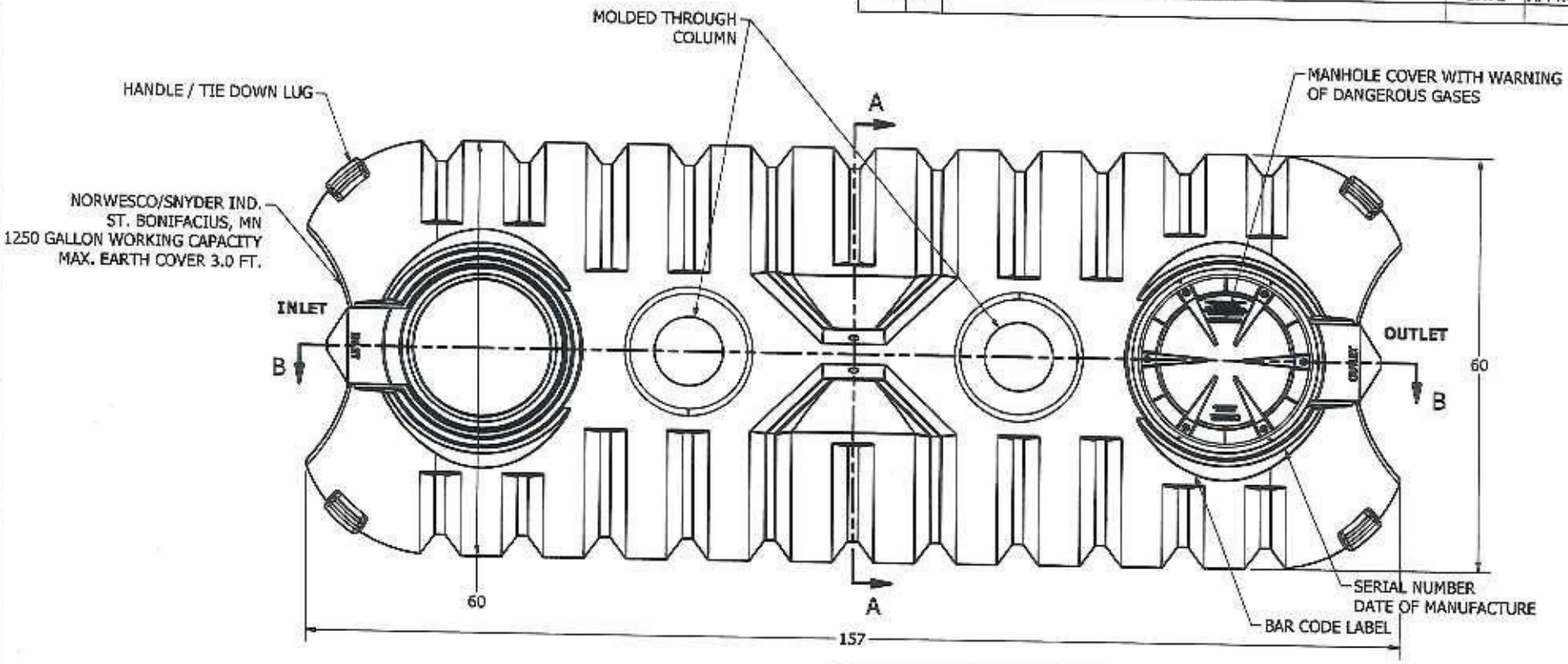

Conditionally
APPROVED
SEE CORRESPONDENCE

DRAWN Todd Bolzer	5/27/2011	NORWESCO, INC., ST. BONIFACIUS, MN
CHECKED		TITLE
QA		1250 GALLON LOW PROFILE HOLDING AND PUMP TANK WISCONSIN
MFG		
APPROVED		SIZE B
		SCALE: 1/16
		SHEET 1 OF 2
		REV

RECEIVED
OCT 21 2013
SAFETY & BUILDINGS

Conditionally APPROVED 20130344A

SEE CORRESPONDENCE

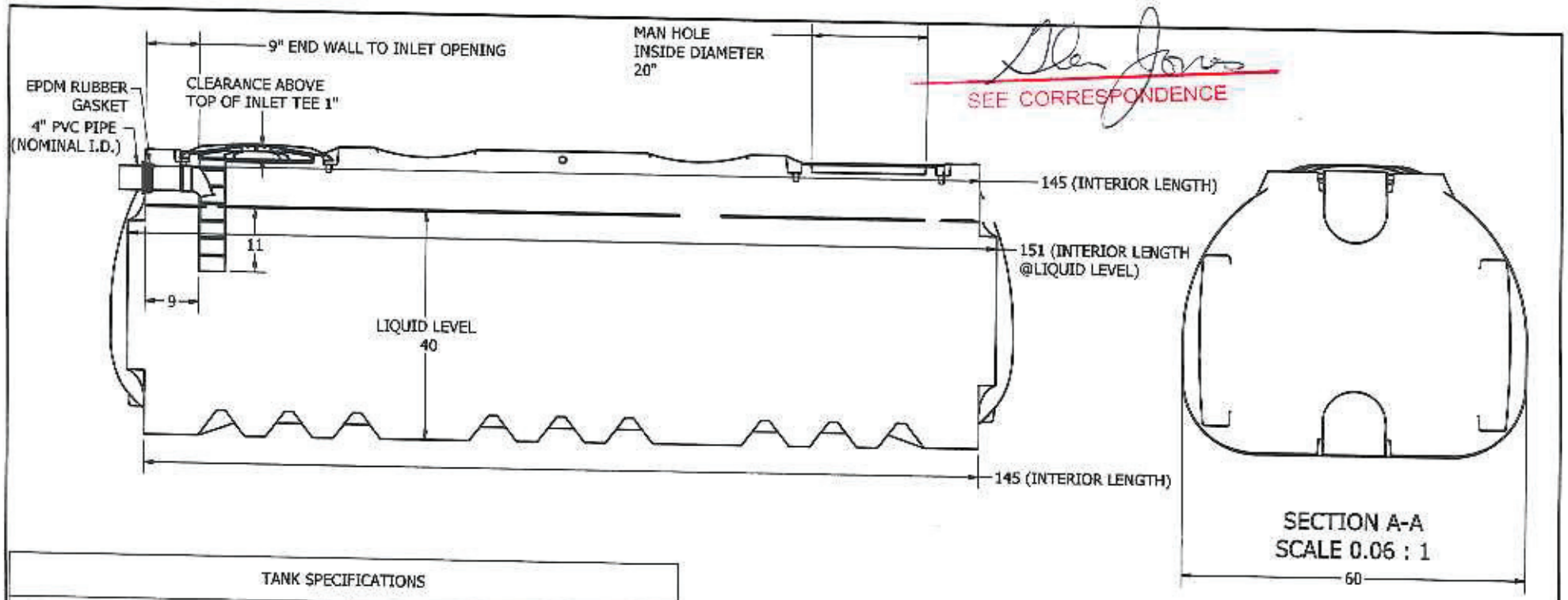

TANK SPECIFICATIONS	
INTERIOR LENGTH @ TOP	145 IN
INTERIOR LENGTH @ LIQUID LEVEL	151 IN
INTERIOR LENGTH @ BOTTOM	145 IN
INTERIOR WIDTH @ TOP	0 IN
INTERIOR WIDTH @ LIQUID LEVEL	50 IN
INTERIOR WIDTH @ BOTTOM	40 IN
HEIGHT (INTERIOR)	50.5 IN
LIQUID LEVEL	40 IN
WORKING CAPACITY	1250 GALLONS
FREEBOARD	15%
TANK TOP THICKNESS	.25 IN
TANK SIDE THICKNESS	.25 IN
TANK BOTTOM THICKNESS	.25 IN
TANK END THICKNESS	.25 IN

DRAWN Todd Bolzer	5/27/2011	NORWESCO, INC., ST. BONIFACIUS, MN
CHECKED		TITLE
QA		1250 GALLON LOW PROFILE HOLDING AND PUMP TANK WISCONSIN
MFG		
APPROVED		SIZE B — REV
		SCALE: 1/16 — SHEET 2 OF 2

RECEIVED
OCT 21 2013
SAFETY & BUILDINGS

Conditionally
APPROVED

20130344A

SEE CORRESPONDENCE

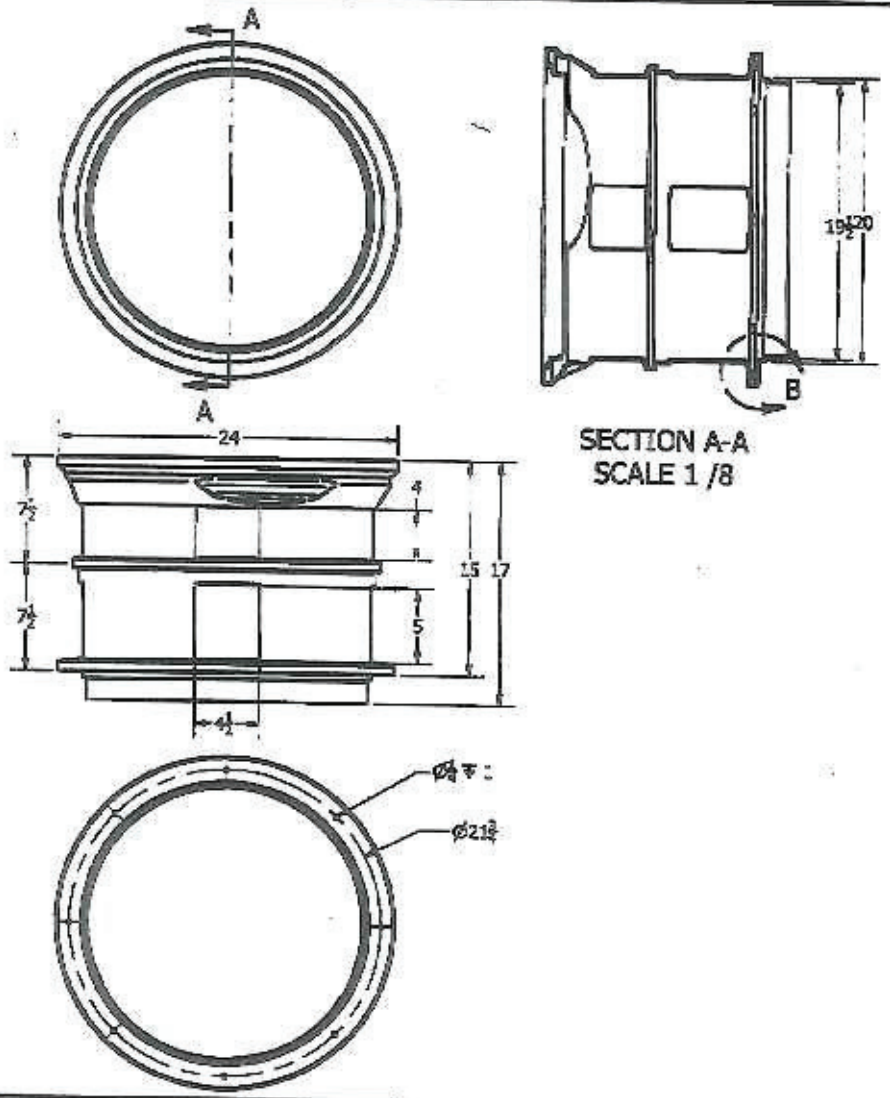

DRAWN Todd Bolzer	5/10/2009	NORWESCO, INC., ST. BONIFACIUS, MN
CHECKED		TITLE
QA		15 INCH LOW PROFILE MAN HOLE EXTENSION
MFG		
APPROVED		SIZE B / DWG NO / REV E
		SCALE: 1/16 / SHEET 1 OF 1

RECEIVED
OCT 21 2013
SAFETY & BUILDINGS