# AL'S 3000 S/P

## 3 Manholes

Model 2250-750 Septic-Pump

2257 Gal. Septic 760 Gal. Pump

20140008

~~20110130~~

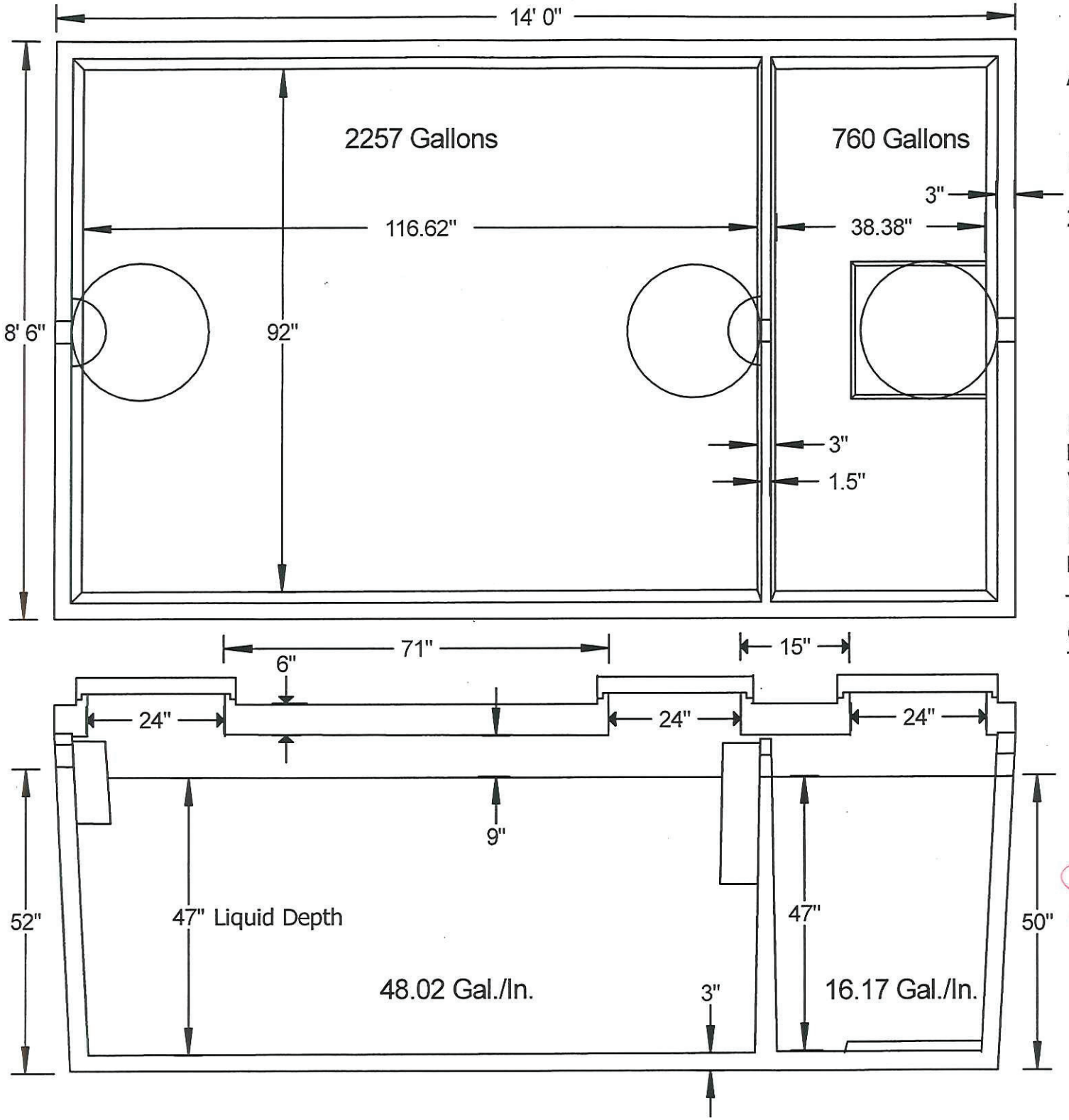


DIMENSIONS:
Length: 14' 0"
Width: 8' 6"
Height: 70"
Below Inlet: 52"
Below Outlet: 50"

Tank Weight: 12912 lbs.
Cover Weight: 8925 lbs.
Total Weight: 21837 lbs.

*Conditionally*
**APPROVED**
DEPARTMENT OF COMMERCE
DIVISION OF SAFETY AND BUILDINGS
SEE CORRESPONDENCE


**AL'S Concrete Products, Inc.**
800 Townhall Road . La Crescent, MN 55947
507-895-4509 1-800-982-9263 507-895-6805 Fax
www.alsconcreteproducts.com

# AL'S 3000 S/S

## 2 Compartment

Model 3000 2 Compartment Septic

3017 Gal. Septic/Septic

20140008
~~20110130~~

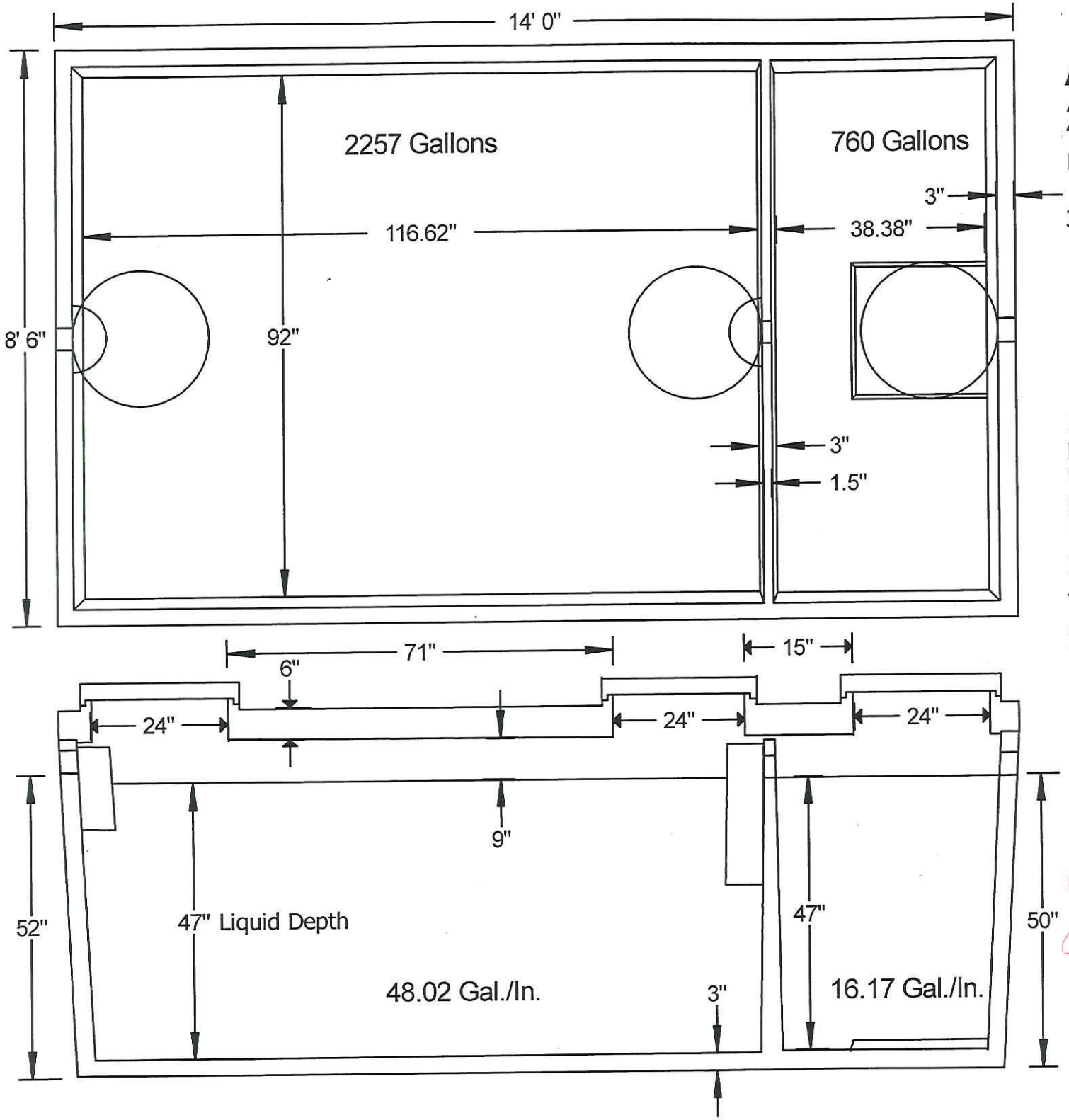


DIMENSIONS:
Length: 14' 0"
Width: 8' 6"
Height: 70"
Below Inlet: 52"
Below Outlet: 50"

Tank Weight: 12912 lbs.
Cover Weight: 8925 lbs.
Total Weight: 21837 lbs.

Conditionally
APPROVED
DEPARTMENT OF COMMERCE
DIVISION OF SAFETY AND BUILDINGS
SEE CORRESPONDENCE


**AL'S Concrete Products, Inc.**
800 Townhall Road . La Crescent, MN 55947
507-895-4509 1-800-982-9263 507-895-6805 Fax
www.alsconcreteproducts.com

# AL'S 3000 S/S/P
## 3 Compartment

Model 2250-750 3 Compartment

Septic-Septic-Pump

~~20110130~~
20140008

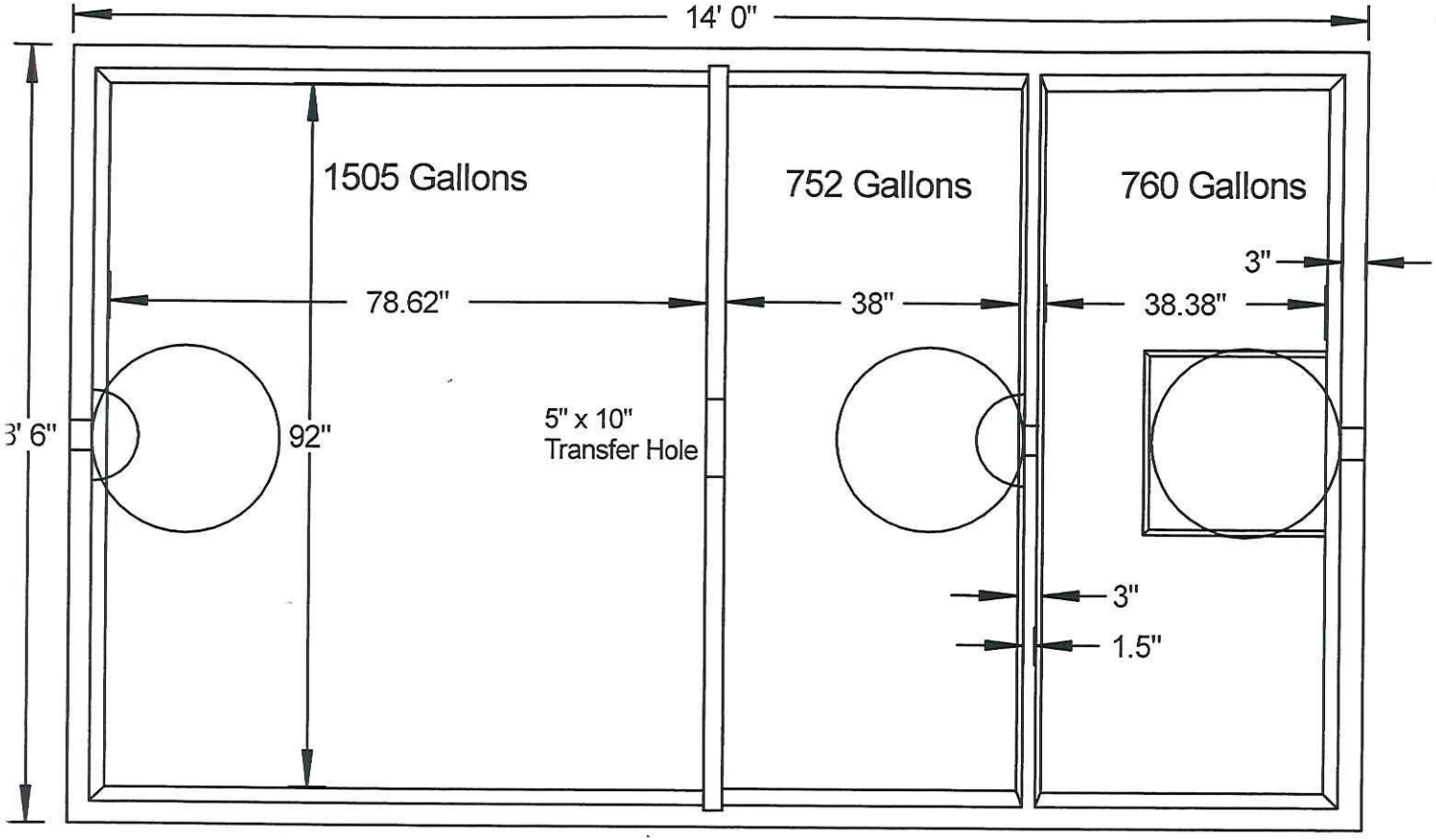


DIMENSIONS:
Length: 14' 0"
Width: 8' 6"
Height: 70"
Below Inlet: 52"
Below Outlet: 50"

Tank Weight: 12912 lbs.
Cover Weight: 8925 lbs.
Total Weight: 21837 lbs.

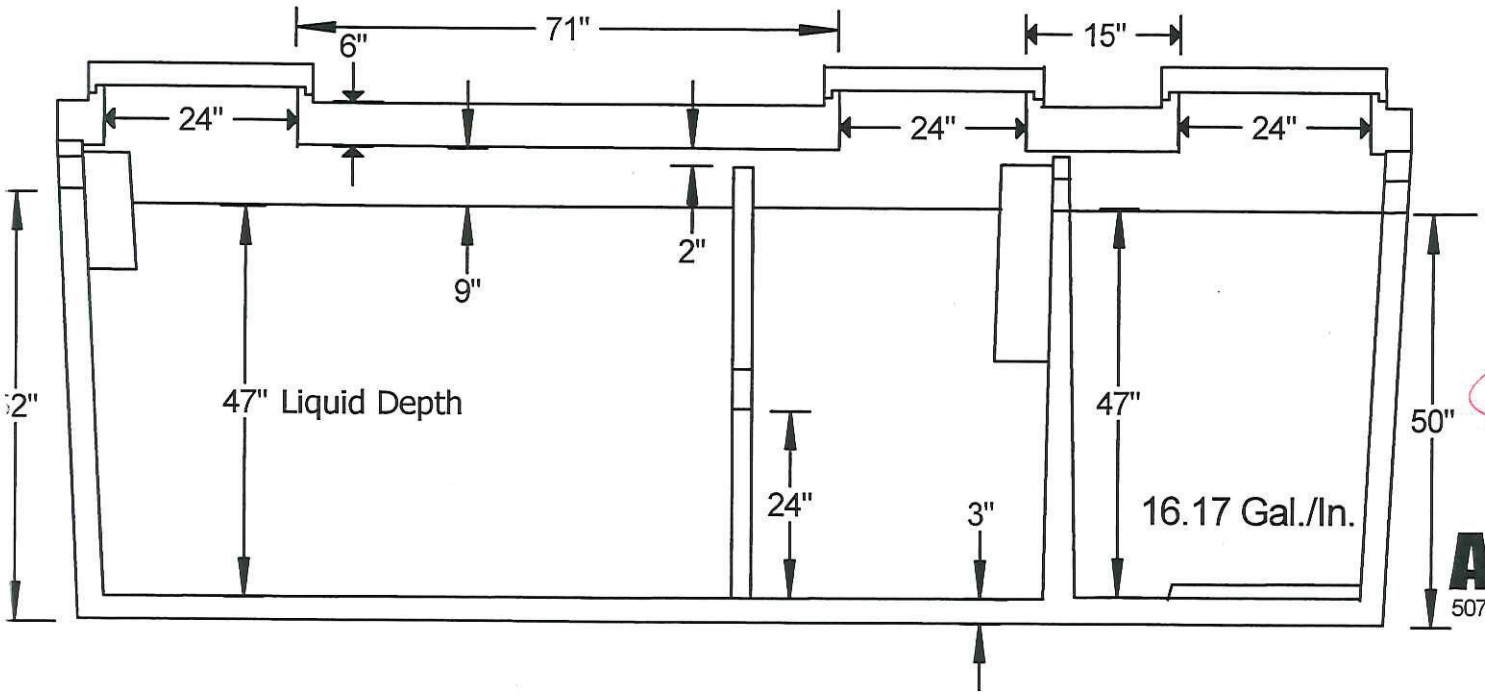


Conditionally
APPROVED
DEPARTMENT OF COMMERCE
DIVISION OF SAFETY AND BUILDINGS
SEE CORRESPONDENCE


**AL'S Concrete Products, Inc.**
800 Townhall Road . La Crescent, MN 55947
507-895-4509 1-800-982-9263 507-895-6805 Fax
www.alsconcreteproducts.com