20140025
~~20090100~~

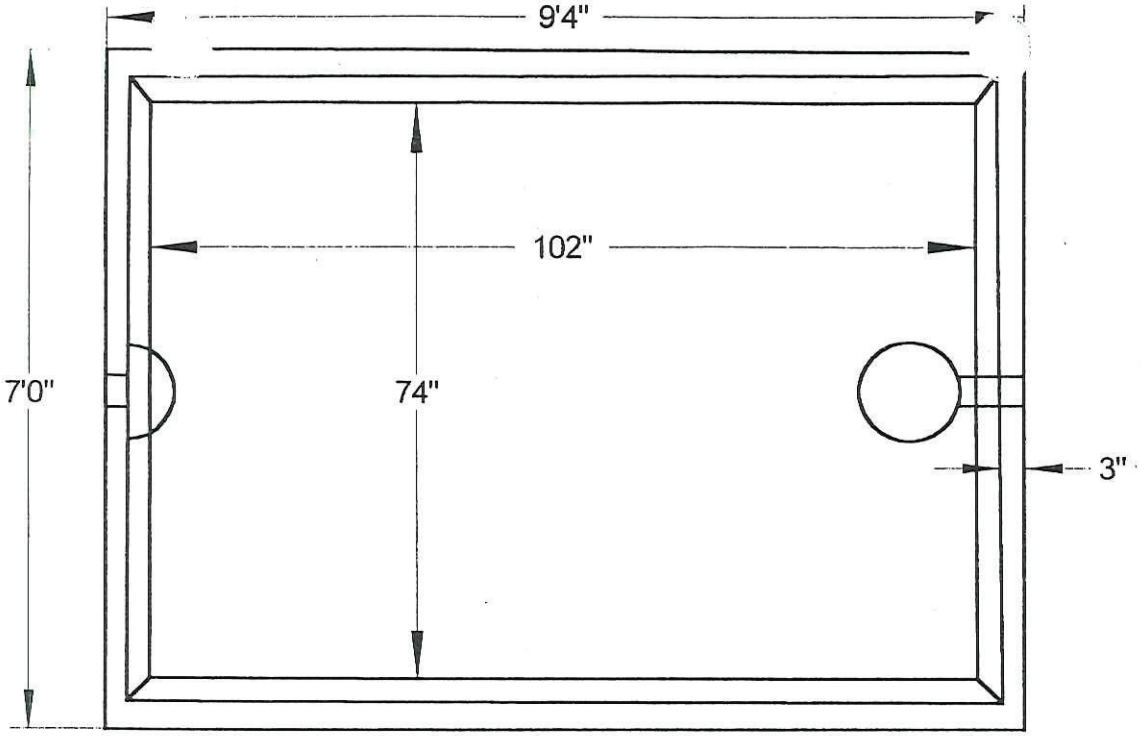

RECEIVED
FEB 25 2009
SAFETY & BLDGS. DIV.

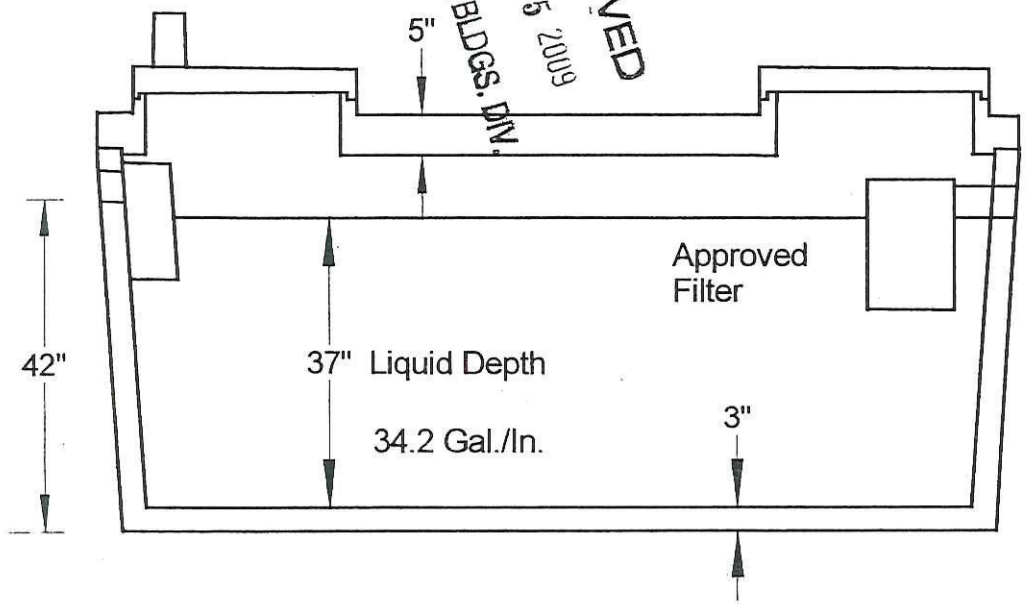

AL'S 1250LP

Model 1250LP Septic, Holding, Pump, Siphon or Grease Interceptor

1265 Gal. Septic 1334 Gal. Holding

606 G.P.D. When Used As A Septic Tank Based On A 3 Yr. Service Interval.

96" Depth Of Bury

DIMENSIONS:
Length: 9'4"
Width: 7'0"
Height: 58"
Below Inlet: 42"
Below Outlet: 40"

Conditionally
APPROVED
DEPARTMENT OF COMMERCE
DIVISION OF SAFETY AND BUILDINGS
SEE CORRESPONDENCE

Tank Weight: 6616 lb.
Cover Weight: 4114 lb.
Total Weight: 10730 lb.

AL'S CONCRETE PRODUCTS
800 Townhall Road, La Crescent, MN 55947
507-895-4509 1-800-982-9263 Fax: 507-895-6805