20140030

TOPICAL VIEW OF TANK USING EZ SET PLASTIC RI
RISERS & CASTING FLANGES

1000 Gal Septic Tank, Pump chamber & Grease Interceptor

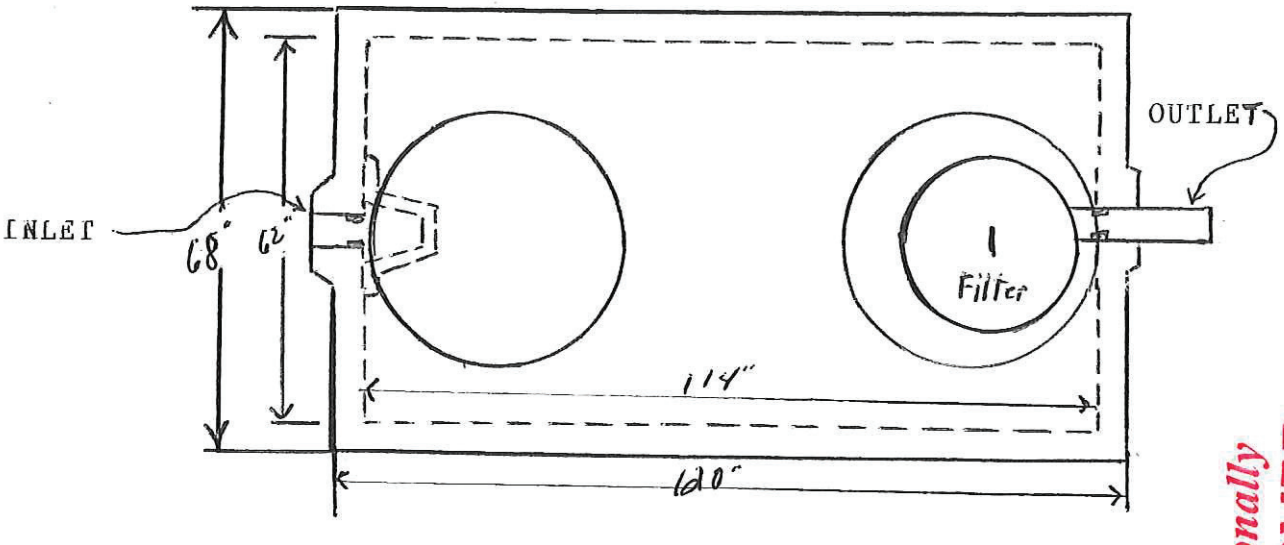

CROSSECTION OF TANK USING EZ
SET RISERS

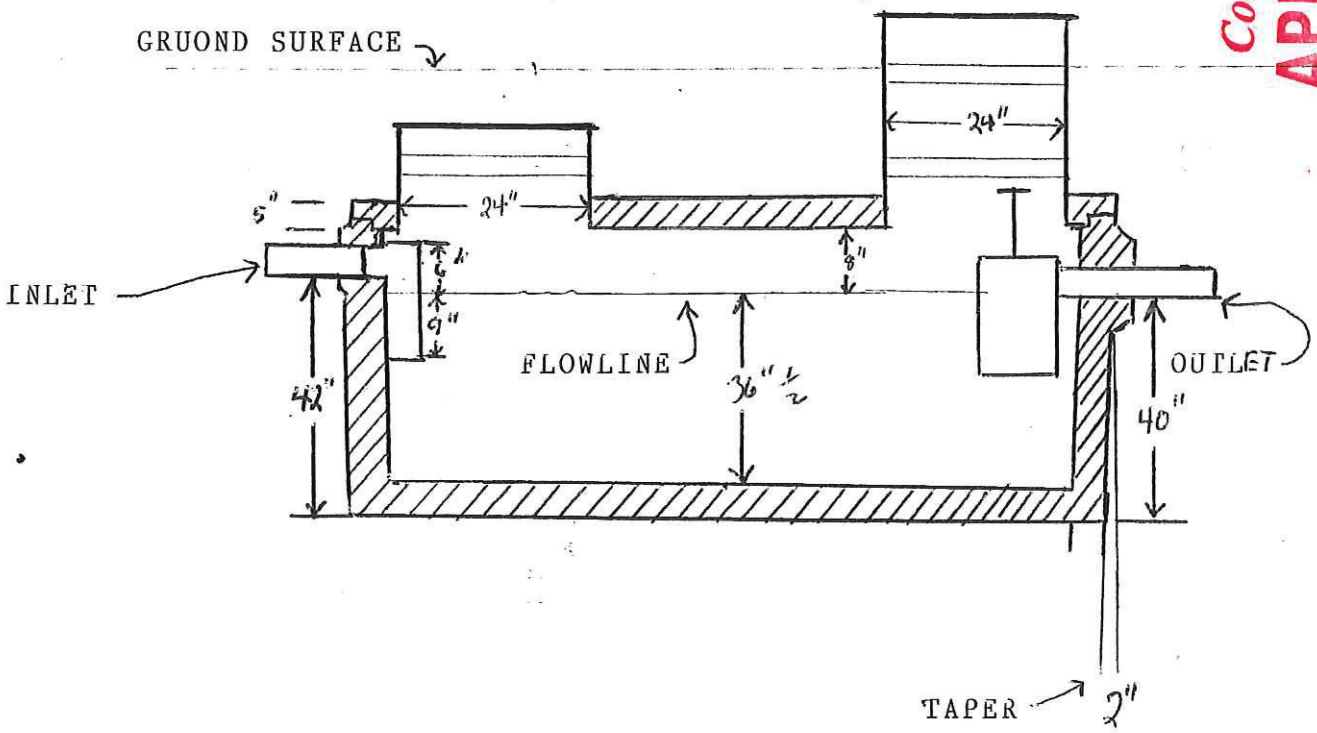

Conditionally APPROVED
SEE CORRESPONDENCE

THICKNESS

COVER	5"
SIDEWALLE	3"
FLOOR	3 1/2"

DRAWINGS BY Dale Greaves
DATE 1/20/14

Tank Cover for Grease Interceptor

20140030

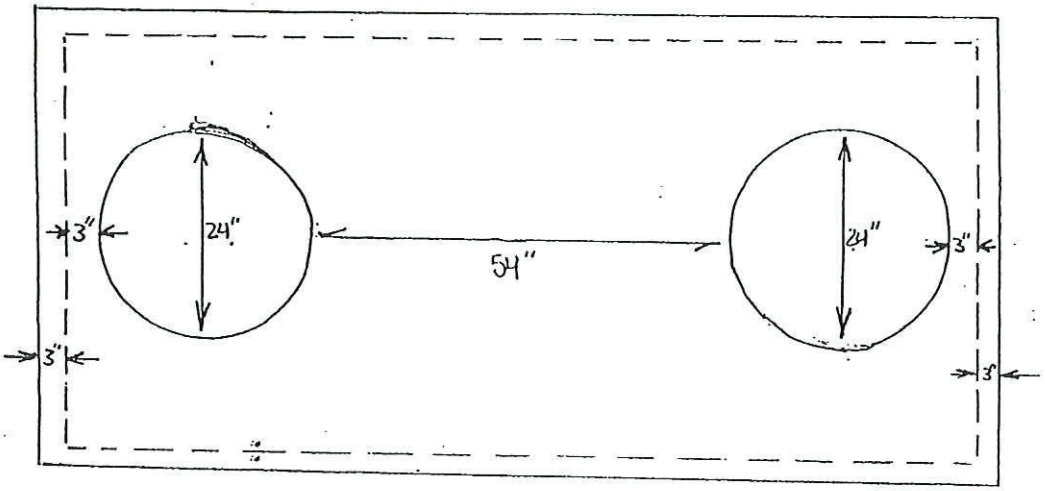

Label for Manhole Covers

Stainless Steel Screws w/anchors Used to attach to covers

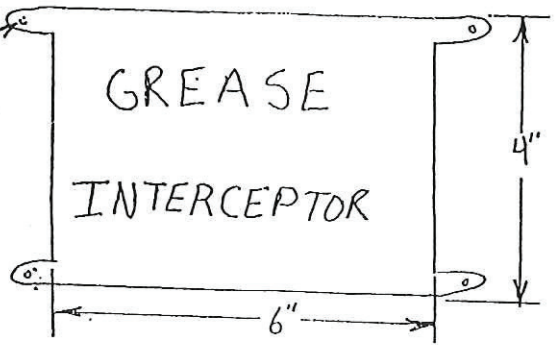

– Label white w/Red Lettering

1000 gal

Conditionally APPROVED

SEE CORRESPONDENCE

Drawing by Dale Greaves

Date 1/20/14