949 Gallon Fast 0.5, 0.75 & 0.9 With 625 Pump

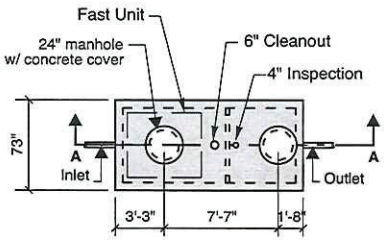

Top View

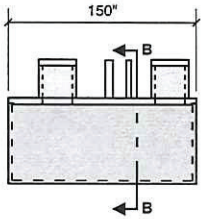

Side View

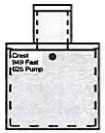

End View

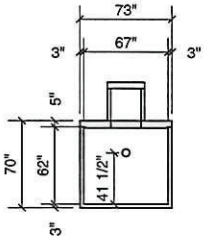

Section B-B

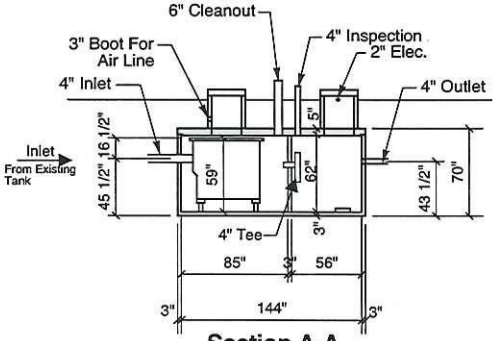

Section A-A

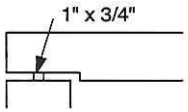

Typical Cover Detail

949 Gallon Fast 0.5, 0.75 & 0.9 W/ 625 Pump

38 1/2" LIQUID LEVEL
45 1/2" INLET
43 1/2" OUTLET
1,574 GALLONS ACTUAL
40.88 GPI TOTAL
84" MAXIMUM BURY
20,000# EMPTY WEIGHT

DESIGN NOTES:
QUALITY CONTROL PROGRAM IN PLACE
W/C RATIO OF .045 OR LESS
5,000 PSI MINIMUM CONCRETE @ 28 DAYS
VACUUM TESTING IS RANDOM BY CREST
TANKS DESIGNED TO WITHSTAND THE PRESSURES TO WHICH
IT WILL BE SUBJECTED PROVIDED INSTALLER TO FOLLOW
CREST BACK FILL AND BEDDING GUIDE #1-17
TANK SIZE MARKED ON OUTLET END

APPLIED REFERENCE NO.
001, 002, 003, 004, 005, 07B, 008, 012
014, 017, 018, 019, 021, 022, 022A, 022B, 023
024 AND MOST RECENT APPROVALS THAT INCLUDE
THE FOLLOWING OPTIONS: FILTERS: DOC APPROVED ZABEL
OR ORENCO MODELS LOCATED AT OUTLET WITH ACCESS OVER FILTERS
PIPE PORTS; 4", 6", OR 8"
RISER OPENINGS: MINIMUM 24" DIAMETER OPTION 35", 48",
OR RECTANGLE / SQUARE WITH MINIMUM 24" CLEAR OPENING

REINFORCEMENT
BOTTOM, TOP & SIDES: 4 x 4 x 4 MESH LOCATED 1 1/4" FROM INSIDE FACE
POST TENSION CABLES ARE CAST INTO BOTTOM TOP & SIDES
FOR ADDITIONAL DESIGN REQIREMENTS

MISC. NOTES
JOINT SEALANT - HIGH GRADE EZ STICK OR CS101
LABELS - WARNING SIGNS LOCATED ON ALL MANHOLES
INSTALLATION - SEE SEPARATE INSTALLATION GUIDE
BAFFLES INSTALLED
PIPE BOOTS ARE ALOK OR PRESS SEAL BRAND

~~20090244~~
20140084

Conditionally
APPROVED
DEPARTMENT OF COMMERCE
DIVISION OF SAFETY AND BUILDINGS
SEE CORRESPONDENCE

Crest Precast, Inc.
La Crescent, MN & Barneveld, WI
800-658-9045

Scale		Drawn By:	KGT
Date 6-25-09		Revision	6-29-09
Project:	Fast Tank / Pump Tank		
Contractor:		Drawing Number	MODEL 949 Fast