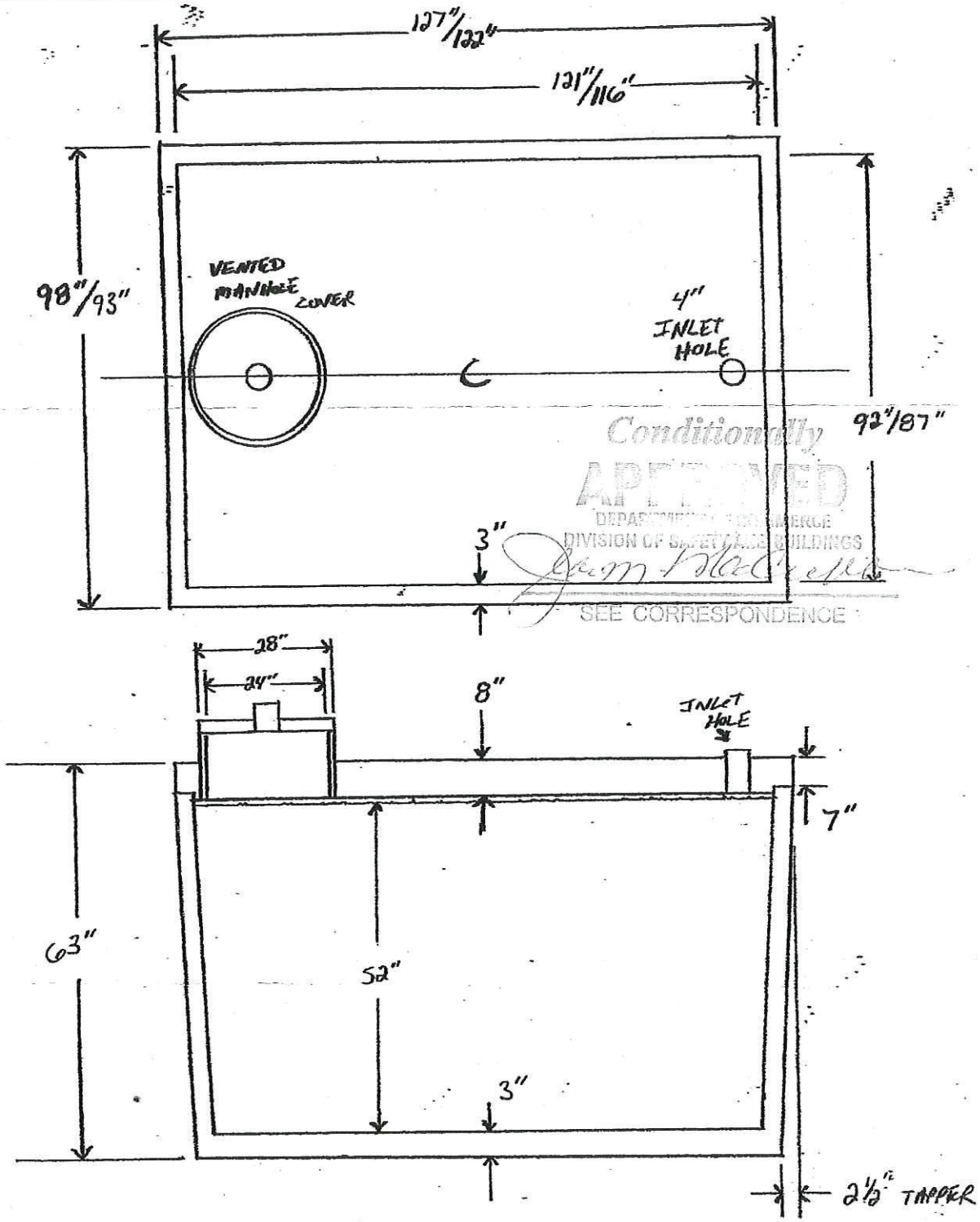

Conditionally APPROVED
DEPARTMENT OF COMMERCE
DIVISION OF SAFETY & BUILDINGS
SEE CORRESPONDENCE

4" PVC COUPLER - CAST INTO TANK COVER FOR INLET HOLE.

THERE ARE 4/9 GAL PER INCH.

~~20090104~~
20140121

NOT TO SCALE

MIDWAY CONCRETE CORP	
2500 GAL. HOLDING TANK	
BY: NEAL A. LITZ	DATE: 2-20-09

RECEIVED
APR 08 2014
SAFETY & BUILDINGS