INLET PIPE INVERT:	XX.XX
INLET PIPE ID AND MATERIAL:	XX.XX
OUTLET PIPE INVERT:	XX.XX
OUTLET PIPE ID AND MATERIAL:	XX.XX
PRIMARY MANHOLE RIM ELEVATION:	XX.XX
STORAGE MANHOLE RIM ELEVATION:	XX.XX
ORIENTATION (RIGHT OR LEFT):	R L

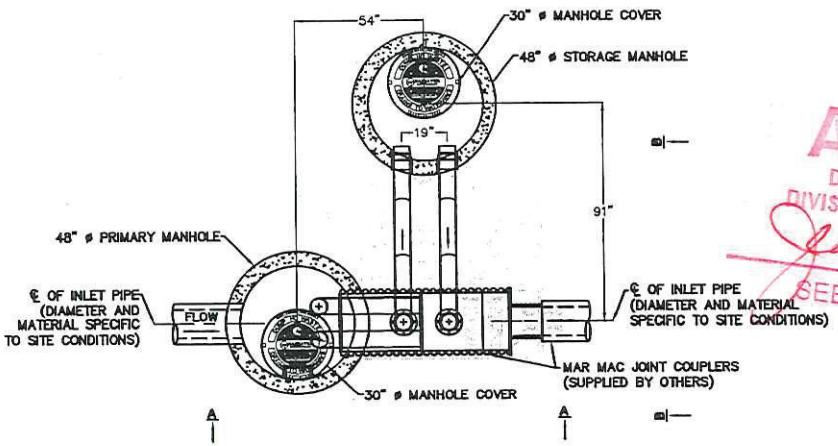

PLAN VIEW-BAYSAVER SEPARATION SYSTEM
(LEFT HAND ORIENTATION SHOWN)

Conditionally APPROVED
DEPARTMENT OF COMMERCE
DIVISION OF SAFETY AND BUILDING
SEE CORRESPONDENCE

GENERAL NOTES:

1. MANHOLES SHOWN REPRESENT STANDARD PRECAST STRUCTURES PROVIDED BY OTHERS.
2. SEAL THE CONNECTING PIPES INTO THE STORAGE MANHOLE USING RUBBER BOOTS/GASKETS.
3. THE BAYSAVER SEPARATION SYSTEM INCLUDES THE SEPARATOR UNIT, (2) CONNECTING PIPES AND (2) FERNCO COUPLERS.
4. LEFT HAND ORIENTATION SHOWN. FOR RIGHT HAND ORIENTATION ROTATE STORAGE MANHOLE AND CONNECTING PIPES 180°.
5. SEE BAYSAVER SPECIFICATIONS AND INSTALLATION INSTRUCTIONS FOR FURTHER DETAIL.
6. USE NON-SHRINK GROUT TO SEAL THE INLET PIPE AND BAYSEPARATOR IN TO THE PRIMARY MANHOLE.
7. BACKFILL: CLASS I, II OR III BACKFILL SHOULD BE USED TO AN ELEVATION OF AT LEAST 6" OVER THE CROWN OF THE SEPARATOR UNIT.
8. 12" COVER REQUIRED FOR TRAFFIC RATED SURFACE.
9. BAYSEPARATOR IS PROTECTED BY US PATENT NO. 5,746,911

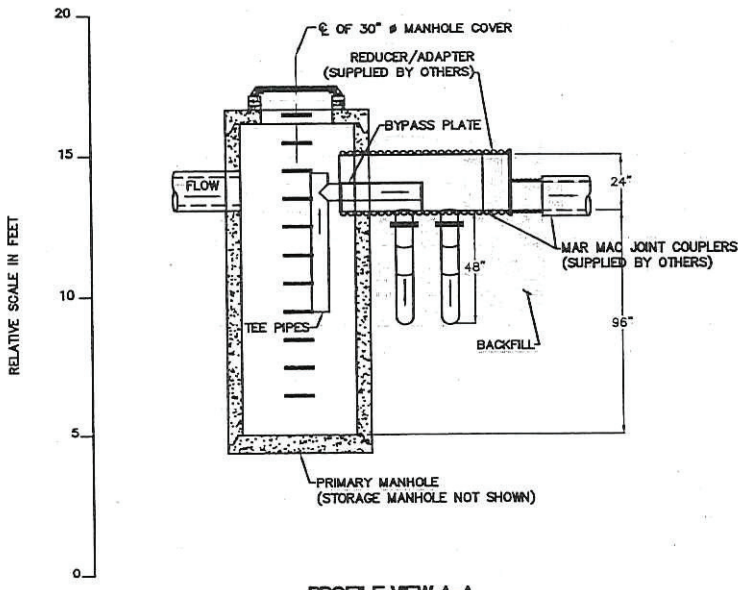

PROFILE VIEW A-A

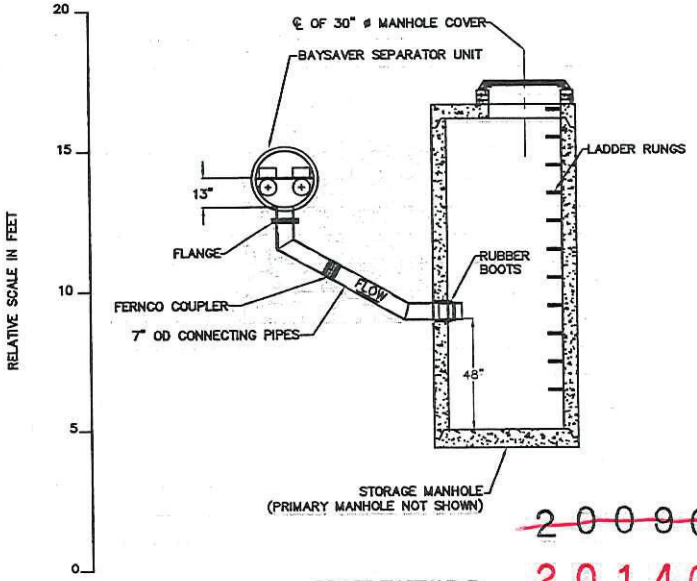

PROFILE VIEW B-B

~~20090042B~~
20140132

REV	DESCRIPTION	DATE	APPR	NOTES:

BAYSAVER TECHNOLOGIES, INC.
Engineering Stormwater Solutions
www.BaySaver.com 800.229.7283

DESIGNED:	TEP	DATE:	10/17/08
DRAWN:	EKH	SCALE:	N.T.S.
CHECKED:	EKH	DWG NO:	1K

1K BAYSEPARATOR™
GENERAL SYSTEM DETAILS