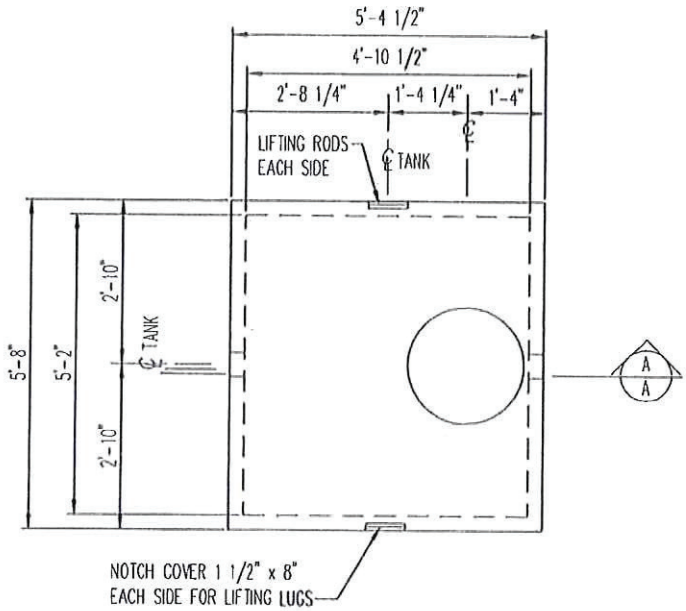

625 GALLON TANK
1/2" = 1'-0"

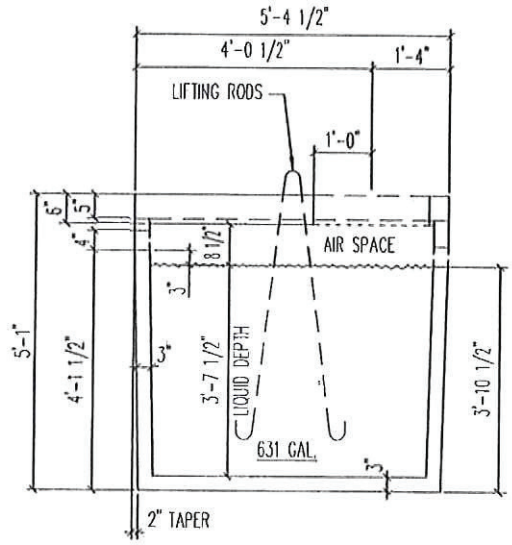

A/A SECTION
1/2" = 1'-0"

20140148

Conditionally APPROVED
SEE CORRESPONDENCE

NOTE:
1. PROVIDE MINIMUM 1" CLEAR BETWEEN TOP OF BAFFLE AND UNDERSIDE OF LID.

RECEIVED
APR 22 2014
SAFETY & BUILDINGS

625 GALLON PUMP TANK (625 PT)	Brown Wilbert	WEIGHT=6280# MAX. SOIL COVER= 7'-0"