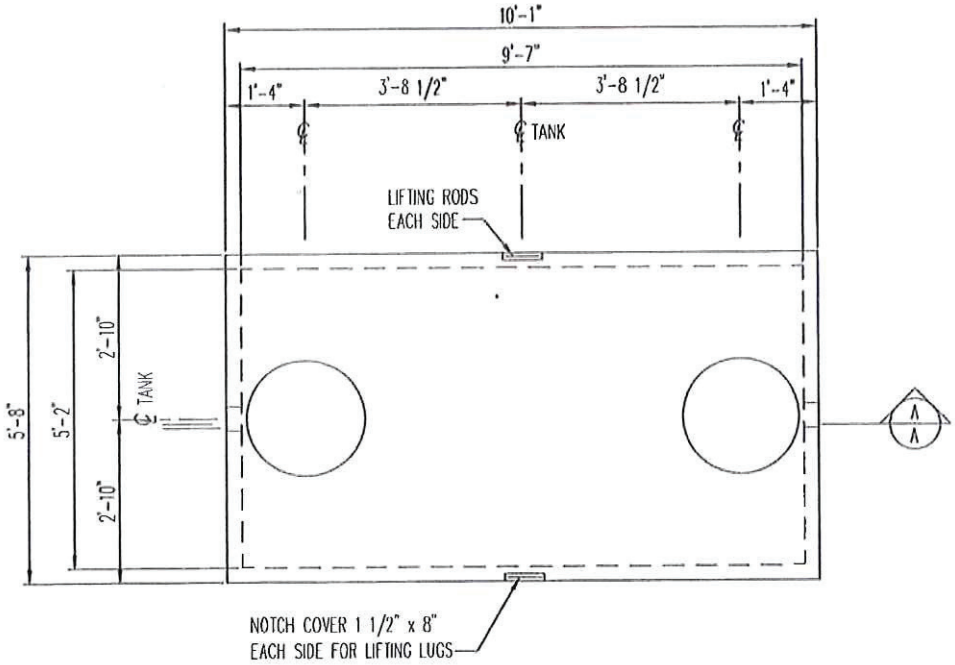

1250 GALLON TANK

1/2" = 1'-0"

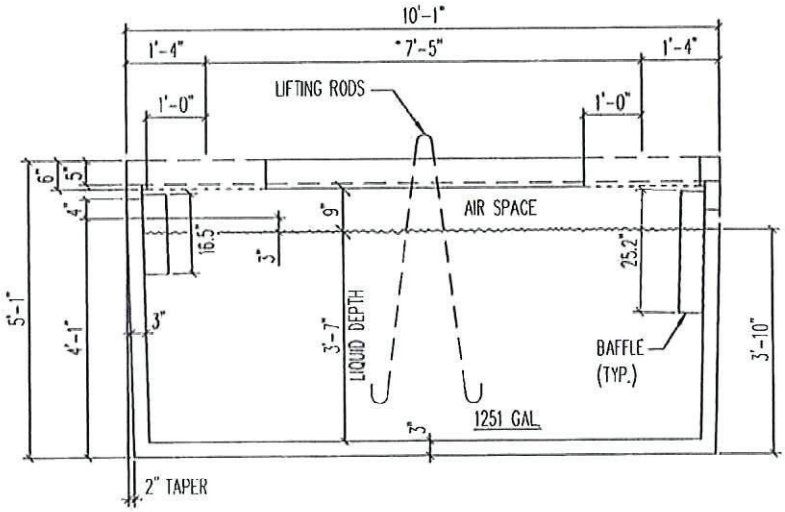

A/A · SECTION

1/2" = 1'-0"

NOTE:

1. PROVIDE MINIMUM 1" CLEAR BETWEEN TOP OF BAFFLE AND UNDERSIDE OF LID.
2. PUMP TANK (PT) HAS NO OUTLET BAFFLE.

Conditionally APPROVED

SEE CORRESPONDENCE

RECEIVED

APR 22 2014

SAFETY & BUILDINGS

1250 GALLON SEPTIC OR PUMP TANK (1250 ST OR 1250 PT)	Brown Wilbert	WEIGHT=10,800# MAX. SOIL COVER= 7'-0"

20140151

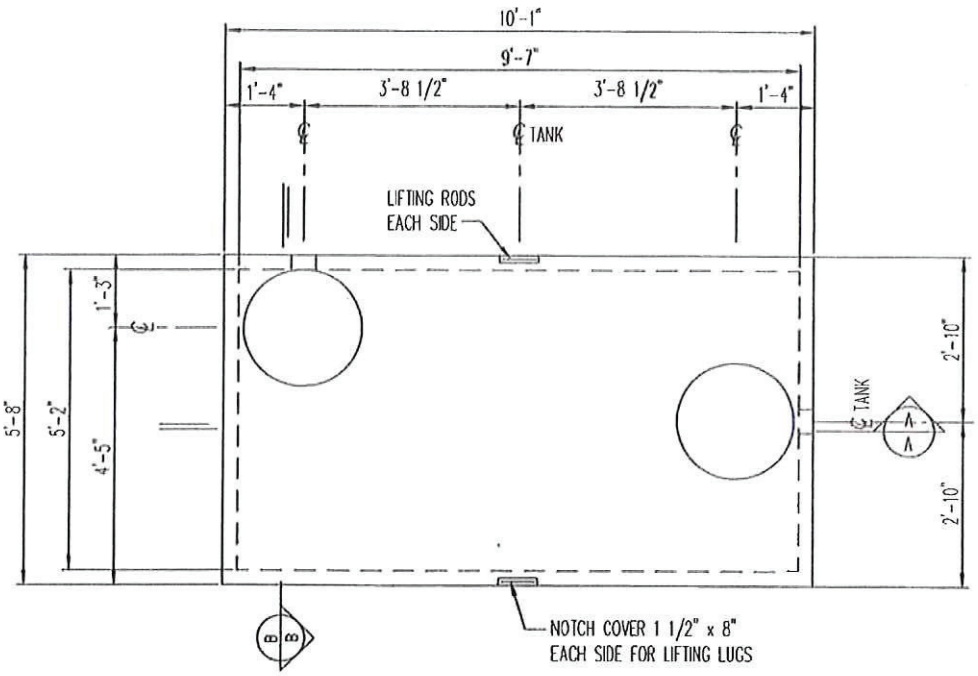

1250 GALLON TANK

1/2" = 1'-0"

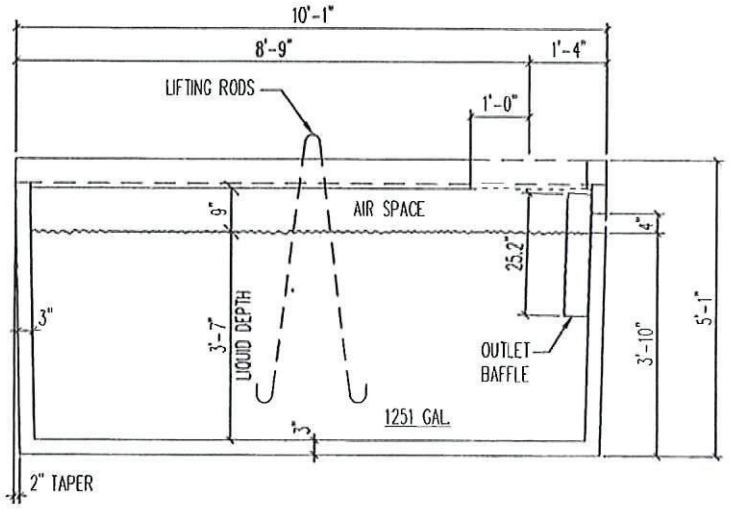

A/A SECTION

1/2" = 1'-0"

Conditionally APPROVED

SEE CORRESPONDENCE

NOTE:

1. PROVIDE MINIMUM 1" CLEAR BETWEEN TOP OF BAFFLE AND UNDERSIDE OF LID.
2. PUMP TANK (PT) HAS NO OUTLET BAFFLE.

RECEIVED

APR 22 2014

SAFETY & BUILDINGS

1250 GALLON SEPTIC OR PUMP TANK (1250 ST-L OR 1250 PT-L)	Brown Wilbert	WEIGHT=10,800# MAX. SOIL COVER= 7'-0"

20140151

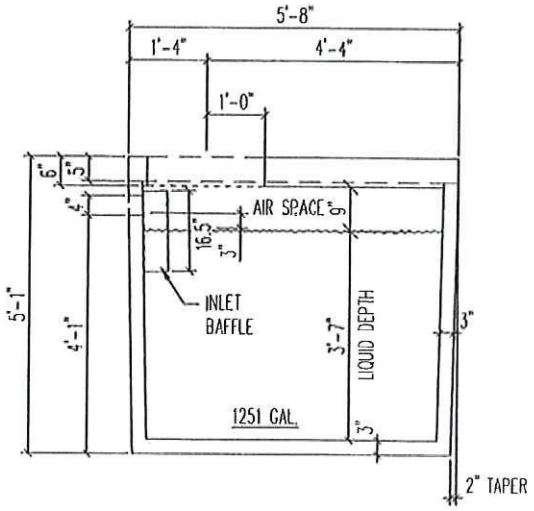

B/B SECTION
1/2" = 1'-0"

Conditionally APPROVED
SEE CORRESPONDENCE

NOTE:
1. PROVIDE MINIMUM 1" CLEAR BETWEEN TOP OF BAFFLE AND UNDERSIDE OF LID.
2. PUMP TANK (PT) HAS NO OUTLET BAFFLE.

RECEIVED
APR 22 2014
SAFETY & BUILDINGS

1250 GALLON SEPTIC OR PUMP TANK (1250 ST-L OR 1250 PT-L)	Brown Wilbert	WEIGHT=10,800# MAX. SOIL COVER= 7'-0"

20140151

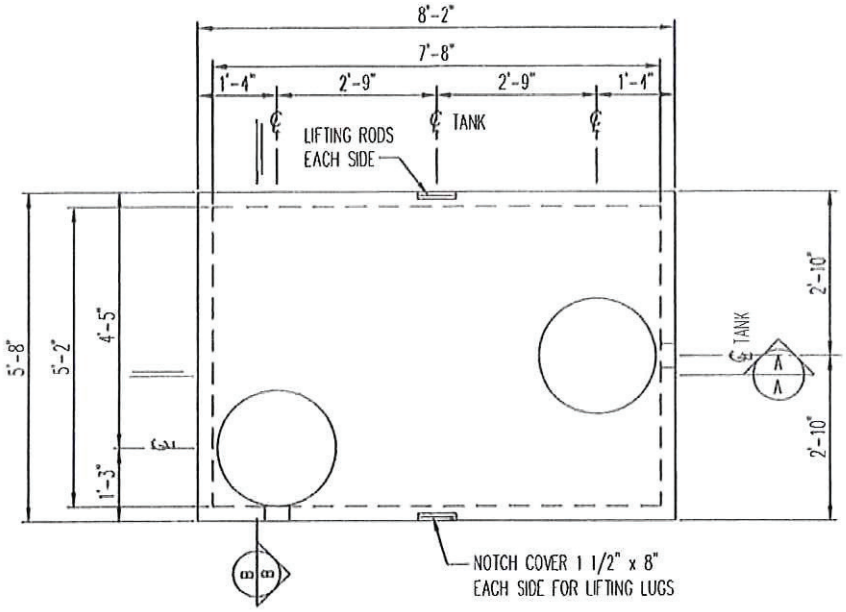

1000 GALLON TANK

1/2" = 1'-0"

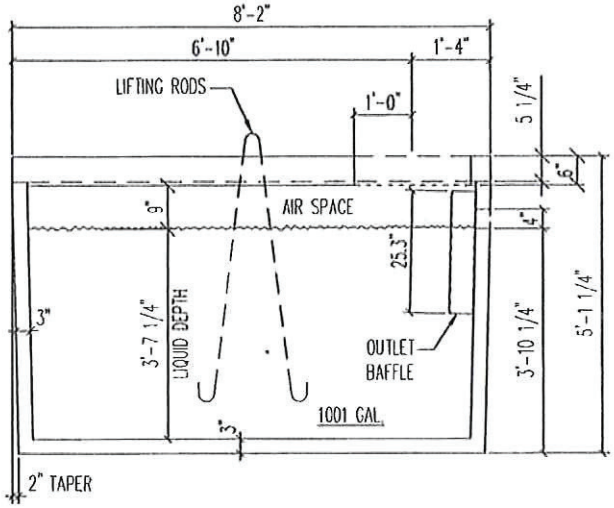

A/A SECTION

1/2" = 1'-0"

Conditionally APPROVED

SEE CORRESPONDENCE

NOTE:

1. PROVIDE MINIMUM 1" CLEAR BETWEEN TOP OF BAFFLE AND UNDERSIDE OF LID.
2. PUMP TANK (PT) HAS NO OUTLET BAFFLE.

RECEIVED
APR 22 2014
SAFETY & BUILDINGS

1000 GALLON SEPTIC OR PUMP TANK (1000 ST-R OR 1000 PT-R)	Brown Wilbert	WEIGHT=8650# MAX. SOIL COVER= 7'-0"

20140151

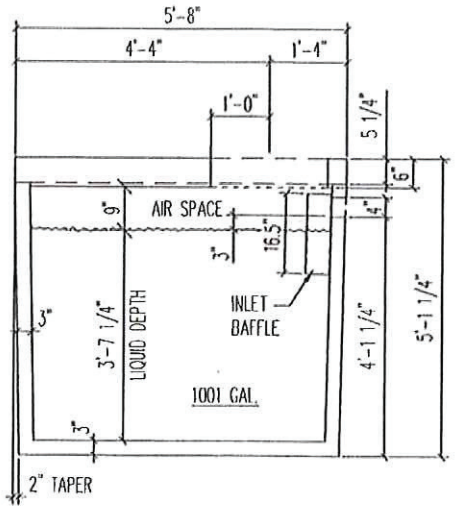

B/B **SECTION**
1/2" = 1'-0"

Conditionally APPROVED
SEE CORRESPONDENCE

NOTE:
1. PROVIDE MINIMUM 1" CLEAR BETWEEN TOP OF BAFFLE AND UNDERSIDE OF LID.
2. PUMP TANK (PT) HAS NO OUTLET BAFFLE.

RECEIVED
APR 22 2014
SAFETY & BUILDINGS

1000 GALLON SEPTIC OR PUMP TANK (1000 ST-R OR 1000 PT-R)	Brown Wilbert	WEIGHT=8650# MAX. SOIL COVER= 7'-0"

20140151