20140210

~~20090208~~

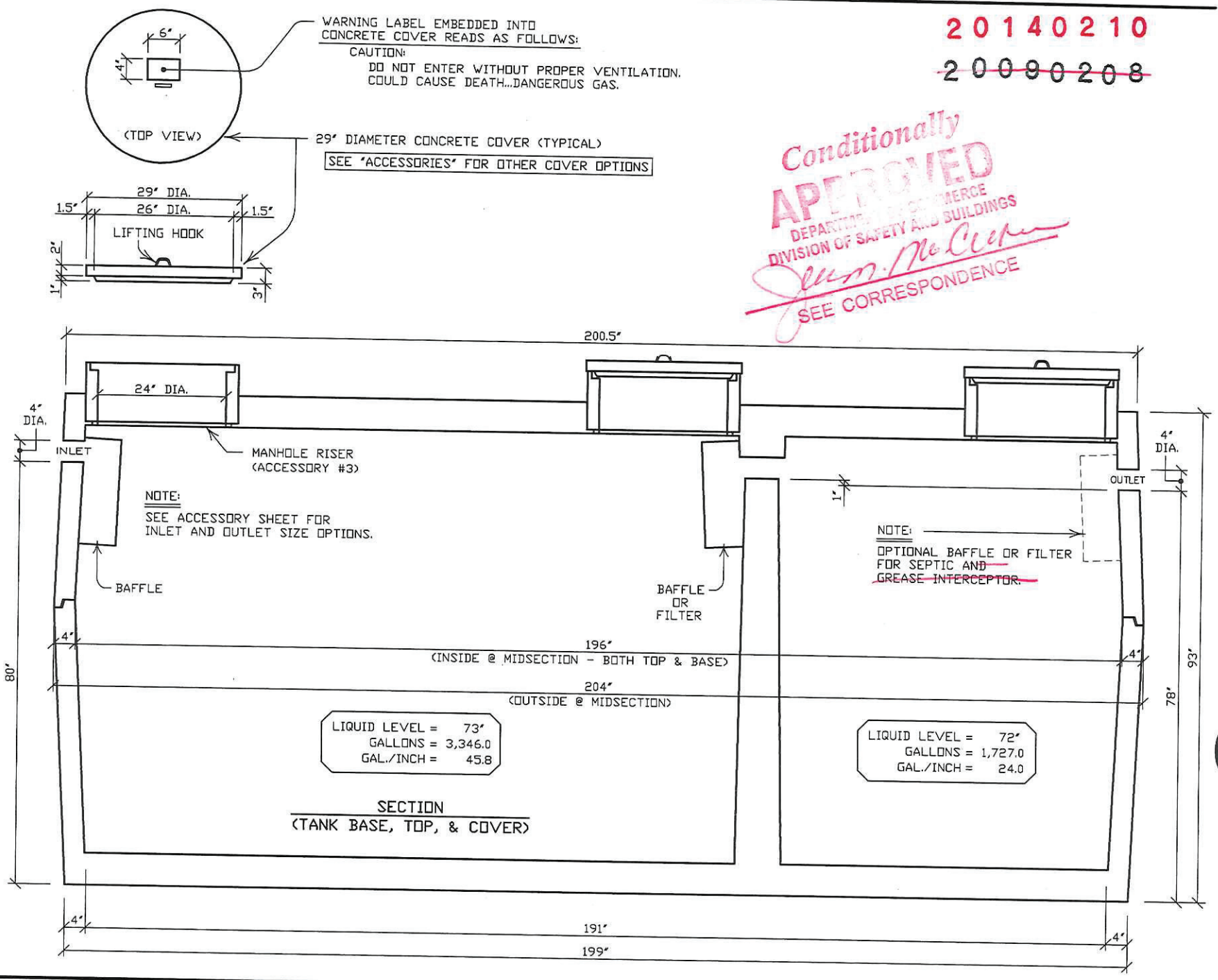

Conditionally APPROVED
DEPARTMENT OF COMMERCE
DIVISION OF SAFETY AND BUILDINGS
SEE CORRESPONDENCE

N.P.C.A. CERTIFIED PLANT & MEMBER OF: NATIONAL & WISCONSIN PRECAST CONCRETE ASSOCIATIONS

THIS DRAWING SHALL NOT BE COPIED OR SUBMITTED TO OTHERS WITHOUT THE CONSENT OF THIS COMPANY.

HUFFCUTT CONCRETE, INC
4154 123rd STREET
CHIPPEWA FALLS, WI 54729
(715) 723-7446 * (800) 924-1516
FAX (715) 723-7111 * www.huffcutt.com

TANK:
3,300/1,700 GALLON
SEPTIC, PUMP, HOLDING,
& GREASE INTERCEPTOR

SIPHON
SEPTIC/SEPTIC, SEPTIC/PUMP, SEPTIC/SIPHON, HOLDING

TANK:
3,300/1,700 GALLON
SEPTIC, PUMP, HOLDING,
& GREASE INTERCEPTOR

HUFFCUTT CONCRETE, INC
4154 123rd STREET
CHIPPEWA FALLS, WI 54729
(715) 723-7446 * (800) 924-1516
FAX (715) 723-7111 * www.huffcutt.com

THIS DRAWING SHALL NOT BE COPIED OR SUBMITTED TO OTHERS WITHOUT THE CONSENT OF THIS COMPANY.

N.P.C.A. CERTIFIED PLANT
&
MEMBER OF:
NATIONAL & WISCONSIN PRECAST CONCRETE ASSOCIATIONS

20140210
~~20090208~~

OUTLET SIDE ELEVATION
(TANK BASE, TOP, & COVER)

20140210 ~~20090208~~

TANK SPECIFICATIONS:

1. 2" MINIMUM CLEARANCE BETWEEN TOP OF BAFFLE AND BOTTOM OF COVER.
2. OPTIONAL OPENING FOR INLET AND OUTLET USING 4", 6", OR 8" DIAMETER PVC OR CAST IRON PIPE. (SAME SIZE ON EACH SIDE)
3. OPTIONAL OPENING IN BOTTOM OF TANK USING 4", 6", OR 8" DIAMETER PVC OR CAST IRON PIPE. (FOR HOLDING TANKS ONLY)
4. TYPICAL COVER & TOP OF TANK JOINT

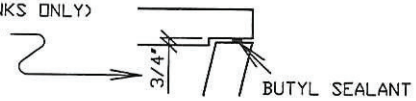

5. ~~TANK USED AS GREASE INTERCEPTOR:~~
   - THE WARNING LABEL ON ACCESSORY ITEM #1 IS ACCOMPANIED BY AN IDENTICAL SIZED LABEL READING "GREASE INTERCEPTOR".
   - INLET BAFFLE EXTENDS 1/3 BELOW WATERLINE AND OUTLET BAFFLE EXTENDS 2/3 BELOW WATERLINE.
   - TOP OF INLET AND OUTLET BAFFLES ARE LOCATED 2" BELOW BOTTOM OF TANK COVER.
   - HEIGHT OF INLET AND OUTLET BAFFLES ABOVE LIQUID LEVEL IS 6".
6. TANK USED AS HOLDING TANK:
   - 12" MANHOLE RISER (ACCESSORY ITEM #3) IS CAST INTO THE COVER, IN PLACE OF ONE OF THE OPENINGS.
   - CONCRETE ADHERES TO COARSE SURFACE OF MANHOLE, AS WELL AS LOWER TONGUE & GROOVE.
   - VENT OR OBSERVATION HOLE IN PLACE OF THE OTHER OPENING. (ACCESSORY ITEM #6)
   - OUTLET TO BE PLUGGED BY APPROVED MEANS.
7. MINIMUM CONCRETE COMPRESSIVE STRENGTH FOR THE TANK BASE & COVER, AND MANHOLE RISER & COVER IS 4,000 PSI.
8. SCH. 40 PVC OR CAST IRON PIPE, WHEN USED, WILL CONFORM TO SPS ~~ILHR~~ TABLES 384.30-1&2 OF THE WISCONSIN ADMINISTRATIVE CODE.
9. SEALANT FOR TANK COVER AND MANHOLE RISERS IS CONSEAL CS-101.

ACCESSORY ITEM #1 — 29" DIAMETER CONCRETE COVER

ALUMINUM WARNING LABEL (RED LETTERS ON WHITE) EMBEDDED INTO CONCRETE COVER READS AS FOLLOWS:

CAUTION:
DO NOT ENTER WITHOUT PROPER VENTILATION.
COULD CAUSE DEATH...DANGEROUS GAS.

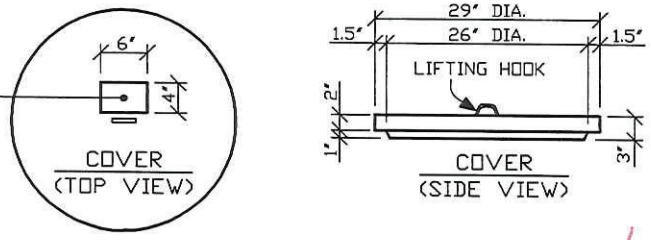

NOTE:
CAN BE USED AS A LOCK DOWN COVER BY PLACING A CHAIN, OR CABLE, THROUGH THE LIFTING HOOK AND LOCKING IT TO THE MANHOLE (ACCESSORY ITEM #3) WHERE INSERTS, LOCATED ON EACH SIDE OF THE MANHOLE, ALLOW A CHAIN LINK OR CABLE LOOP TO BE BOLTED TO IT.

ACCESSORY ITEM #2 — 29" DIAMETER CONCRETE COVER WITH 4" DIA. PIPE

- DIMENSIONS SAME AS ACCESSORY ITEM #1.
- WHEN SCH. 40 PIPE IS USED, IT WILL BE GROOVED OR SCORED TO INSURE ITS BOND WITH THE CONCRETE.

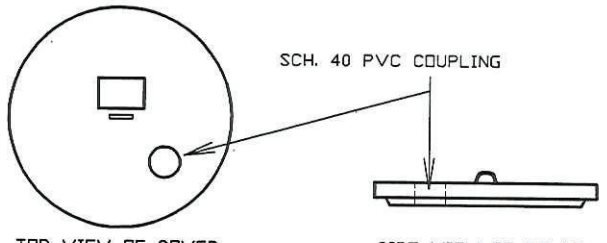

ACCESSORY ITEM #3 — MANHOLE RISER

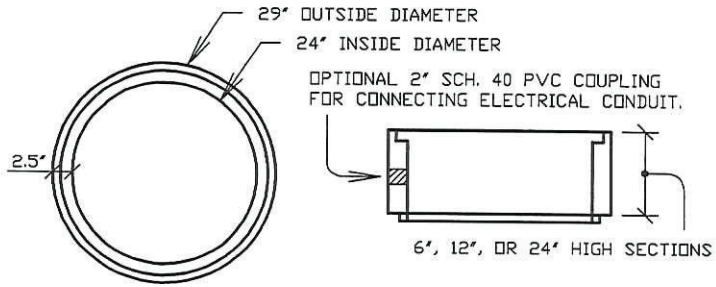

ACCESSORY ITEM #4 — METAL LOCK DOWN COVER

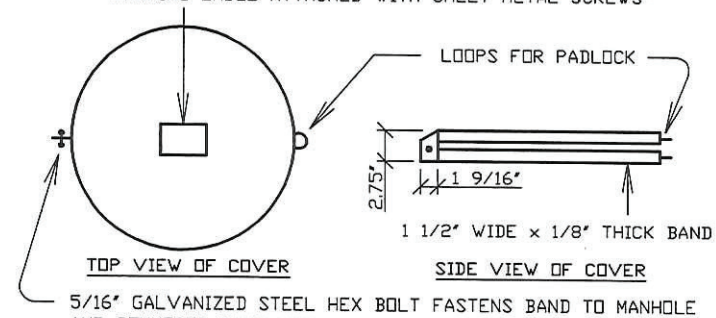

NOTE:
COVER & BAND COATED WITH GRAY, ANTI-RUST ENAMEL PAINT. (UNIT BOLTS TO ACCESSORY ITEM #3)

N.P.C.A. CERTIFIED PLANT & MEMBER OF: NATIONAL & WISCONSIN PRECAST CONCRETE ASSOCIATIONS

THIS DRAWING SHALL NOT BE COPIED OR SUBMITTED TO OTHERS WITHOUT THE CONSENT OF THIS COMPANY.

HUFFCUTT CONCRETE, INC
4154 123rd STREET
CHIPPEWA FALLS, WI 54729
(715) 723-7446 * (800) 924-1516
FAX (715) 723-7111 * www.huffcutt.com

TANK ACCESSORIES

20140210 ~~20090208~~

ACCESSORY ITEM #5 — BAFFLE

- BAFFLE IS ATTACHED BY (4) 1/4" x 1 1/2" RAWL NYLON NAIL ANCHORS
- BAFFLE MADE OF POLYETHYLENE MATERIAL

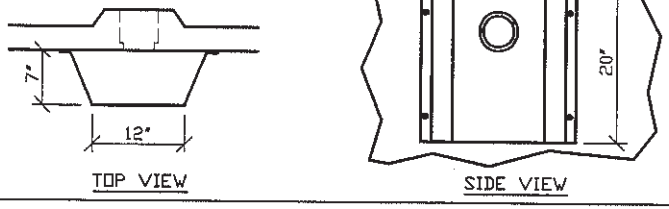

ACCESSORY ITEM #6 — BOSS STOP

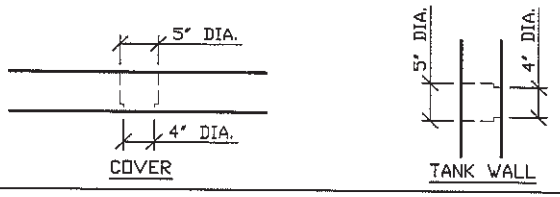

ACCESSORY ITEM #7 — MANHOLE RISER WITH 4" OPENING

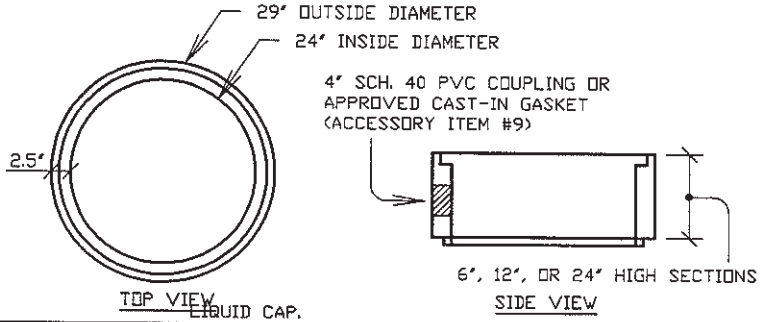

ACCESSORY ITEM #8 — OUTLET OR INLET PLUG

OUTLET PLUGGED FOR HOLDING TANK AND FOR GREASE INTERCEPTOR TANK.

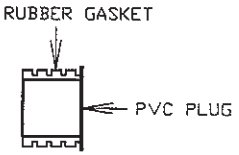

ACCESSORY ITEM #9 — CAST-IN GASKET

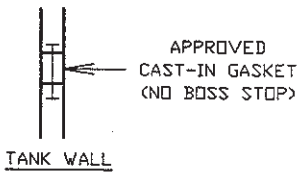

ACCESSORY ITEM #10 — BEST GF 10-8 FILTER (OR EQUAL)

NOTE:
ONE END OF A 4" SCH. 40 PVC PIPE IS GLUED INTO FILTER OPENING & THE OTHER END IS INSERTED THRU THE BOSS STOP WITH A GASKET OR GLUED TO A 4" SCH. 40 PVC COUPLING.

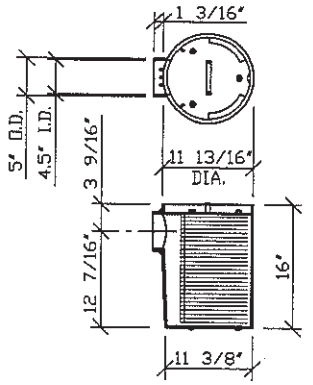

ACCESSORY ITEM #11 — HOLDING TANK TOP (SECTION VIEW)

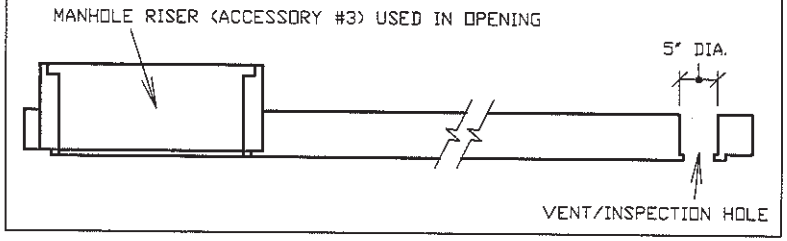

N.P.C.A. CERTIFIED PLANT & MEMBER OF: NATIONAL & WISCONSIN PRECAST CONCRETE ASSOCIATIONS

THIS DRAWING SHALL NOT BE COPIED OR SUBMITTED TO OTHERS WITHOUT THE CONSENT OF THIS COMPANY.

HUFFCUTT CONCRETE, INC
4154 123rd STREET
CHIPPEWA FALLS, WI 54729
(715) 723-7446 * (800) 924-1516
FAX (715) 723-7111 * www.huffcutt.com

TANK ACCESSORIES