W975/1425 BIO – 500 GPD
MICROFAST®0.5
TANK SPECIFICATIONS

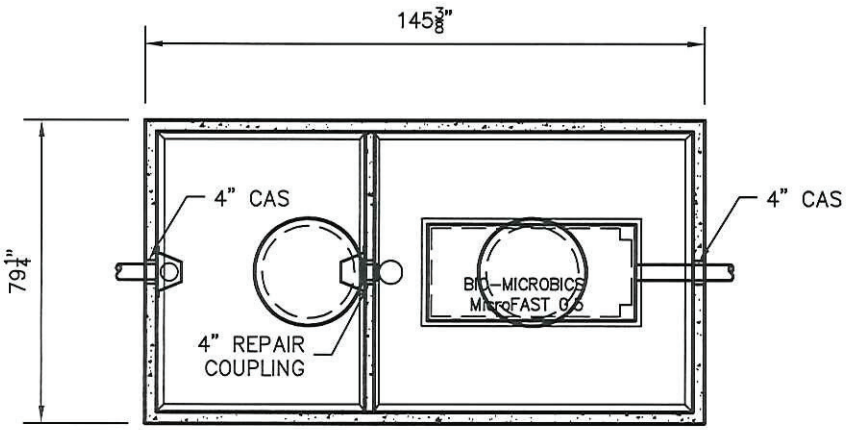

TOP VIEW

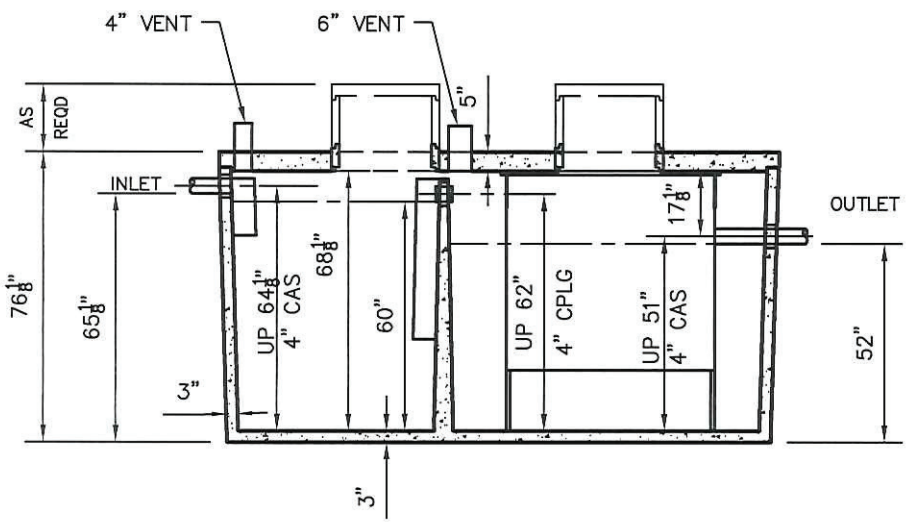

SIDE VIEW

DIMENSIONS:
- WALL: 3"
- BOTTOM: 3"
- COVER: 5"
- MANHOLE: 24" I.D. PRECAST CONCRETE RISER
- HEIGHT: 76 1/4" O.D.
- LENGTH: 145 1/2" O.D.
- WIDTH: 79 1/4" O.D.
- BELOW INLET: 65" O.D.
- LIQUID LEVEL: 60"
- WEIGHT: 20,095 LBS

INLET AND OUTLET:
4" CAST-A-SEAL (CAS) BOOT OR EQUAL

INLET AND OUTLET BAFFLES:
AS SHOWN

LIQUID CAPACITY: 16.12 GAL/IN (SEPTIC)
24.91 GAL/IN (BIO)

LOADING DESIGN: 8'-0" UNSATURATED SOIL

COVER: MIX DESIGN #8 (NO FIBER)
TANK: MIX DESIGN #9 (SMALL FIBER)

CUSTOMIZED TANKS:
FOR CUSTOM TANKS CONTACT WIESER CONCRETE

Conditionally APPROVED
SEE CORRESPONDENCE

DRAWINGS SUBMITTED FOR APPROVAL
APPROVED BY: _____
APPROVAL DATE: _____
PRODUCTS NEEDED BY: _____

20140329

TANKS ARE MANUFACTURED TO MEET OR EXCEED ASTM C-1227 REQUIREMENTS

PRE-POUR:
POST-POUR:
SCALE: 1/4"=1'-0"
REV.
DATE:
DRAWN BY: WCP
DATE: 00/00/00
FILE: W975/1425 BIO MICROFAST 500

WIESER CONCRETE
W3716 US HWY 10 MAIDEN ROCK, WI 54750
800-325-8456

W975/1425 BIO 500 GPD
SEPTIC MANUAL

SHEET NO. 1 OF 1

W975/1425 BIO – 750 GPD
MICROFAST®0.75
TANK SPECIFICATIONS

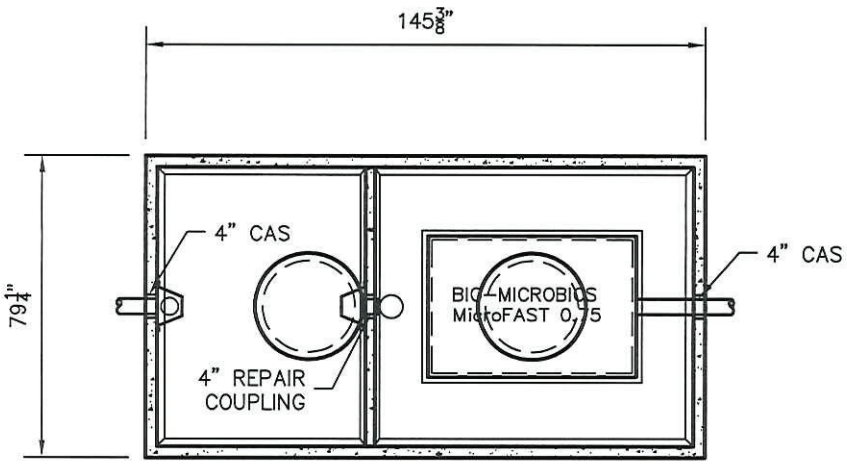

TOP VIEW

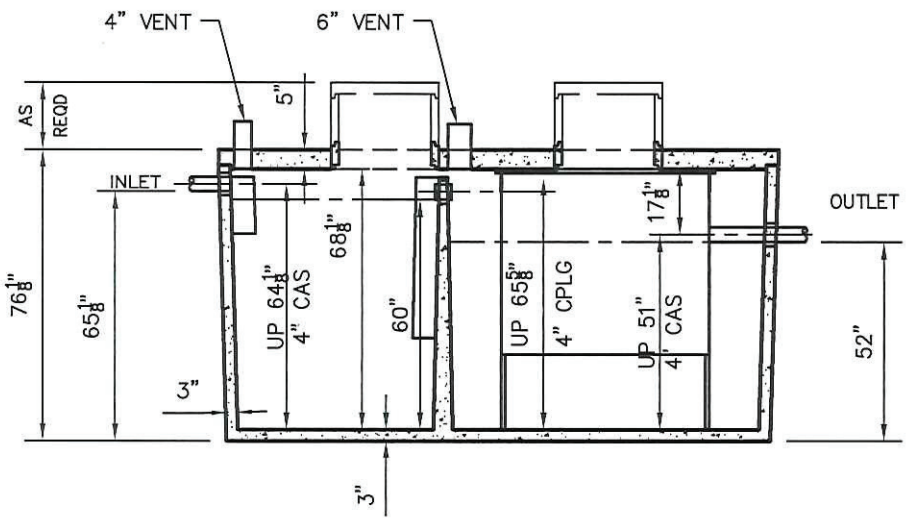

SIDE VIEW

DIMENSIONS:
- WALL: 3"
- BOTTOM: 3"
- COVER: 5"
- MANHOLE: 24" I.D. PRECAST CONCRETE RISER
- HEIGHT: 76" O.D.
- LENGTH: 145 1/2" O.D.
- WIDTH: 79 1/4" O.D.
- BELOW INLET: 65" O.D.
- LIQUID LEVEL: 60"
- WEIGHT: 20,095 LBS

INLET AND OUTLET:
4" CAST-A-SEAL (CAS) BOOT OR EQUAL

INLET AND OUTLET BAFFLES:
AS SHOWN

LIQUID CAPACITY: 16.12 GAL/IN (SEPTIC)
24.91 GAL/IN (BIO)

LOADING DESIGN: 8'-0" UNSATURATED SOIL

COVER: MIX DESIGN #8 (NO FIBER)
TANK: MIX DESIGN #9 (SMALL FIBER)

CUSTOMIZED TANKS:
FOR CUSTOM TANKS CONTACT WIESER CONCRETE

Conditionally APPROVED
SEE CORRESPONDENCE

DRAWINGS SUBMITTED FOR APPROVAL
APPROVED BY: _____
APPROVAL DATE: _____
PRODUCTS NEEDED BY: _____

TANKS ARE MANUFACTURED TO MEET OR EXCEED ASTM C-1227 REQUIREMENTS

20140329

PRE-POUR:
POST-POUR:
SCALE: 1/4"=1'-0"
REV.
DATE:
DRAWN BY: WCP
DATE: 00/00/00
FILE: W975/1425 BIO MICROFAST 750

WIESER CONCRETE
W3716 US HWY 10 MAIDEN ROCK, WI 54750
800-325-8456

W975/1425 BIO 750 GPD
SEPTIC MANUAL

SHEET NO. 1 OF 1

W975/1425 BIO – 900 GPD
MICROFAST®0.9
TANK SPECIFICATIONS

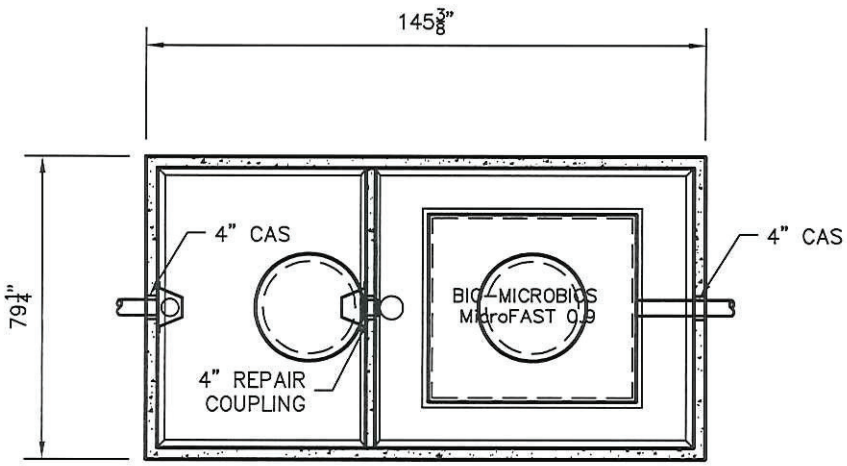

TOP VIEW

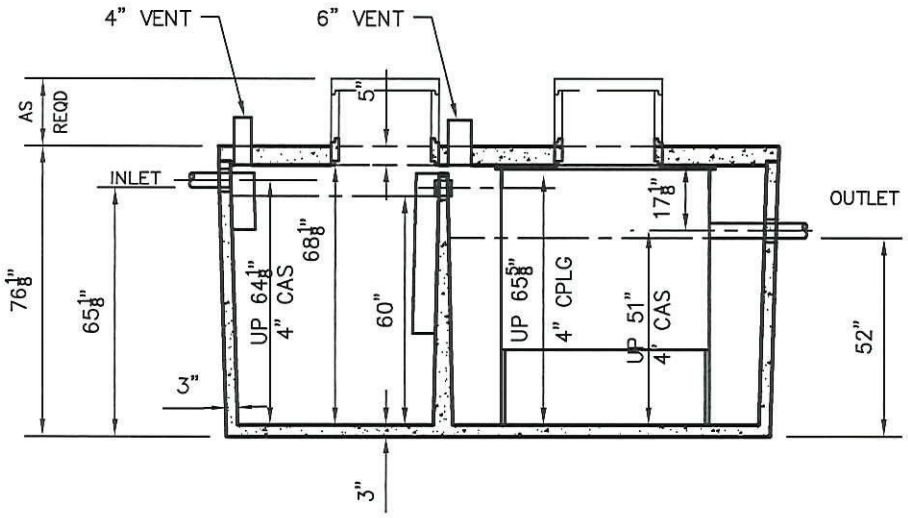

SIDE VIEW

DIMENSIONS:
- WALL: 3"
- BOTTOM: 3"
- COVER: 5"
- MANHOLE: 24" I.D. PRECAST CONCRETE RISER
- HEIGHT: 76" O.D.
- LENGTH: 145 1/2" O.D.
- WIDTH: 79 1/4" O.D.
- BELOW INLET: 65" O.D.
- LIQUID LEVEL: 60"
- WEIGHT: 20,095 LBS

INLET AND OUTLET:
4" CAST-A-SEAL (CAS) BOOT OR EQUAL

INLET AND OUTLET BAFFLES:
AS SHOWN

LIQUID CAPACITY: 16.12 GAL/IN (SEPTIC)
24.91 GAL/IN (BIO)

LOADING DESIGN: 8'-0" UNSATURATED SOIL

COVER: MIX DESIGN #8 (NO FIBER)
TANK: MIX DESIGN #9 (SMALL FIBER)

CUSTOMIZED TANKS:
FOR CUSTOM TANKS CONTACT WIESER CONCRETE

Conditionally APPROVED
SEE CORRESPONDENCE

DRAWINGS SUBMITTED FOR APPROVAL
APPROVED BY: _____
APPROVAL DATE: _____
PRODUCTS NEEDED BY: _____

20140329

TANKS ARE MANUFACTURED TO MEET OR EXCEED ASTM C-1227 REQUIREMENTS

PRE-POUR:
POST-POUR:
SCALE: 1/4"=1'-0"
REV.
DATE:
DRAWN BY: WCP
DATE: 00/00/00
FILE: W975/1425 BIO MICROFAST 900

WIESER CONCRETE
W3716 US HWY 10 MAIDEN ROCK, WI 54750
800-325-8456

W975/1425 BIO 900 GPD
SEPTIC MANUAL

SHEET NO. 1 OF 1

W975/1425 BIO – 1000 GPD
High Strength FAST®1.0
TANK SPECIFICATIONS

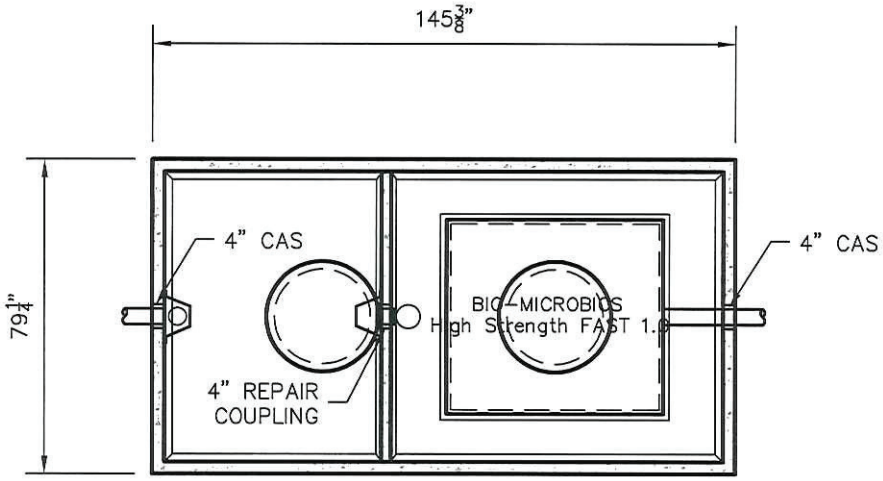

TOP VIEW

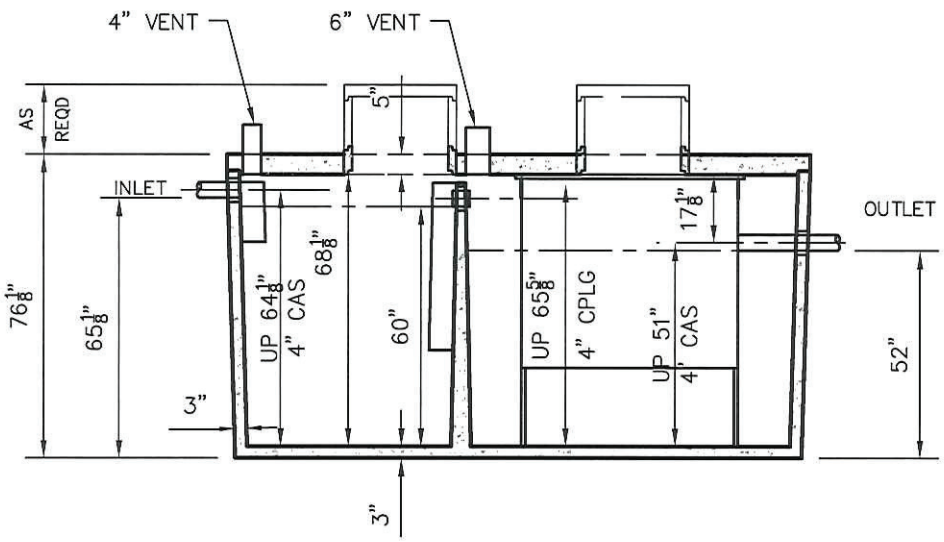

SIDE VIEW

DIMENSIONS:
- WALL: 3"
- BOTTOM: 3"
- COVER: 5"
- MANHOLE: 24" I.D. PRECAST CONCRETE RISER
- HEIGHT: 76" O.D.
- LENGTH: 145 1/2" O.D.
- WIDTH: 79 1/4" O.D.
- BELOW INLET: 65" O.D.
- LIQUID LEVEL: 60"
- WEIGHT: 20,095 LBS

INLET AND OUTLET:
4" CAST-A-SEAL (CAS) BOOT OR EQUAL

INLET AND OUTLET BAFFLES:
AS SHOWN

LIQUID CAPACITY: 16.12 GAL/IN (SEPTIC)
24.91 GAL/IN (BIO)

LOADING DESIGN: 8'-0" UNSATURATED SOIL

COVER: MIX DESIGN #8 (NO FIBER)
TANK: MIX DESIGN #9 (SMALL FIBER)

CUSTOMIZED TANKS:
FOR CUSTOM TANKS CONTACT WIESER CONCRETE

Conditionally APPROVED
SEE CORRESPONDENCE

DRAWINGS SUBMITTED FOR APPROVAL
APPROVED BY: _____
APPROVAL DATE: _____
PRODUCTS NEEDED BY: _____

20140329

TANKS ARE MANUFACTURED TO MEET OR EXCEED ASTM C-1227 REQUIREMENTS

PRE-POUR: | POST-POUR:
SCALE: 1/4"=1'-0" | REV. | DATE: .
DRAWN BY: WCP | DATE: 00/00/00 | FILE: W975/1425 BIO MICROFAST 900

WIESER CONCRETE
W3716 US HWY 10 MAIDEN ROCK, WI 54750
800-325-8456

W975/1425 BIO 1000 GPD
SEPTIC MANUAL

SHEET NO. 1 OF 1