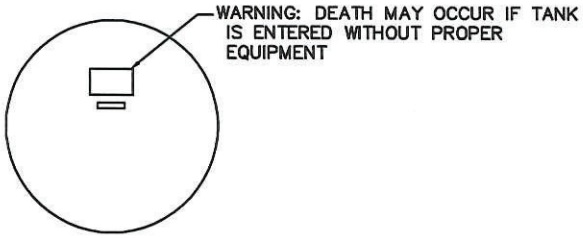

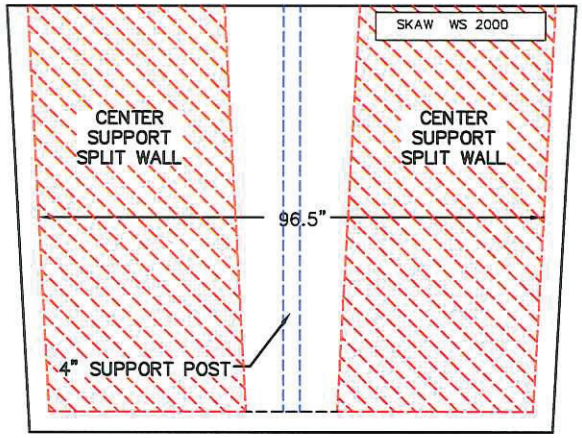

OUTLET END VIEW OF TANK

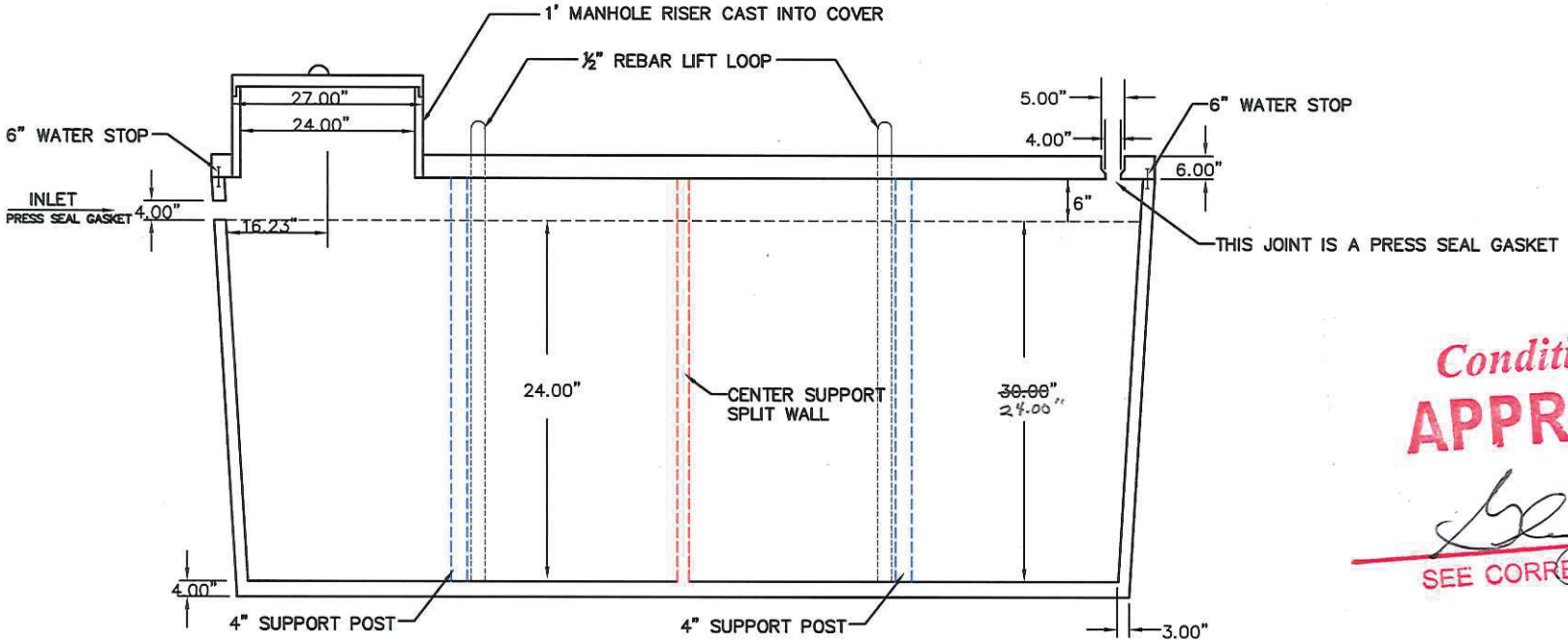

SECTION VIEW OF TANK

Conditionally APPROVED

SEE CORRESPONDENCE

20150015

PRODUCT NAME: PUMP OR HOLDING

MODEL NUMBER(S): WS 2000

PRODUCT FILE NO.:

SKAW PRE-CAST

26255 105th STREET, NEW AUBURN
WISCONSIN 54757

PHONE: (715) 967-2277
TOLL FREE: 1-800-924-8625
HOME PHONE: (715) 967-2305
FAX: (715) 967-2707 (SHOP)
FAX: (715) 967-2708 (HOME)

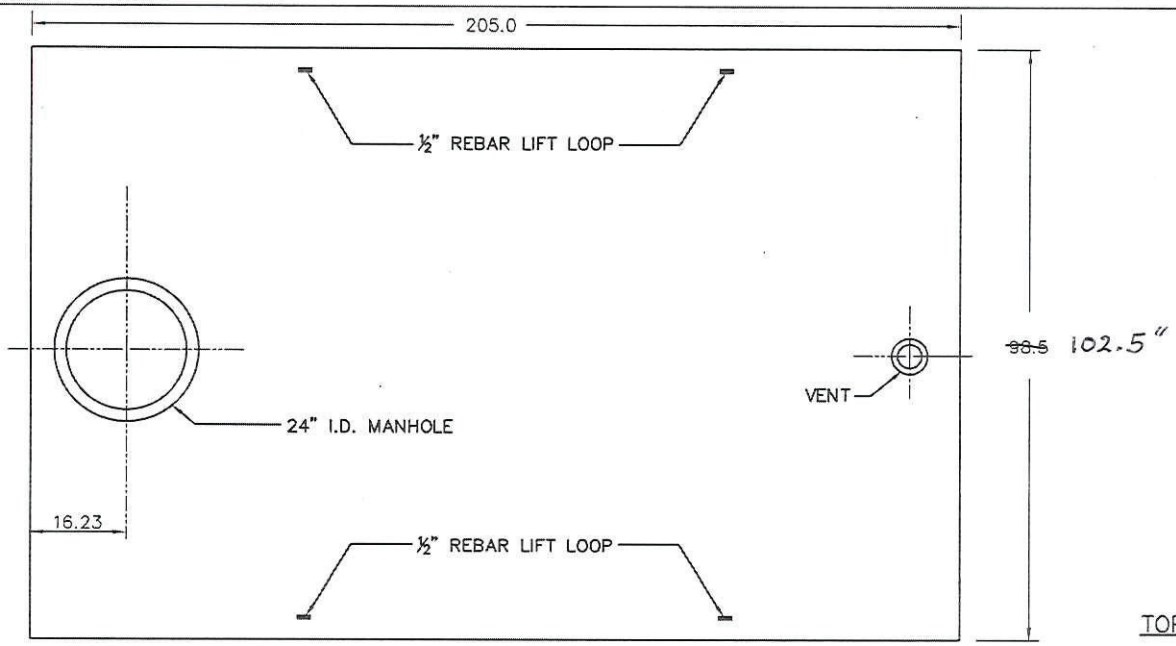

TOP VIEW OF COVER

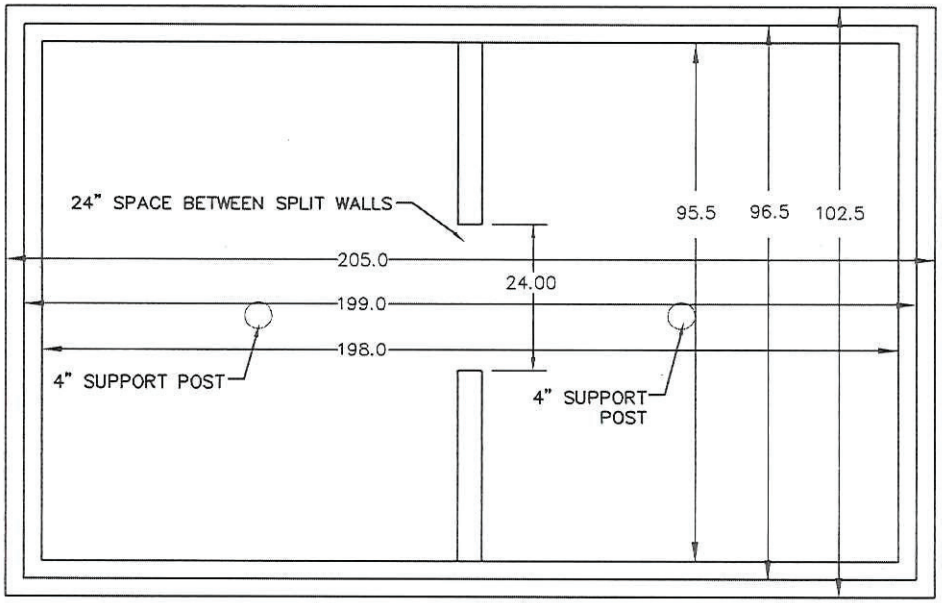

TOP VIEW OF TANK

Conditionally APPROVED

SEE CORRESPONDENCE

20150015

PRODUCT NAME: PUMP OR HOLDING

MODEL NUMBER(S): WS 2000

PRODUCT FILE NO.:

SKAW PRE-CAST

26255 105th STREET, NEW AUBURN
WISCONSIN 54757

PHONE: (715) 967-2277
TOLL FREE: 1-800-924-8625
HOME PHONE: (715) 967-2305
FAX: (715) 967-2707 (SHOP)
FAX: (715) 967-2708 (HOME)

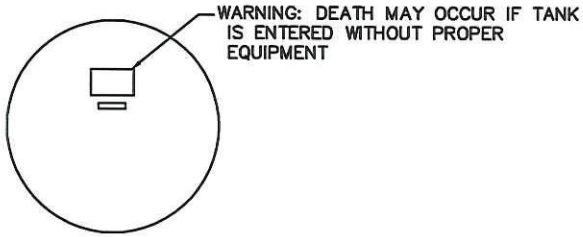

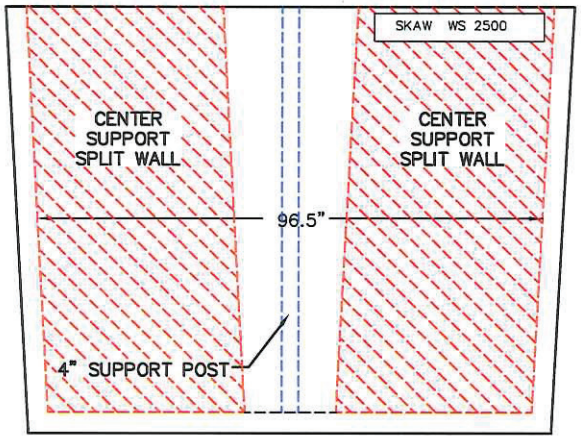

OUTLET END VIEW OF TANK

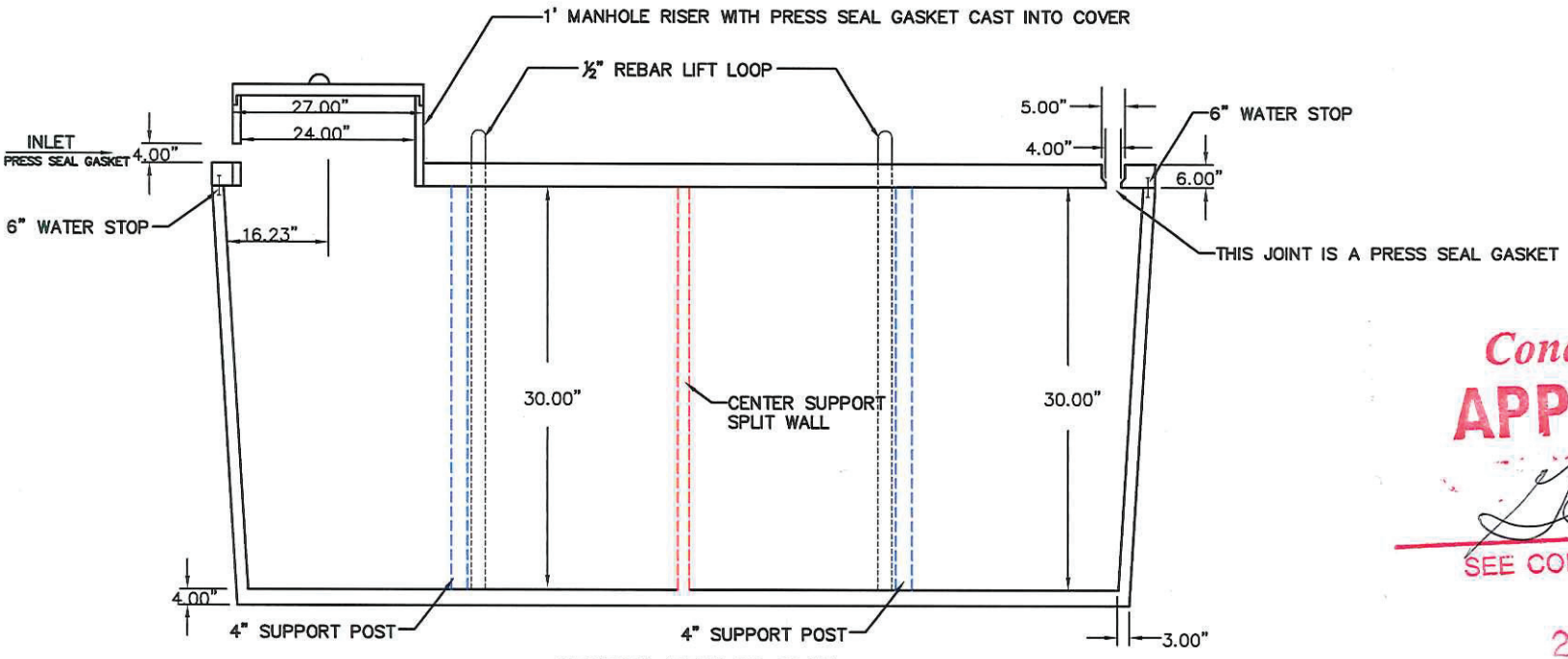

SECTION VIEW OF TANK

Conditionally APPROVED

SEE CORRESPONDENCE

20150015

PRODUCT NAME: PUMP OR HOLDING

MODEL NUMBER(S): WS 2500

PRODUCT FILE NO.:

SKAW PRE-CAST

26255 105th STREET, NEW AUBURN
WISCONSIN 54757

PHONE: (715) 967-2277
TOLL FREE: 1-800-924-8625
HOME PHONE: (715) 967-2305
FAX: (715) 967-2707 (SHOP)
FAX: (715) 967-2708 (HOME)

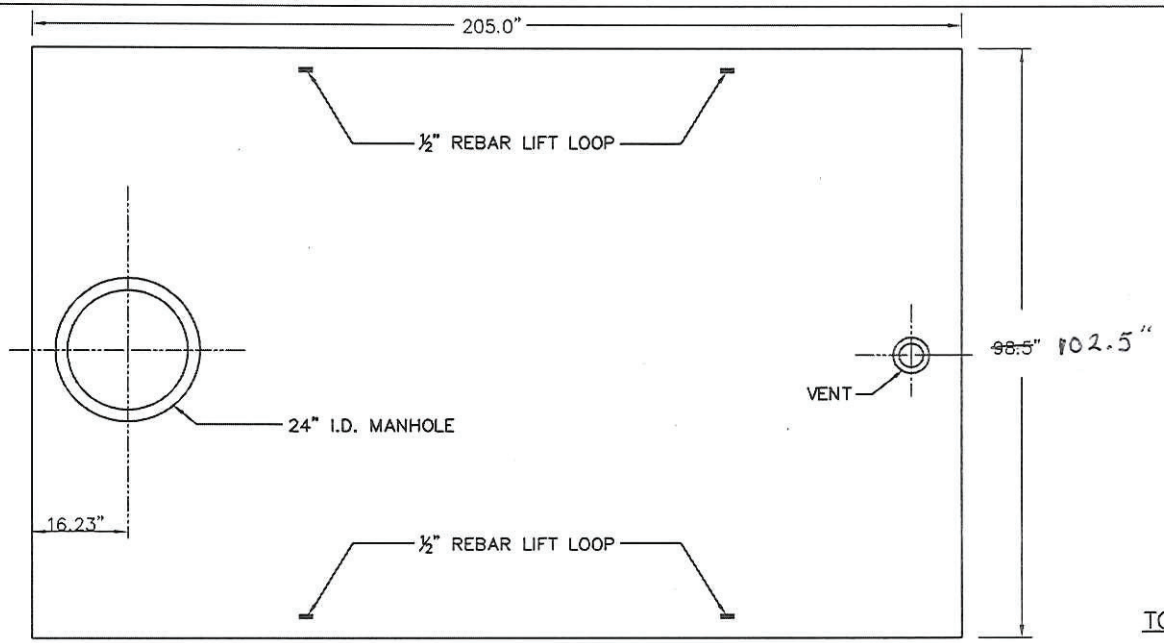

TOP VIEW OF COVER

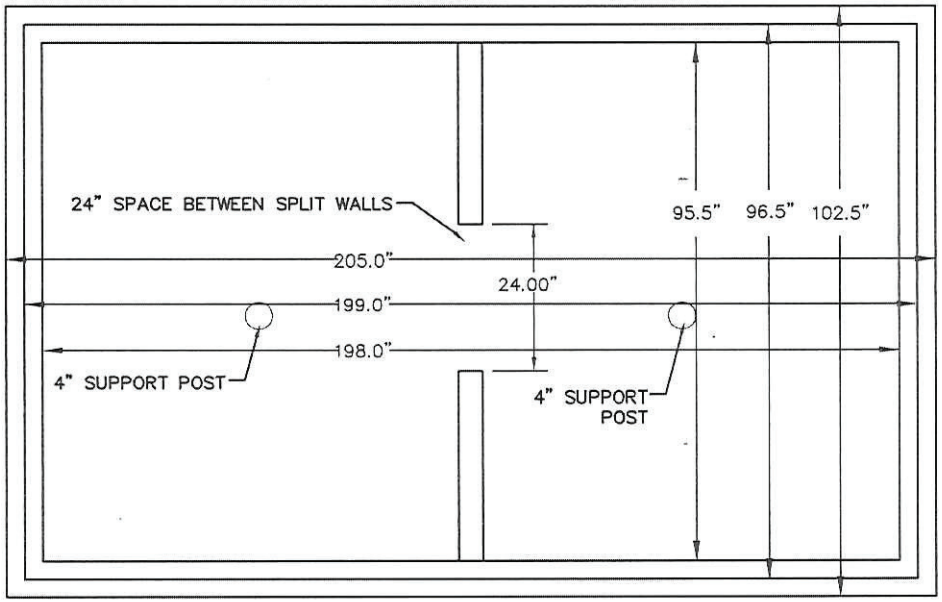

TOP VIEW OF TANK

Conditionally APPROVED

SEE CORRESPONDENCE

20150015

PRODUCT NAME: PUMP OR HOLDING

MODEL NUMBER(S): WS 2500

PRODUCT FILE NO.:

SKAW PRE-CAST

26255 105th STREET, NEW AUBURN
WISCONSIN 54757

PHONE: (715) 967-2277
TOLL FREE: 1-800-924-8625
HOME PHONE: (715) 967-2305
FAX: (715) 967-2707 (SHOP)
FAX: (715) 967-2708 (HOME)

24" x 1 Foot riser section poured into cover

1 sq = 2"

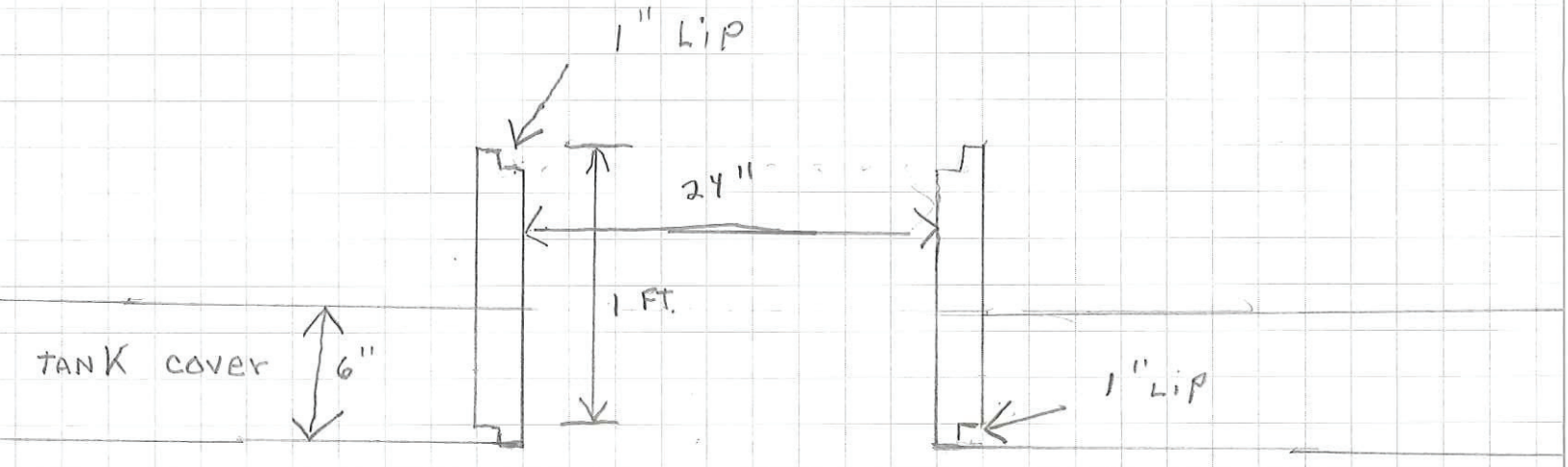

Product File # 20150015

20150015

Conditionally
APPROVED
SEE CORRESPONDENCE

LAFARGE
www.lafargenorthamerica.com

VOLUME CLALCULATIONS

KNOWN:

1728 cubic inches in a cubic foot

7.5 gallons / cubic foot

ALL MEASUREMENTS ARE INSIDE DIMENSIONS

WS 2000

WIDTH = 96.5"
LENGTH = 199"
LIQUID DEPTH = 24"
GALLONS / INCH = 83.34

96.5 " X 199" X 24" = 460,884.0 cubic inches divided by 1728 = 266.71 cubic feet X 7.5 = 2000.36 gallons

WS 2500

WIDTH = 96.5"
LENGTH = 199"
LIQUID DEPTH = 30"
GALLONS / INCH = 83.34

83.34 GALLONS X 30" = 2500.20 gallons