20150064 A

STANDARD TANK DESIGN:
- 7FT OF COVER AT 120 PCF PLUS HS20-44 AXLE LOAD
- MAXIMUM LOAD ON TANK TOP CANNOT EXCEED 6.5 PSI
- MAXIMUM TEST PRESSURE - 5PSI

NOTES:
- WATER TANK TEST PER CSI PUB INST603B.
- ONSITE WATER TIGHTNESS CERTIFICATION BY OTHERS.

NOTE: CUSTOMER SUPPLIED FLEXIBLE PIPING COUPLING REQUIRED ON TANGENTIALLY MTD. NOZZLES, STUB-OUTS & NPT FITTINGS.

23-1/2" O.D. FRP ACCESS OPENING W/23" TANK TOP CUT-OUT (3 TYP.) SIZED FOR 24" DIA. PVC RISERS WITH LIDS TO GRADE.

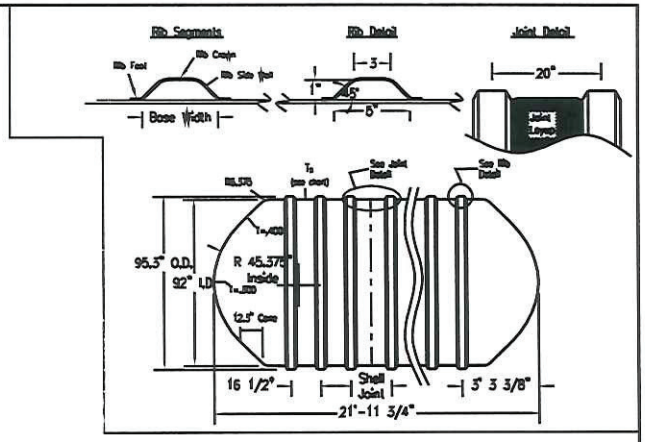

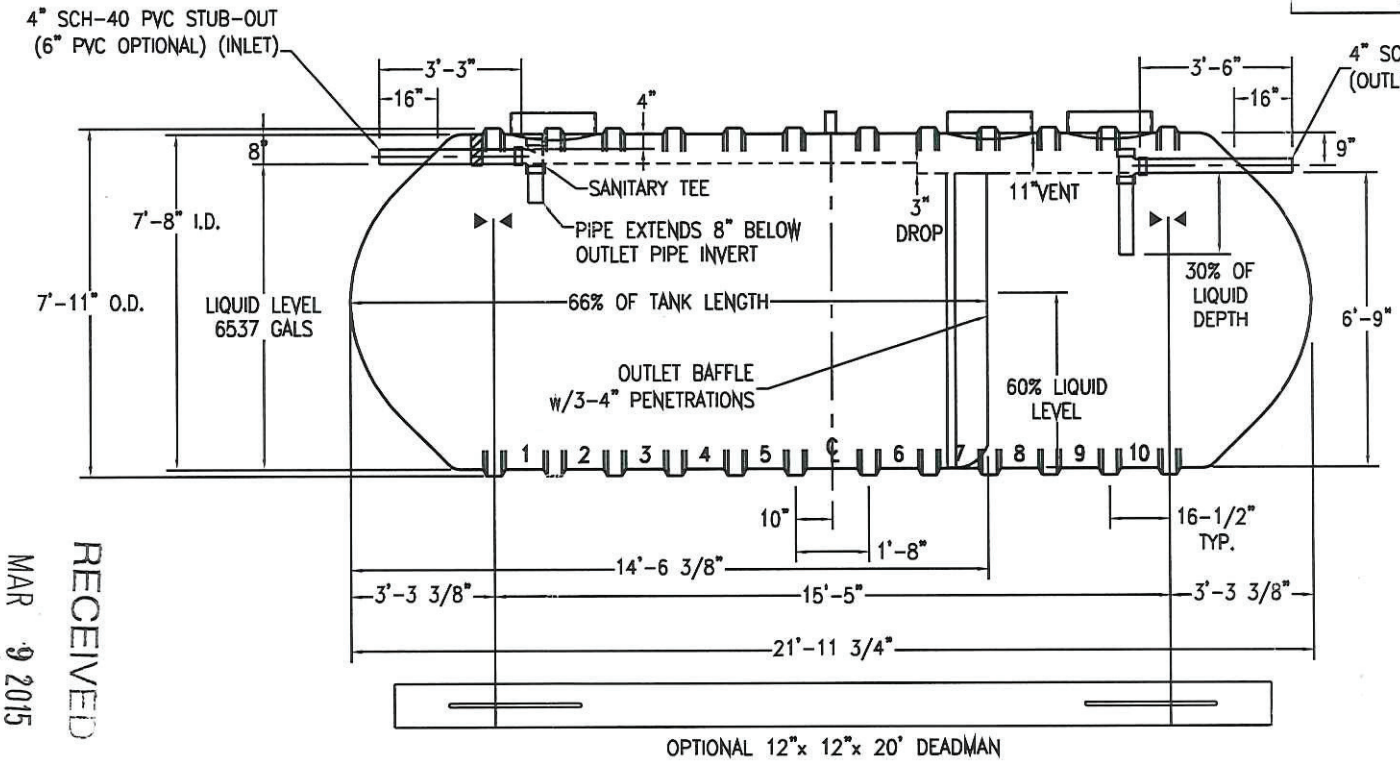

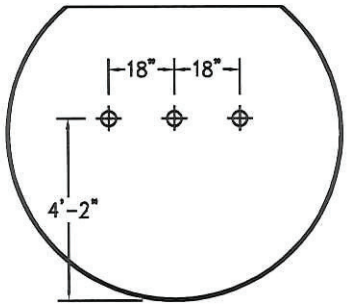

BAFFLE DETAIL

RECEIVED
MAR 9 2015
SAFETY & BUILDING

Conditionally APPROVED

SEE CORRESPONDENCE

NOTES:
- ⊠ HOLD DOWN STRAP CLIP
- ▶◀ HOLD DOWN STRAP LOCATION
- ▯ TYPE "13" LIFT LUG - SD
- ▮ TYPE "13" LIFT LUG - HD

INLET CHAMBER CAPACITY = 4436 GALS
PUMP CHAMBER CAPACITY = 2101 GALS

SWT G-6 (8')-7000		DATE: 8/1/03
WISCONSIN DEPT OF COMMERCE		DRAWN BY: K.A.SOEDER
CONTAINMENT SOLUTIONS	CAPACITY: 6,783	REVISED: 5/10/10-KAS
	WEIGHT: DRY/WET 2250	DWG NUMBER: 8FT7MWISC