# Dalmaray Concrete Products Inc.
# Tank Model 1250/750

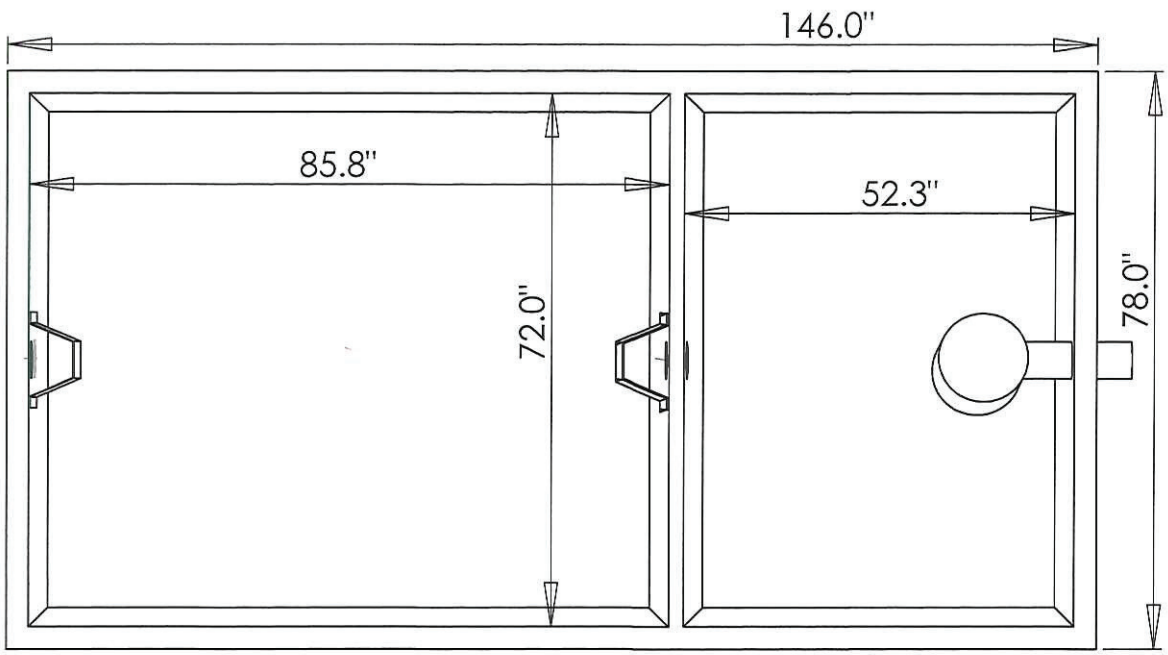


*Model 1250/750 Spetic/Septic, Septic/Pump, Septic/Siphon, Holding, or Grease Interceptor*

*968 GPD as Septic/Septic*
*605 GPD as Septic/Pump or Siphon*

Conditionally APPROVED
SEE CORRESPONDENCE

***DIMENSIONS:***
*LENGTH - 146"*
*WIDTH - 78"*
*HEIGHT - 68"*
*BELOW INLET - 55"*
*TANK WEIGHT - 11000 lb.*
*LID WEIGHT - 6000 lb.*
*MAX DEPTH OF BURY 108"*

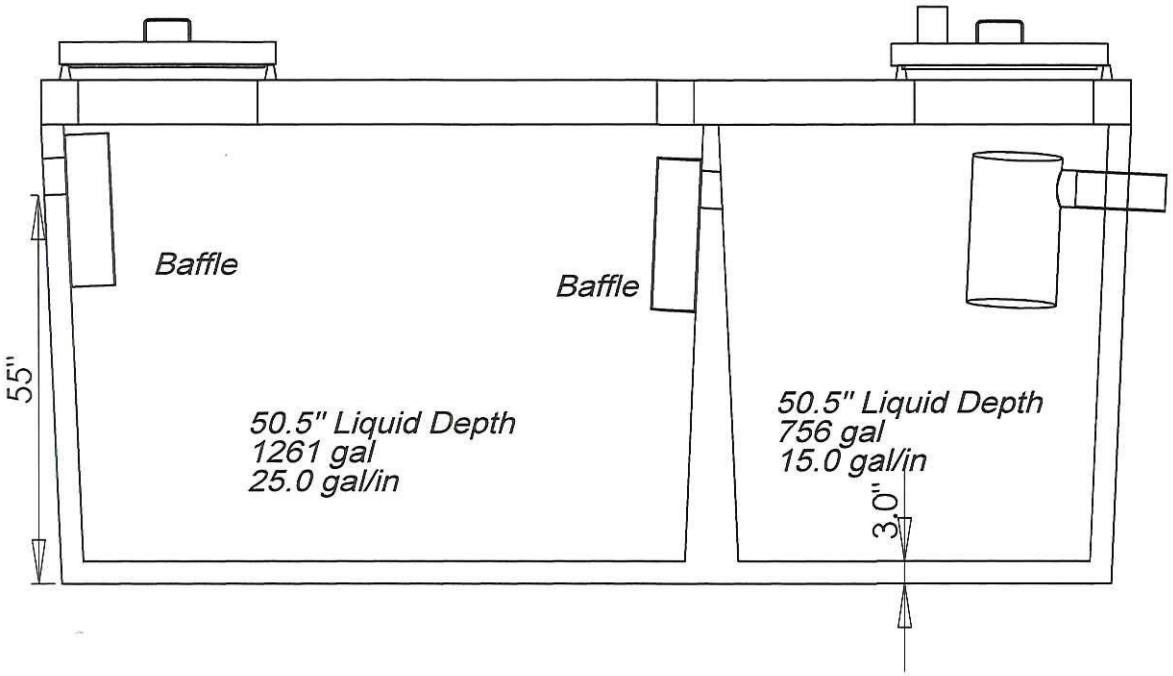



## Dalmaray Concrete Products Inc.

*405 S. Arch St.*
*Janesville, WI 53548*
*(608)-752-6507*
*Toll Free:(888)-222-4541*
*Fax: (608)-752-5671*
*www.dalmarayconcreteproducts.com*
*sales@dalmarayconcreteproducts.com*