20150154

Dalmaray Concrete Products Inc.
Tank Model 1000/750

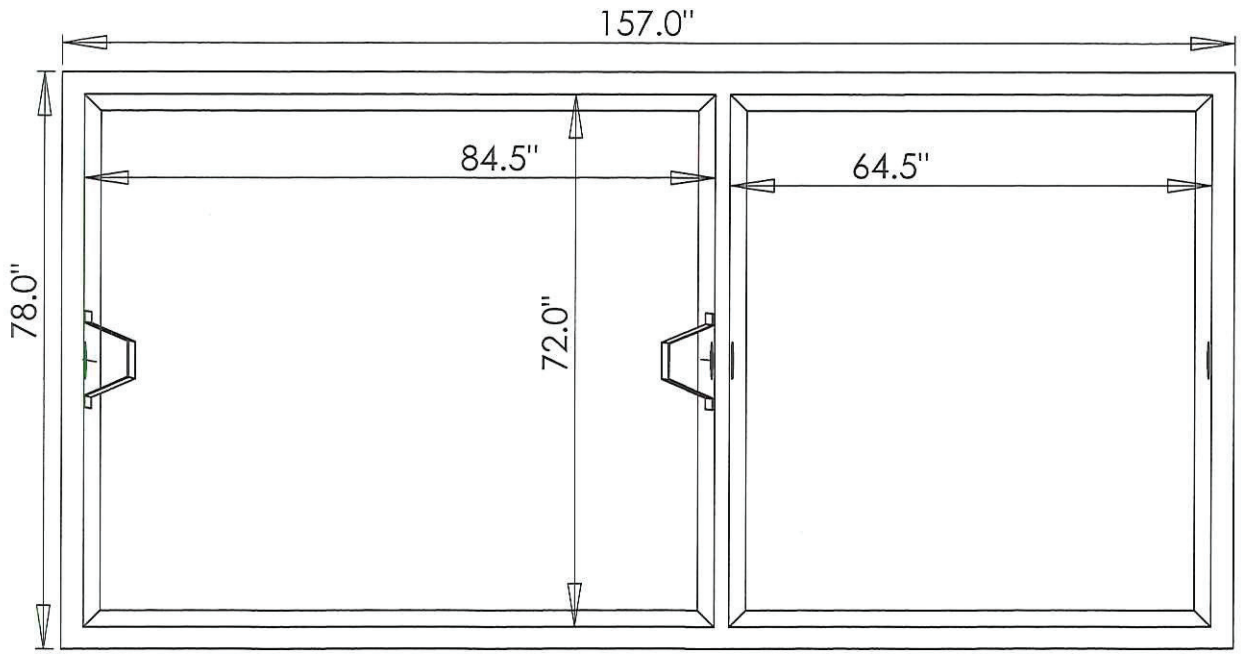

Model 1000/750 Septic/Septic, Septic/Pump, Septic/Siphon, Holding, or Grease Interceptor

859 GPD as Septic/Septic
493 GPD as Septic/Pump or Siphon

DIMENSIONS:
LENGTH - 157"
WIDTH - 78"
HEIGHT - 60"
BELOW INLET - 47"
TANK WEIGHT - 11200 lb.
LID WEIGHT - 6500 lb.
MAX DEPTH OF BURY 108"

Conditionally APPROVED
SEE CORRESPONDENCE

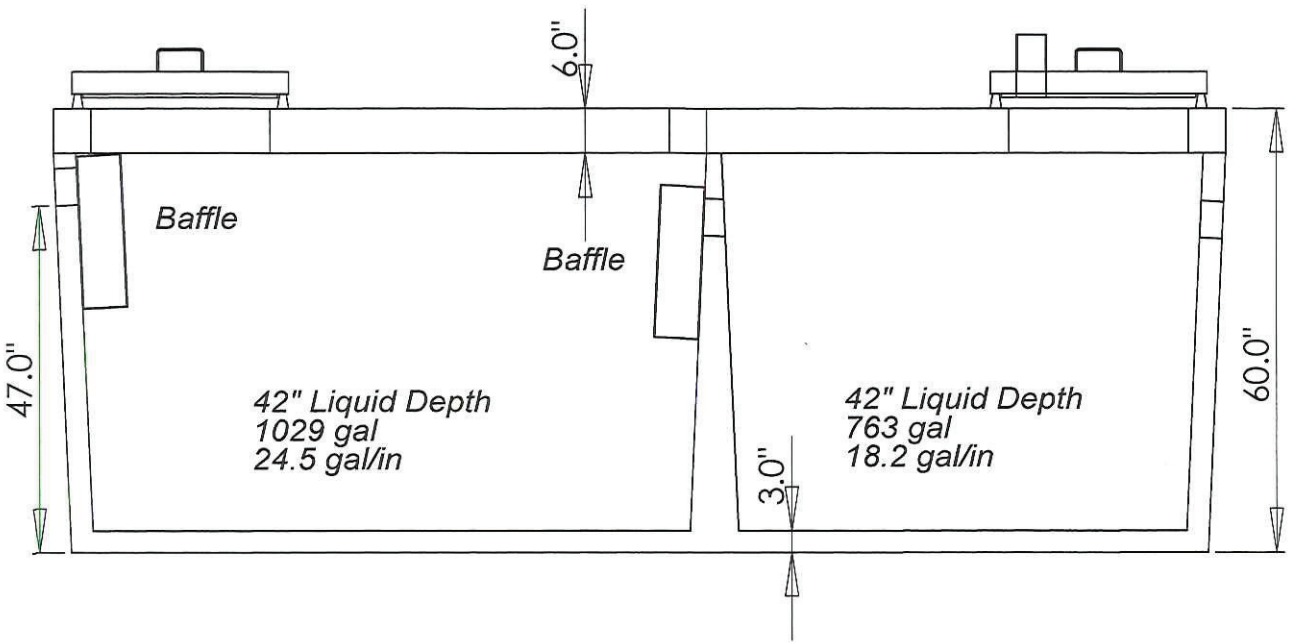

Dalmaray Concrete Products Inc.

405 S. Arch St.
Janesville, WI 53548
(608)-752-6507
Toll Free:(888)-222-4541
Fax: (608)-752-5671