20150157

Dalmaray Concrete Products Inc.
Tank Model 2600

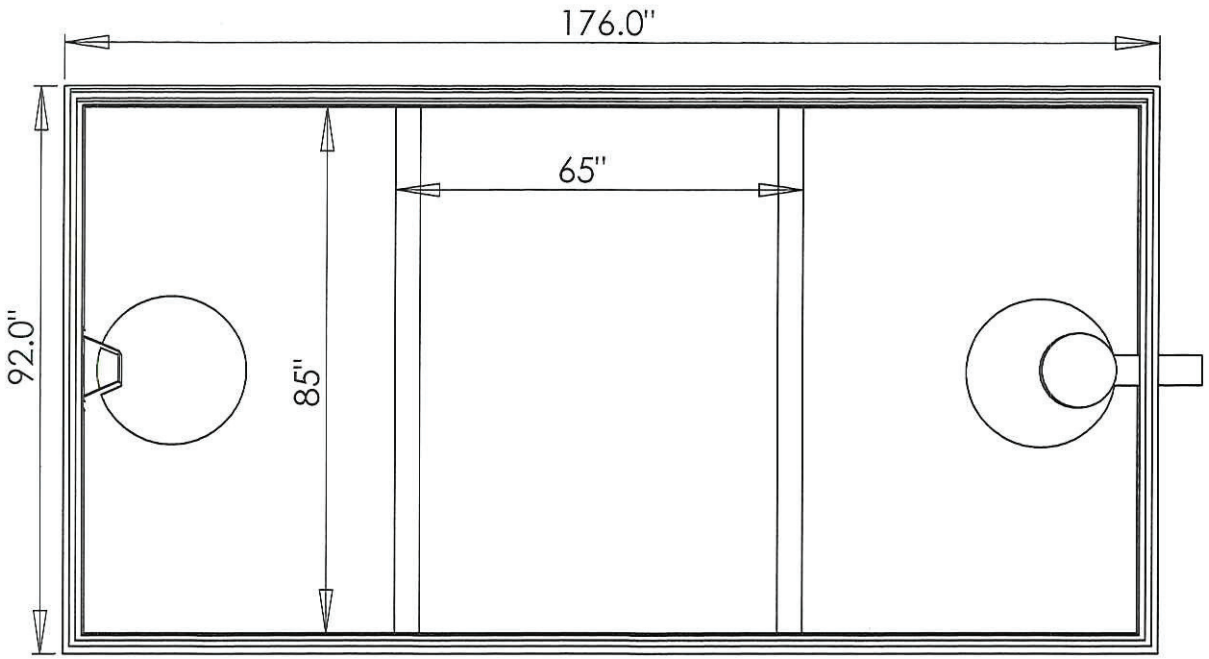

Model 2600 Septic, Holding,
Pump, or Siphon, or Grease Interceptor
2614 gal. septic
2738 gal. holding

1251 GPD WHEN USED AS A SEPTIC TANK
BASED ON A 3 YR SERVICE INTERVAL

DIMENSIONS:
LENGTH - 176"
WIDTH - 92"
HEIGHT - 61"
BELOW INLET - 50"
BOTTOM SECTION WEIGHT - 12500 lb.
TOP SECTION WEIGHT - 11200 lb.
MAX DEPTH OF BURY 108"

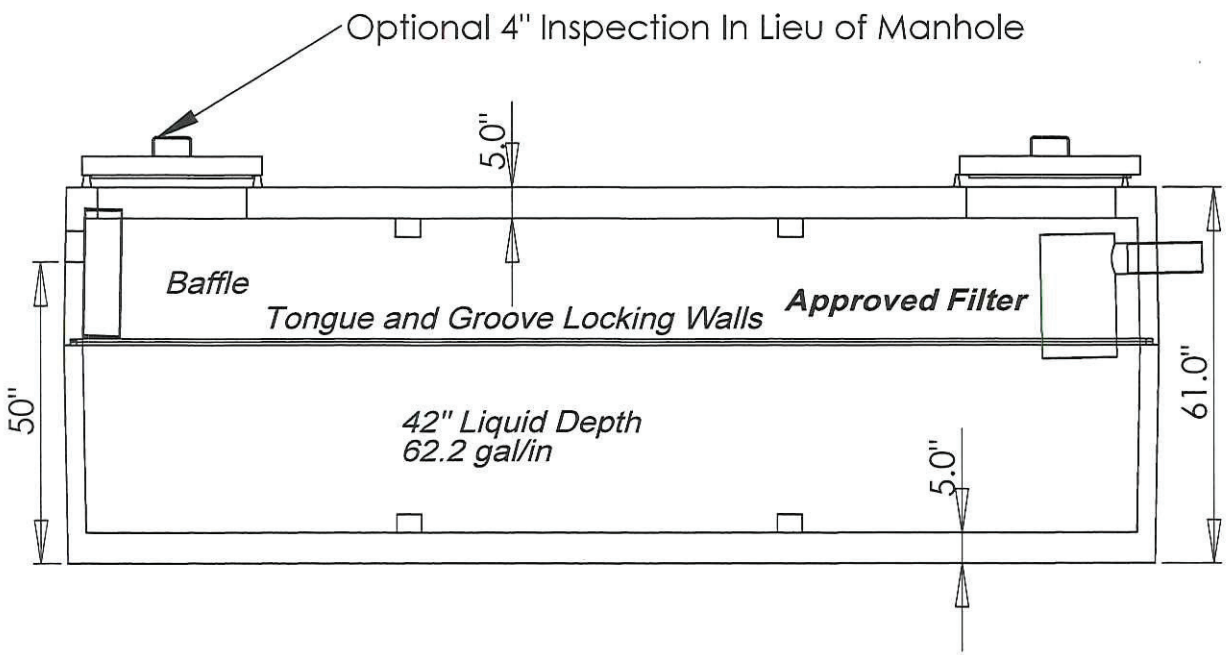

Dalmaray
PRECAST CONCRETE PRODUCTS
"Demand Quality.. Demand Dalmaray"

Conditionally APPROVED
SEE CORRESPONDENCE

405 S. Arch St.
Janesville, WI 53548
(608)-752-6507
Toll Free:(888)-222-4541
Fax: (608)-752-5671
www.dalmarayconcreteproducts.com
sales@dalmarayconcreteproducts.com