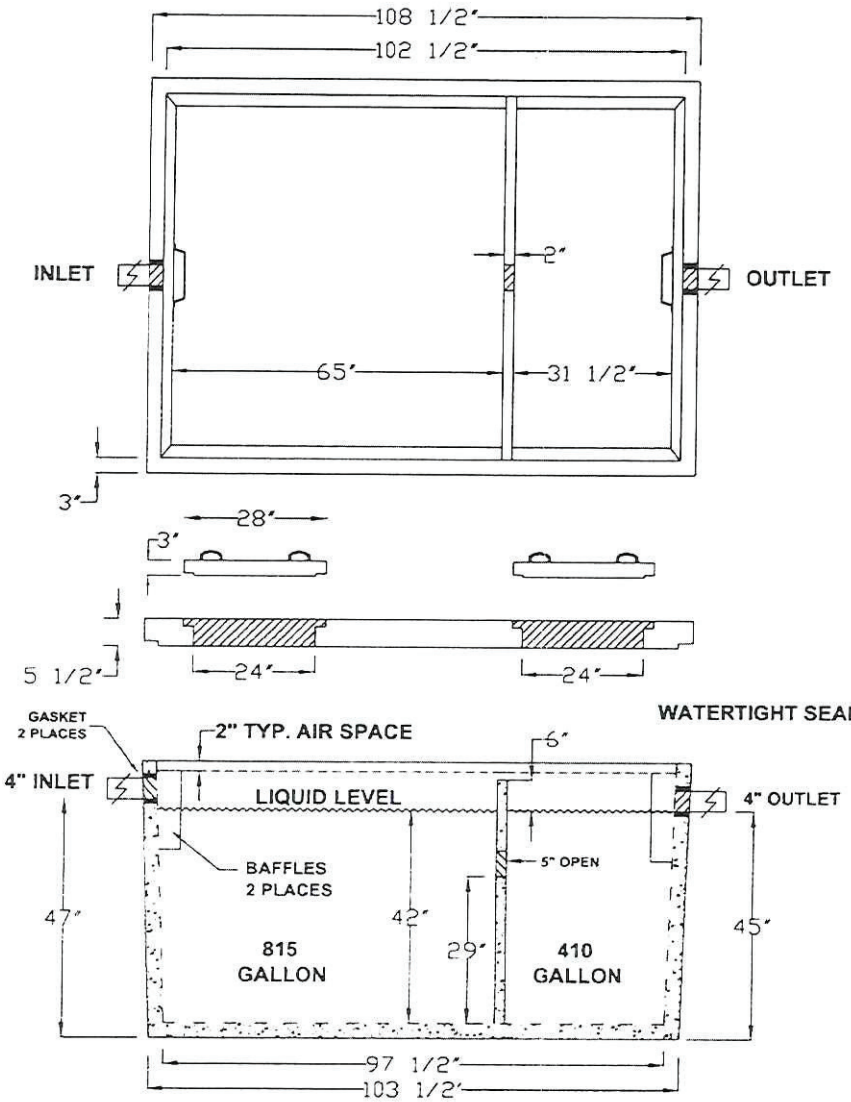

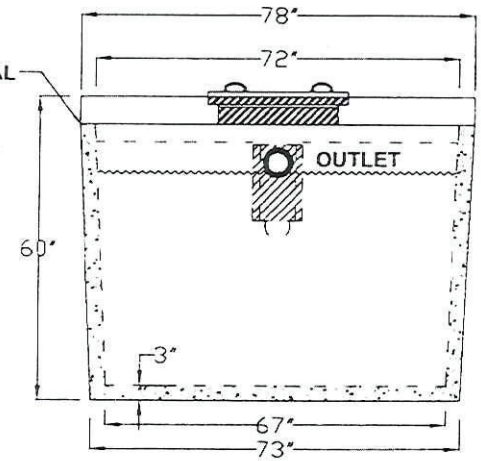

Conditionally APPROVED
SEE CORRESPONDENCE

20150167

GROVE CONCRETE & SUPPLY, INC.
18426 DURAND AVENUE P.O. BOX 363
UNION GROVE, WISCONSIN 53182
(262) 878-2030 FAX (262) 878-4222
GroveConcrete.com

NOTES:

1. GALLONS PER INCH:
   815 COMPARTMENT - 19.40 gal/in
   410 GALLON COMPARTMENT - 9.76 gal/in.
2. REINFORCED CONCRETE 4,000 PSI MIN.
3. (GASKETED 4" OPENLNGS) PRESS SEAL, TUFF TIGHT OR EQUAL
4. ALL BAFFLES & FILTERS TO BE INSTALLED TO MEET STATE & LOCAL CODES.

815 / 410 GALLON (1225)
SEPTIC, HOLDING TANK

FOR ANY MODIFICATIONS CALL
GROVE CONCRETE

DRAWN BY: RAY		DATE: 12/20/13
SCALE: NTS	EST. WIEGHT: 13,000 LBS.	VERSION: 00001
DWG. # TNK-815-410		ILL. APPROVAL # 114
		STATE OF WIS. APPROVED

THIS DRAWING AND THE INFORMATION CONTAINED HERON IS THE EXCLUSIVE PROPERTY OF GROVE CONCRETE & SUPPLY, INC. AND SHALL NOT BE REPRODUCED, USED, OR DISCLOSED TO OTHERS EXCEPT AS AUTHORIZED THROUGH WRITTEN CONCENT FROM GROVE CONCRETE & SUPPLY, INC