20150223

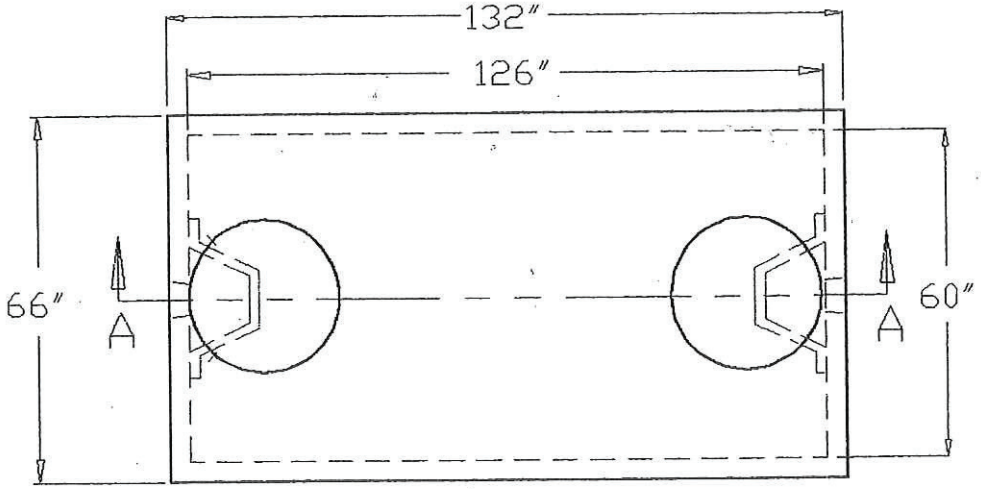

TOP VIEW

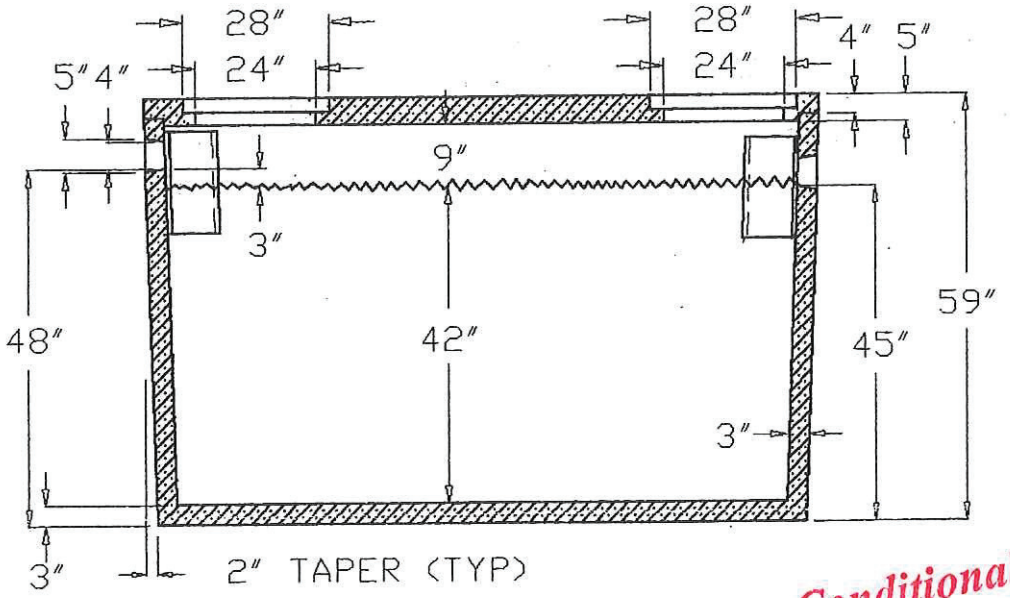

SECTION A-A

PROPERTY OF DEL ZOTTO MFG.

MFG. FOR MILLER PRODUCT & SUPPLY

Conditionally APPROVED

Alan Jones

SEE CORRESPONDENCE

This drawing and the information contained hereon is the exclusive property of Del Zotto Mfg., Inc., and shall not be reproduced, used, or disclosed to others except as authorized through written consent from Del Zotto Mfg., Inc.

DEL ZOTTO MFG.	
1250 GAL. TANK DESIGNED FOR BOB FAYAS	
DRAWING #:	MIL-1250
BY: CHRIS S.	DATE: 5/16/95