20150310
~~20100306~~

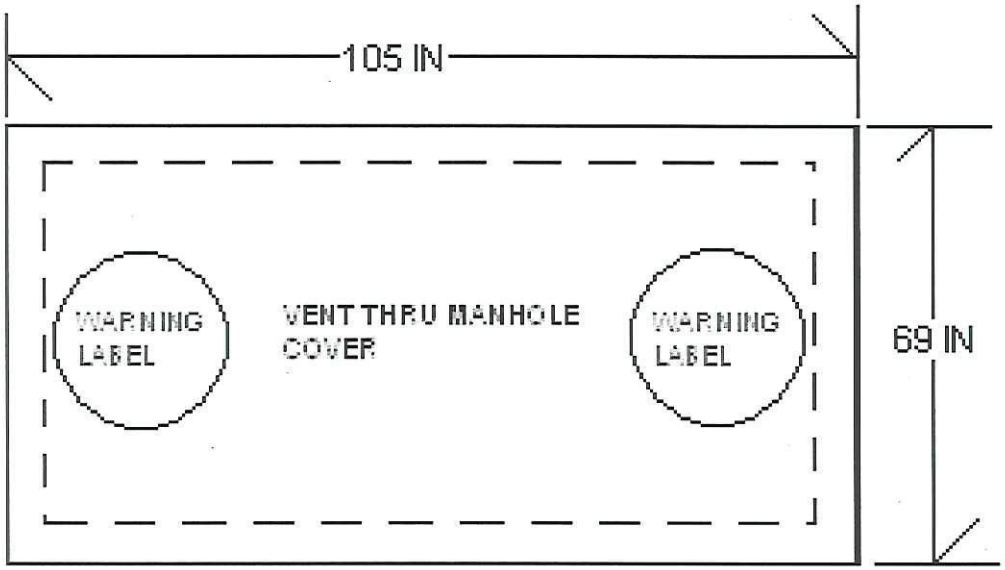

ANTIGO BLOCK CO. INC.
230 MILTON ST
P.O. BOX 34
ANTIGO, WI 54409
(715) 623-4837
(715) 623-5777

Conditionally
APPROVED
DEPARTMENT OF COMMERCE
DIVISION OF SAFETY AND BUILDINGS
Jam. Mac Cobb
SEE CORRESPONDENCE

CAPACITY 1255 GAL
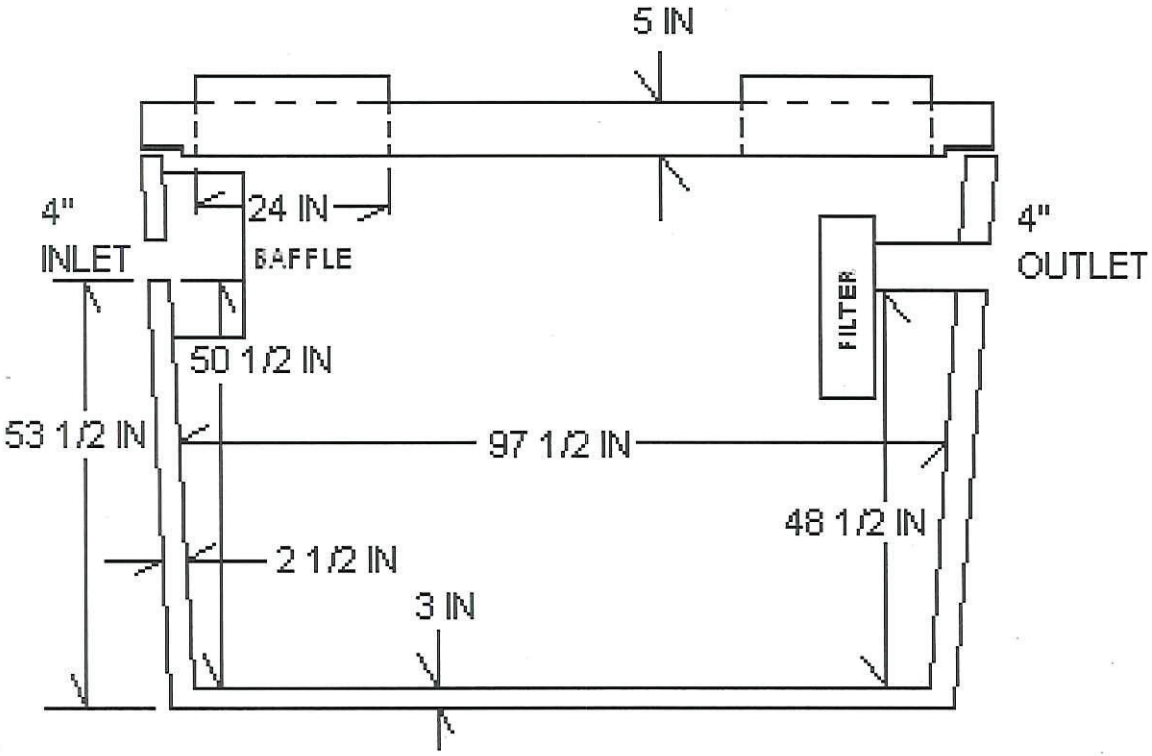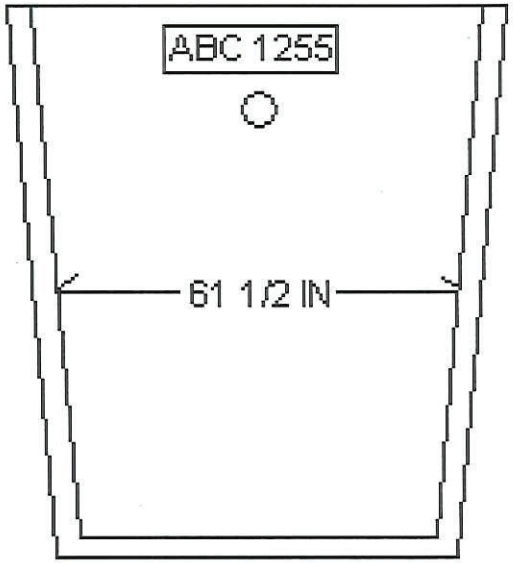
WEIGHT 8750 LBS