20150311
~~20100400~~

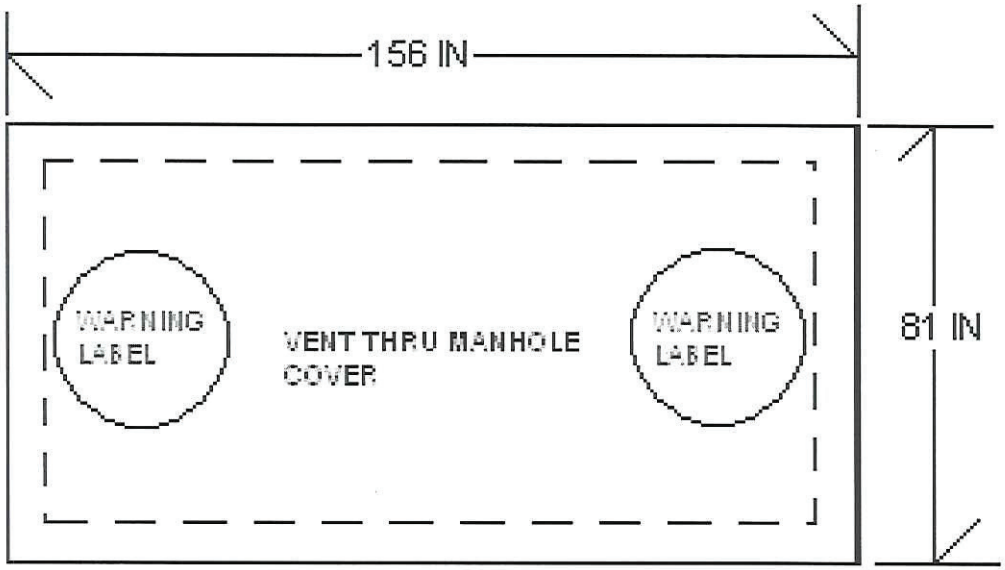

ANTIGO BLOCK CO. INC.
230 MILTON ST
P.O. BOX 34
ANTIGO, WI 54409
(715) 623-4837
(715) 623-5777

Conditionally
APPROVED
DEPARTMENT OF COMMERCE
DIVISION OF SAFETY AND BUILDINGS
SEE CORRESPONDENCE

CAPACITY 2000 LP GAL
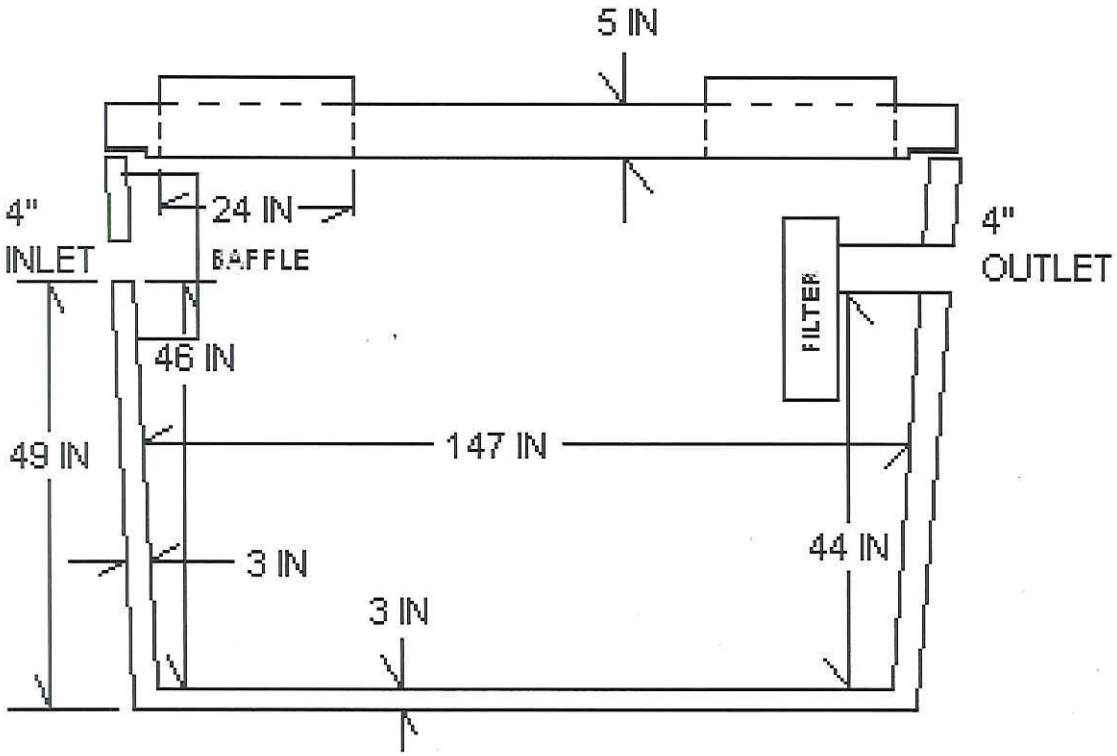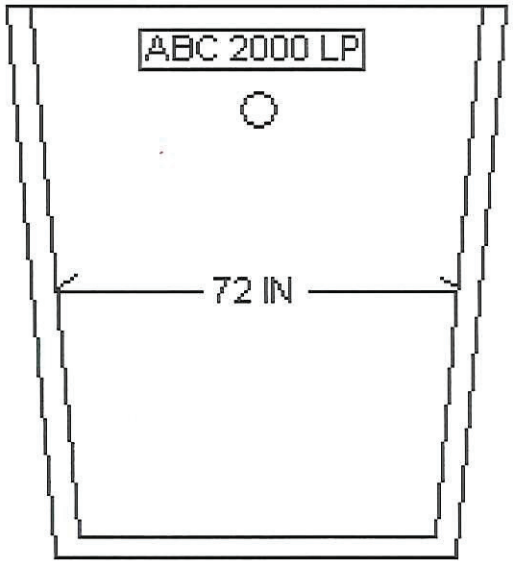
WEIGHT 15360 LBS