20150313
~~20100398~~

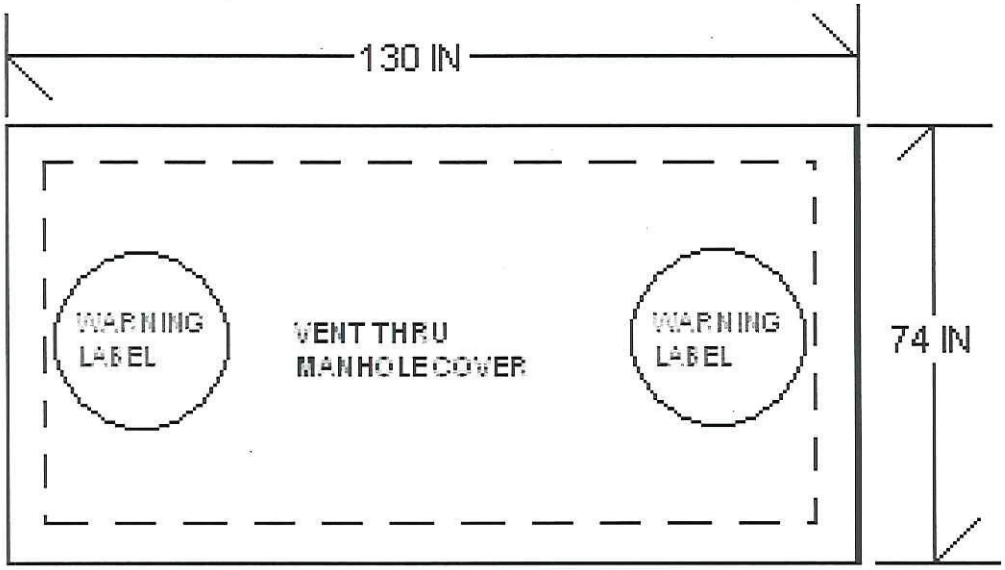

ANTIGO BLOCK CO. INC.
230 MILTON ST
P.O. BOX 34
ANTIGO, WI 54409
(715) 623-4837
(715) 623-5777

Conditionally APPROVED
DEPARTMENT OF COMMERCE
DIVISION OF SAFETY AND BUILDINGS
SEE CORRESPONDENCE

CAPACITY 1700 GAL
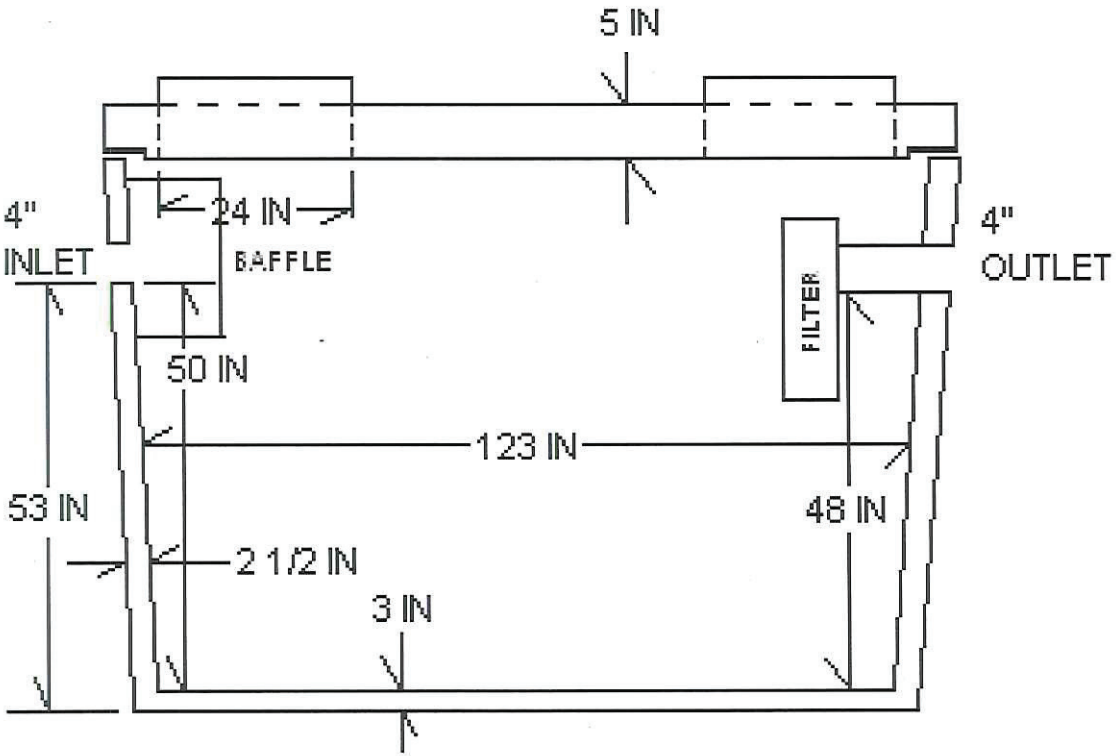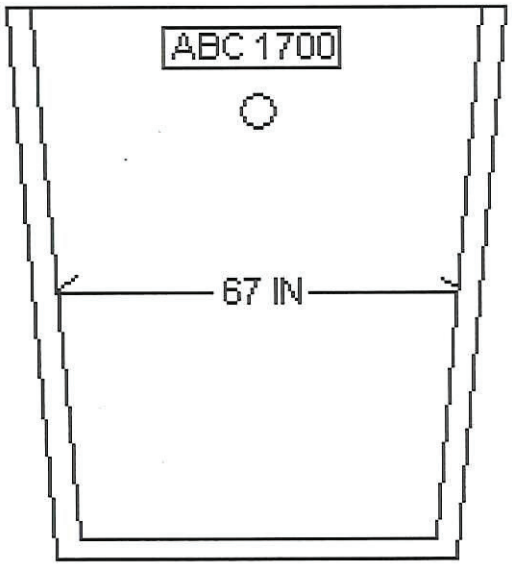
WEIGHT 10950 LBS