DIVISION OF INDUSTRY SERVICES
Plumbing Product Review
P.O. Box 7302
Madison, Wisconsin 53701-2658
TTY: Contact Through Relay

Governor Scott Walker **Laura Gutierrez, Secretary**

May 9, 2017

DEPT. OF SAFETY & PROF. SERVICES
SAFETY & BUILDINGS DIV.
TOM BRAUN
1400 E. WASHINGTON AVE.
PO BOX 7302
MADISON WI 53701-2658

Re: Description: POWTS COMPONENT MANUAL
Manufacturer: DEPT. OF SAFETY & PROF. SERVICES
Product Name: (trans id TDB) MOUND COMPONENT MANUAL FOR POWTS (VERSION 2.0)
Model Number(s): SBD-10691-P (N.01/01; R. 10/12) SEE ATTACHED
Product File No: 20170148

The specifications and/or plans for this plumbing product have been reviewed and determined to be in compliance with chapters SPS 382 through 384, Wisconsin Administrative Code, and Chapters 145 and 160, Wisconsin Statutes.

The Department hereby issues an approval based on the Wisconsin Statutes and the Wisconsin Administrative Code. This approval is valid until the end of May 2022.

This approval supersedes the approval issued on November 14, 2012 under product file number 20120167.

This approval is contingent upon compliance with the following stipulation(s):

- Approval of this POWTS Component Manual is for recognition for designs of systems that are covered by this manual. Systems that are designed, installed and maintained in accordance with this manual will provide treatment and dispersal of domestic wastewater in conformance with ch. SPS 383, Wis. Adm. Code.

- Approval of this POWTS Component Manual is for recognition for designs of systems that are covered by this manual. Systems that are designed, installed and maintained in accordance with this manual will provide equal distribution of effluent from a dose tank into a distribution cell of a soil treatment or dispersal component.

- Copies of this Component Manual are available through the submitter/manufacturer or downloaded from the department's webpage; see:

- http://dsps.wi.gov/sb/docs/sb-ppalopp/20170148.pdf

The department is in no way endorsing this product or any advertising, and is not responsible for any situation which may result from its use.

Sincerely,

Thomas Braun
Bureau of Technical services
Division of Industry Services
Dept. of Safety & Professional Services
Phone: 715-634-5124
Email: thomas.braun@wisconsin.gov

MOUND COMPONENT MANUAL

FOR PRIVATE ONSITE

WASTEWATER TREATMENT SYSTEMS
(VERSION 2.0)

October 2012

State of Wisconsin
Department of Safety & Professional Services
Division of Safety and Buildings

MOUND COMPONENT MANUAL
FOR PRIVATE ONSITE WASTEWATER TREATMENT SYSTEMS

TABLE OF CONTENTS

		Page
I.	Introduction and Specifications	3
II.	Definitions	6
III.	Description and Principle of Operation	7
IV.	Soil and Site Requirements	8
V.	Fill and Cover Material	9
VI.	Design	9
VII.	Site Preparation and Construction	21
VIII.	Operation, Maintenance and Performance Monitoring	23
IX.	References	24
X.	Mound Worksheet	25
XI.	Example Worksheet	33
XII.	Plan Submittal and Installation Inspection	40

Republished on October 2012 by Department of Safety & Professional Services
Division of Industry Services Publication SBD-10691-P (N 01/01; R. 10/12)

Previously Published in January 2001 by Department of Commerce, Division of Safety and Buildings

ADA Statement

The Department of Safety & Professional Services is an equal opportunity service provider and employer. If you need assistance to access services or need material in an alternate format, please contact the Department at (608) 266-3151. Deaf, hearing or speech-impaired callers may reach the Department through WI-TRS (Wisconsin Telecommunication Relay System).

I. INTRODUCTION AND SPECIFICATIONS

This Private Onsite Wastewater Treatment System (POWTS) component manual provides design, construction, inspection, operation, and maintenance specifications for a mound component. However, these items must accompany a properly prepared and reviewed plan acceptable to the governing unit to help provide a system that can be installed and function properly. Violations of this manual constitute a violation of chs. SPS 383 and 84, Wis. Adm. Code. The mound component must receive influent flows and loads less than or equal to those specified in Table 1. When designed, installed and maintained in accordance with this manual, the mound component provides treatment and dispersal of domestic wastewater in conformance with ch. SPS 383 of the Wis. Adm. Code. Final effluent characteristics will comply with s. SPS 383.41, Wis. Adm. Code when inputs are within the range specified in Tables 1 to 3.

Note: Detailed plans and specifications must be developed, and submitted for reviewed and approved by the governing unit having authority over the plan for the installation. Also, a Sanitary Permit must be obtained from the department or governmental unit having jurisdiction. See Section XII. for more details.

Table 1 **INFLUENT FLOWS AND LOADS**	
Design Wastewater flow (DWF)	≤ 5000 gal/day
Monthly average value of Fats, Oil and Grease (FOG)	≤ 30 mg/L
Monthly average value of five day Biochemical Oxygen Demand (BOD_5)	≤ 220 mg/L
Monthly average value of Total Suspended Solids (TSS)	≤ 150 mg/L
Design loading rate of fill	≤ 1.0 gal/ft^2/day if BOD_5 or TSS > 30 mg/L or ≤ 2.0 gal/ ft^2/day if BOD_5 and TSS ≤ 30 mg/L
Design loading rate of the basal area	= soil application rate of effluent with maximum monthly average values of BOD_5 and TSS of ≤ 30 mg/L when distribution component receives effluent with a BOD_5 and TSS of ≤ 30 mg/L or when fill material depth is ≥ 12 inches as measured at the D dimension.
Volume of a single dose to absorption component	≥ 5 times void volume of the distribution lateral (s) and ≤ 20% of the design wastewater flow
Design wastewater flow (DWF) from one and two-family dwellings	Based on s. SPS 383.43 (3), (4), or (5), Wis. Adm. Code

Table 1 INFLUENT FLOWS AND LOADS (continued)	
Design wastewater flow (DWF) from public facilities	≥ 150% of estimated daily wastewater flow in accordance with Table 4 of this manual or s. SPS 383.43 (6), Wis. Adm. Code
Linear loading rate for systems with in situ soils having a soil application rate of ≤ 0.3 gal/ft^2/day within 12 inches of fill material	≤ 4.5gal/ft/day
Wastewater particle size	≤ 1/8 inch
Distribution cell area per orifice	≤ 12 ft^2

Table 2 SIZE AND ORIENTATION	
Distribution cell width (A)[a]	≤ 10 feet
Total distribution cell area (A x B)[a]	≥ Design wastewater flow rate ÷ design loading rate of the fill material
Orientation	Longest dimension parallel to surface grade contours on sloping sites.
Deflection of distribution cell on concave slopes	≤ 10%
Fill material depth at up slope edge of distribution cell (D)[a]	1. ≥ 6 inches when fill is placed on in situ soil listed in Table 383.44-3, Wis. Adm. Code, having fecal coliform treatment capabilities of ≤ 36 inches, or 2. ≥ 12 inches, but not greater than 36 inches when fill is placed on in situ soil listed in Table 383.44-3, Wis. Adm. Code, having fecal coliform treatment capabilities of > 36 inches.
Distribution cell depth (F)[a]	≥ 8 inches + nominal size of distribution pipe
Depth of cover material at top center of distribution cell area (H)[a]	≥ 12 inches
Depth of cover material at top outer edge of distribution cell area (G)[a]	≥ 6 inches
Basal area	≥ Design wastewater flow rate ÷ Design loading rate of basal area as specified in Table 1

Note a: Letter corresponds to letters referenced in figures, formulas and on worksheets.

Table 3 OTHER SPECIFICATIONS	
Bottom of distribution cell	Level
Slope of original grade	≤ 25% in area of basal area of the mound
Depth of in situ soil to high groundwater elevation and bedrock under basal area	≥ 6 inches
Vertical separation between distribution cell infiltrative surface and seasonal saturation defined by redoximorphic features, groundwater, or bedrock	≥ Equal to depth required by s. SPS 383 Table 383.44-3, Wis. Adm. Code
Horizontal separation between distribution cells	≥ 3 ft.
Fill material	Meets ASTM Specification C-33 for fine aggregate
Size for basal area (for level sites) (B x W) [a]	Cell length x [Total mound width]
Size for basal area (for sloping sites) (B x {A +I})[a]	Cell length x [(# of cells x cell width) + ({# of cells – 1} x cell spacing) + down slope width]
Effluent application	**By use of pressure distribution network conforming to sizing methods of either Small Scale Waste Management Project publication 9.6, entitled "Design of Pressure Distribution Networks for Septic Tank – Soil Absorption Systems" or Dept. of Commerce publications SBD-10573-P or SBD-10706-P, entitled "Pressure Distribution Component Manual for Private Onsite Wastewater Treatment Systems"**
Piping Material	Meets requirements of s. SPS 384.30 (2), Wis. Adm. Code for its intended use
Distribution cell stone aggregate material	Meets requirements of s. SPS 384.30 (6) (i), Wis. Adm. Code
Fabric cover over distribution cell when stone aggregate is used	Geotextile fabric meeting s. SPS 384.30 (6) (g), Wis. Adm. Code
Number of observation pipes per distribution cell	≥ 2
Location of observation pipes for level components Location of observation pipes for components on a slope	**Observation pipes will be installed in each distribution cell so as to be representative of a cell's hydraulic performance.** **. be located such that there are a minimum of two installed in each dispersal cell at opposite ends from one another** **. be located near the dispersal cell ends** **. be at least 6 inches from the end wall and sidewall** **. be installed at an elevation to view the horizontal or level infiltrative surface within the dispersal cell.** **Observation pipes may be located less than 6 inches from end walls or side walls if specified in state–approved manufacturers' installation instructions.**
Maximum final slope of mound surface	≤ 3:1

Note a: Letter corresponds to letters referenced in figures, formulas and on worksheets.

Table 3 OTHER SPECIFICATIONS (continued)	
Cover material	Soil that will provide frost protection, prevent erosion and excess precipitation or runoff infiltration and allow air to enter the distribution cell
Grading of surrounding area	Graded to divert surface water around mound system
Limited activities	Unless otherwise specifically allowed in this manual, vehicular traffic, excavation, and soil compaction are prohibited in the basal area and 15 feet down slope of basal area, if there is a restrictive horizon that negatively affects treatment or dispersal
Installation inspection	In accordance with ch. SPS 383, Wis. Adm. Code
Management	In accordance with ch. SPS 383, Wis. Adm. Code and this manual

II. DEFINITIONS

Definitions not found in this section, are located in ch. SPS 381 of the Wisconsin Administrative Code or the terms use the standard dictionary definition.

A. "Basal Area" means the effective in situ soil surface area available for infiltration of partially treated effluent from the fill material.

B. "Deflection of distribution cell" means the ratio between the maximum distance between the down slope edge of a concave distribution cell to the length of a perpendicular line that intersects the furthest points of the contour line along the down slope edge of the distribution cell.

C. "Distribution cell area" means the area within the mound where the effluent is distributed into the fill material.

D. "Fill Material" means sand that meets specifications of ASTM Standard C33 for fine aggregate and is used along the sides of and under the distribution cell to provide treatment of effluent.

E. "Limiting Factor" means high groundwater elevation or bedrock.

F. "Mound" means an on-site wastewater treatment and dispersal component. The structure contains a distribution cell area surrounded by, and elevated above, the original land surface by suitable fill material. The fill material provides a measurable degree of wastewater treatment and allows effluent dispersal into the natural environment under various soil permeability.

G. "Original Grade" means that land elevation immediately prior to the construction of the mound system.

H. "Parallel to surface grade contours on sloping sites" means the mound is on the contour except that a 1% cross slope is allowed along the length of the mound. See Ch. SPS 383 Appendix A-383.44 ORIENTATION (6).

I. "Permeable Soil" means soil with textural classifications according to the U.S. Department of Agriculture, Natural Resource Conservation Service, classification system of silt loam to gravelly medium sand.

J. "Slowly Permeable Soil" means soil with textural classifications according to the U.S. Department of Agriculture, Natural Resource Conservation Service, classification system of clay loams and silty clay loams that exhibit a moderate grade of structure; and loams, silt loams, and silts with weak grades of structure; or soils with weak to moderate grades of platy structure.

K. "Unsaturated flow" means liquid flow through a soil media under a negative pressure potential. Liquids containing pathogens and pollutants come in direct contact with soil/fill material microsites, which enhances wastewater treatment by physical, biological, and chemical means.

L. "Vertical Flow" means the effluent flow path downward through soil or fill material, which involves travel along soil surfaces, or through soil pores.

M. "Vertical Separation" means the total depth of unsaturated soil that exists between the infiltrative surface of a distribution cell and limiting factor (as by redoximorphic features, groundwater or bedrock.

III. DESCRIPTION AND PRINCIPLE OF OPERATION

POWTS mound component operation is a two-stage process involving both wastewater treatment and dispersal. Treatment is accomplished predominately by physical and biochemical processes within the fill material and in situ soil. The physical characteristics of the influent wastewater, influent loading rate, temperature, and the nature of the receiving fill material and in situ soil affect these processes.

Physical entrapment, increased retention time, and conversion of pollutants in the wastewater are important treatment objectives accomplished under unsaturated conditions. Pathogens contained in the wastewater are eventually deactivated through filtering, retention, and adsorption by the fill material. In addition, many pollutants are converted to other chemical forms by oxidation processes.

Dispersal is primarily affected by the depth of the unsaturated receiving soils, their hydraulic conductivity, land slope, and the area available for dispersal.

The mound consists of fill material, a distribution cell, and cover material. Effluent is dispersed into the distribution cell where it flows through the fill material and undergoes biological, chemical and physical treatment and then passes into the underlying soil for further treatment and dispersal to the environment.

Cover material consisting of material that provides erosion protection, a barrier to excess precipitation infiltration, and allows gas exchange. See Figure 1, for a typical mound system.

The in situ soil serves in combination with the fill, as treatment media and it also disperses the treated effluent.

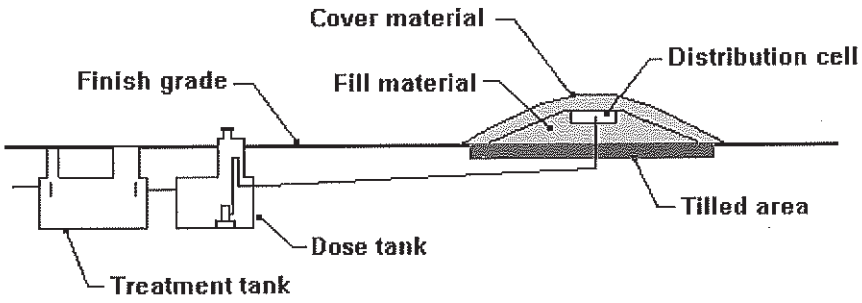

Figure 1 - A cross-section-of a mound system for POWTS.

IV. SOIL AND SITE REQUIREMENTS

Every mound design is ultimately matched to the given soil and site.

The design approach presented in this manual is based on criteria that all applied wastewater is successfully transported away from the system, that it will not affect subsequent wastewater additions, and that the effluent is ultimately treated.

A. Minimum Soil Depth Requirements - The minimum soil factors required for successful mound system performance are listed in the introduction and specification section of this package.

Soil evaluations must be in accordance with ch. SPS 385 of the Wis. Adm. Code. In addition, soil application rates must be in accordance with ch. SPS 383 of the Wis. Adm. Code.

B. Other Site Considerations -

1. Slopes - The slope on which a mound is to be installed may not indicate the direction of groundwater movement. If there is documentation that the direction of groundwater movement is different than the slope of the land, the direction of groundwater movement must be considered during mound design.

   On a crested site the fill can be situated such that the effluent can move laterally down both slopes. A level site allows lateral flow in all directions, but may present problems as the water table could rise higher beneath the fill in slowly permeable soils. The sloping site allows the liquid to move in one direction away from the fill. Figure 3 shows a cross-section of a mound and the effluent movement in a slowly permeable soil on a sloping site. Systems that are installed on a concave slope may have a deflection that does not exceed that allowed in Table 2.

   Mound components rely on lateral effluent movement through the upper soil horizons. Lateral movement becomes more important as soil permeability decreases.

2. Mound location - In open areas, exposure to sun and wind increases the assistance of evaporation and transpiration in the dispersal of the wastewater.

3. Sites with trees and large boulders - Generally, sites with large trees, numerous smaller trees or large boulders are less desirable for installing a mound system because of difficulty in preparing the surface and the reduced infiltration area beneath the mound. Areas that are

occupied with rock fragments, tree roots, stumps and boulders reduce the amount of soil available for proper treatment. If no other site is available, trees in the basal area of the mound must be cut off at ground level. A larger fill area is necessary when any of the above conditions are encountered, to provide sufficient infiltrative area.

4. Setback distances - The setbacks specified in ch. SPS 383, Wis. Adm. Code for soil subsurface treatment/dispersal component apply to mound systems. The distances are measured from the up slope and end slope edge of the distribution cell and from the down slope toe of the mound. See also setback distances from toe of mound system to wells in s. NR 812.08, Table A.

V. FILL AND COVER MATERIAL

A. Fill Material - The fill material and its placement are one of the most important components of the mound system. Quality control of the fill material is critical to system performance, each truckload of material must meet specifications for the fill.

Determining whether a proposed fill material is suitable or not requires that a textural analysis be performed. The standard method to be used for performing this analysis conforms to ASTM C-136, Method for Sieve Analysis of Fine and Coarse Aggregates, and ASTM E-11, Specifications for Wire-Cloth Sieves for Testing Purposes, Annual Book of ASTM Standards, Volume 04.02. Information concerning these methods can also be obtained from Methods of Soils Analysis Part 1, C. A. Black, ed., ASA, Monograph #9, American Society of Agronomy, Inc., 1975.

B. Cover material - The cover material is a soil that will allow air exchange while promoting plant growth. The gas exchange will increase the treatment performance of the system by providing oxygen to the wastewater to help ensure aerobic conditions in the mound system. The plant growth will provide frost protection in the winter season. Clays may not be used for cover material as they will restrict oxygen transfer. Often, excavated soil from the site can be used. Seeding or other means must be done to prevent erosion of the mound.

VI. DESIGN

A. Location, Size and Shape - Placement, sizing and shaping of the mound and the distribution cell within the mound must be in accordance with this manual. The means of pressurizing the distribution network must provide equal distribution of the wastewater. A pressurized distribution network using a **method of sizing** as described in either Small Scale Waste Management Project publication 9.6, entitled "Design of Pressure Distribution Networks for Septic Tank – Soil Absorption System" or Dept. of Commerce publications SBD-10573-P or SBD-10706-P, entitled "Pressure Distribution Component Manual for Private Onsite Wastewater Treatment Systems" is acceptable.

B. Component Design - Design of the mound system is based upon the design wastewater flow and the soil characteristics. It must be sized such that it can accept the design wastewater flow without causing surface seepage or groundwater pollution. Consequently, the basal area, which is the in situ soil area beneath the fill, must be sufficiently large enough to absorb the effluent

into the underlying soil. The system must also be designed to avoid encroachment of the water table into the required minimum unsaturated zone.

Design of the mound includes the following three steps: (A) calculating design wastewater flow, (B) design of the distribution cell within the fill, (C) design of the entire mound. This includes calculating total width, total length, system height, distribution lateral location and observation pipes. Each step is discussed. A design example is provided in section XI of the manual. The letters for the various dimensions correlate with those in Figures 2 and 3.

Step A. Design Wastewater Flow Calculations

One- and two-family dwellings. Distribution cell size for one and two-family dwelling application is determined by calculating the design wastewater flow (DWF). To calculate DWF use, Formulas 1, 2 or 3. Formula 1 is for combined wastewater flows, which consist of blackwater, clearwater and graywater. Formula 2 is for only clearwater and graywater. Formula 3 is blackwater only.

Formula 1	Formula 2	Formula 3
Combined wastewater	Clearwater & Graywater	Blackwater
DWF = 150 gal/day/bedroom	DWF = 90 gal/day/bedroom	DWF = 60 gal/day/bedroom

Public Facilities. Distribution cell size for public facilities application is determined by calculating the DWF using Formula 4. Only facilities identified in Table 4 are included in this manual. Estimated daily wastewater flows are determined in accordance with Table 4 or s. SPS 383.43(6), Wis. Adm. Code. Many commercial facilities have high BOD_5, TSS and FOG (fats, oils and grease), which must be pretreated in order to bring their values down to an acceptable range before entering into the mound component described in this manual.

Formula 4

DWF = Sum of each estimated wastewater flow per source per day x 1.5

Where 1.5 = Conversion factor to convert estimated wastewater flow to design wastewater flow

Table 4
Public Facility Wastewater Flows

Source	Unit	Estimated Wastewater Flow (gpd)
Apartment or Condominium	Bedroom	100
Assembly hall (no kitchen)	Person (10 sq. ft./person)	1.3
Bar or cocktail lounge (no meals served)	Patron (10 sq. ft./patron)	4
Bar or cocktail lounge* (w/meals – all paper service)	Patron (10 sq. ft./patron)	8
Beauty salon	Station	90
Bowling alley	Bowling lane	80
Bowling alley (with bar)	Bowling lane	150
Camp, day and night	Person	25
Camp, day use only (no meals served)	Person	10
Campground or Camping Resort	Space, with sewer connection and/or service building	30
Campground sanitary dump station	Camping unit or RV served	25
Catch basin	Basin	65
Church (no kitchen)	Person	2
Church* (with kitchen)	Person	5
Dance hall	Person (10 sq. ft./person)	2
Day care facility (no meals prepared)	Child	12
Day care facility* (with meal preparation)	Child	16
Dining hall* (kitchen waste only without dishwasher and/or food waste grinder)	Meal served	2
Dining hall* (toilet and kitchen waste without dishwasher and/or food waste grinder)	Meal served	5
Dining hall* (toilet and kitchen waste with dishwasher and/or food waste grinder)	Meal served	7
Drive-in restaurant* (all paper service with inside seating)	Patron seating space	10
Drive-in restaurant* (all paper service without inside seating)	Vehicle space	10
Drive-in theater	Vehicle space	3
Employees (total all shifts)	Employee	13
Floor drain (not discharging to catch basin)	Drain	25
Gas station / convenience store	Patron (minimum 500 patrons)	3
Gas station (with service bay) Patron Service bay	 Patron Service bay	 3 50
Hospital*	Bed space	135
Hotel, motel or tourist rooming house	Room	65
Medical office building Doctors, nurses, medical staff Office personnel Patients	 Person Person Person	 50 13 6.5
Migrant labor camp (central bathhouse)	Employee	20
Mobile Home (Manufactured home) (served by its own POWTS)	Bedroom	100
Mobile home park	Mobile home site	200

* = May be high strength waste

Table 4
Public Facility Wastewater Flows
(continued)

Source	Unit	Estimated Wastewater Flow (gpd)
Nursing, Rest Home, Community Based Residential Facility	Bed space	65
Outdoor sport facilities (toilet waste only)	Patron	3.5
Parks (toilets waste only)	Patron (75 patrons/acre)	3.5
Parks (toilets and showers)	Patron (75 patrons/acre)	6.5
Public shower facility	Shower taken	10
Restaurant*, 24-hr. (dishwasher and/or food waste grinder only)	Patron seating space	4
Restaurant*, 24-hr. (kitchen waste only without dishwasher and/or food waste grinder)	Patron seating space	12
Restaurant, 24-hr. (toilet waste)	Patron seating space	28
Restaurant*, 24-hr. (toilet and kitchen waste without dishwasher and/or food waste grinder)	Patron seating space	40
Restaurant*, 24-hr. (toilet and kitchen waste with dishwasher and/or food waste grinder)	Patron seating space	44
Restaurant* (dishwasher and/or food waste grinder only)	Patron seating space	2
Restaurant* (kitchen waste only without dishwasher and/or food waste grinder)	Patron seating space	6
Restaurant (toilet waste)	Patron seating space	14
Restaurant* (toilet and kitchen waste without dishwasher and/or food waste grinder)	Patron seating space	20
Restaurant* (toilet and kitchen waste with dishwasher and/or food waste grinder)	Patron seating space	22
Retail store	Patron (70% of total retail area ÷ 30 sq. ft. per patron)	1
School* (with meals and showers)	Classroom (25 students/classroom)	500
School* (with meals or showers)	Classroom (25 students/classroom)	400
School (without meals or showers)	Classroom (25 students/classroom)	300
Self-service laundry (toilet waste only)	Clothes washer	33
Self-service laundry (with only residential clothes washers)	Clothes washer	200
Swimming pool bathhouse	Patron	6.5

* = May be high strength waste

Step B. Design of the Distribution Cell - This section determines the required infiltrative surface area of the distribution cell/fill interface, as well as the dimensions of the distribution network within the fill.

1. Sizing the Distribution Cell - The minimum bottom area of the distribution cell is determined by dividing the design wastewater flow per day by the design loading rate of the fill material. As specified in Table 1, the design loading rate of the infiltration surface of the distribution cell is:

   ≤ 1.0 gal/ft^2/day if BOD_5 or TSS > 30 mg/L or

   ≤ 2.0 gal/ft^2/day if BOD_5 or TSS $\leq$ 30 mg/L

   Using the above information, the infiltrative surface area of the distribution cell area is determined by using Formula 5.

   Formula 5

   Area = DWF ÷ design loading rate of the fill material.

   For concave systems the actual distribution cell length must be checked to determine if the cell area is sufficient. See Step B 3 for further information.

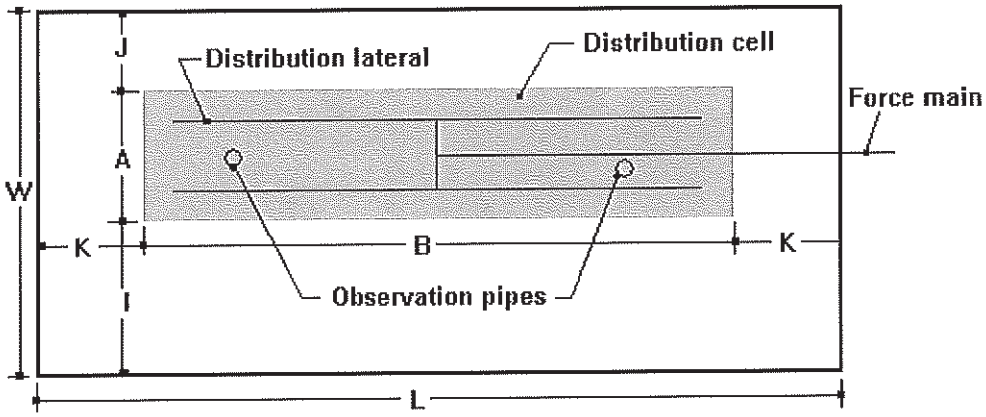

Figure 2 - Detailed plan view of a mound.
(For location of observation pipes, see IV. DESIGN, Step C 7.)

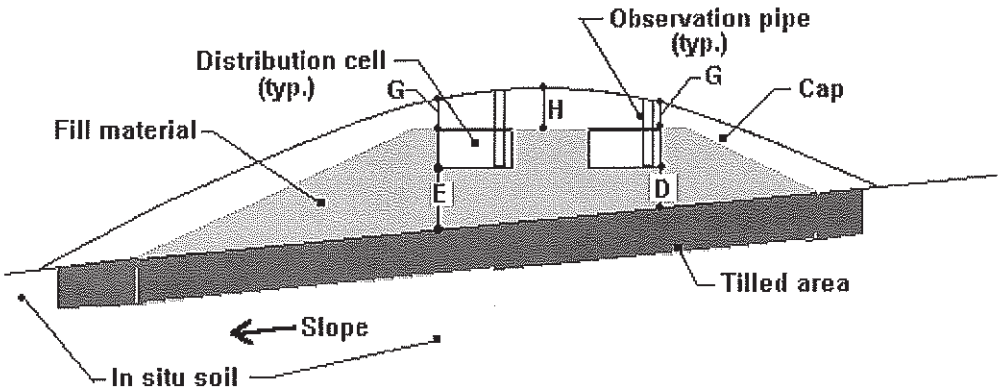

Figure 3 - Detailed cross-section of a mound.

2. System Configuration - The distribution cell must be longer than it is wide. Maximum width of the distribution cell is 10 feet. The maximum length of the distribution cell is dependent on setback requirements and soil evaluation.

   The distribution cell is aligned with its longest dimension parallel to surface grade contours on sloping sites as required by the specifications of this package so as not to concentrate the effluent into a small area as it moves laterally down slope.

   The bottom of the distribution cell is level so one area of the distribution cell is not overloaded.

   The dimensions for the distribution cell are calculated using Formulas 6 or 7. Formula 6 is used when the in situ soil has a soil application rate of greater then 0.3 gal/ft^2/day. Formula 7 must be used to check for linear loading rate for the system when the in situ soil within 12 inches of the fill material has a soil application rate of $\leq$ 0.3 gal/ft^2/day. When the in situ soil within 12 inches of the fill material has a soil application rate of $\leq$ 0.3 gal/ft^2/day the linear loading rate my not exceed 4.5 gal/ft/day.

   Formula 6

   Area of distribution cell = A x B.

   Where: A = Distribution cell width (Max. allowed is 10 ft.)

   B = Distribution cell length

   Formula 7

   Linear Loading Rate = DWF ÷ B

   Where: DWF = Design wastewater flow

   B = Distribution cell length

3. Concave Mound Configuration – The maximum deflection of a concave distribution cell of a mound system is 10%. The percent of deflection of a distribution cell is determined by dividing the amount of deflection by the effective distribution cell length of the concave distribution cell. The deflection is the maximum distance between the down

slope edge of a concave distribution cell to the length of a perpendicular line that intersects furthest points of the contour line along the down slope edge of the distribution cell. The effective distribution cell length of the concave distribution cell is the distance between the furthest points along the contour line of the down slope edge of the concave distribution cell. See Figures 4 and 5.

The deflection of a distribution cell on concave slopes is calculated using Formula 8.

Formula 8

Percent of Deflection = (Deflection ÷ Effective distribution cell length) x 100

Where: Deflection = Maximum distance between the down slope edge of a concave distribution cell to the length of a perpendicular line that intersects furthest points of the contour line along the down slope edge of the distribution cell

Effective distribution cell length = Distance between the furthest points along the contour line of the down slope edge of the concave distribution cell

100 = Conversion factor

The actual distribution cell length must be checked to determine if the cell area is sufficient. The actual distribution cell length is calculated using Formula 9.

Formula 9

Actual distribution cell length = [(% of deflection x 0.00265) + 1] x effective distribution cell length

Where: % of deflection = Determined by Formula 8

0.00265 = Conversion factor from percent to feet

1 = Constant

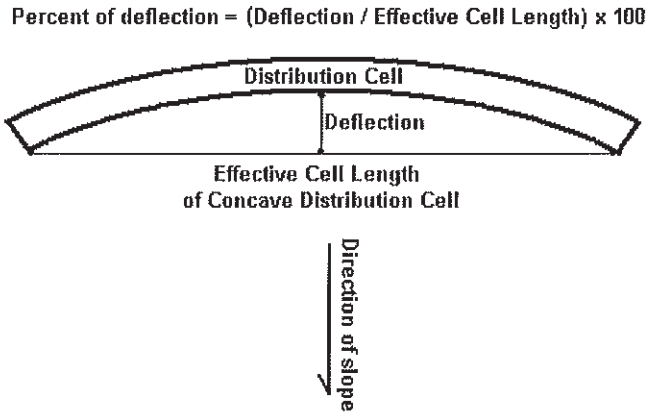

Figure 4– Simple Concave Distribution Cell

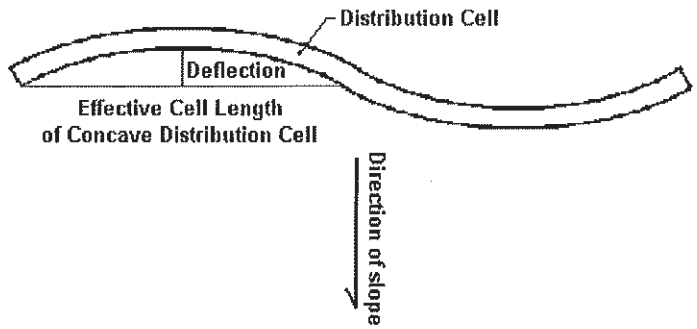

Percent of deflection = (Deflection / Effective Cell Length of Concave Distribution Cell) x 100

Figure 5– Complex Concave Distribution Cell

Step C. Sizing the Mound

1. Mound Height - The mound height on sloping sites is calculated using Formula 10.

Formula 10

Mound Height = (D + E) ÷2 + F + H

Where: D = Sand fill depth
E = Down slope fill depth
F = Distribution cell depth
H = Cover material depth

2. Fill Depth - The depth of fill under the distribution cell is based on the minimum depth of unsaturated soil required for treatment listed in Table 383.44-3, Wis. Adm. Code. The minimum fill depth is 6 inches, but not greater than 36 inches when the soil listed in Table 383.44-3, Wis. Adm. Code, is 36 inches or less. The minimum fill depth is 12 inches, but not greater than 36 inches when the soil listed in Table 383.44-3, Wis. Adm. Code, is greater than 36 inches. A minimum unsaturated flow depth required for proper treatment of the wastewater is as required by Table 383.44-3, Wis. Adm. Code.

   For sloping sites the fill depth below down slope edge of distribution cell (E) ≥ D + [% slope of original grade as a decimal x width of distribution cell (A)]

3. Distribution Cell Depth - The distribution cell depth (F) provides wastewater storage within the distribution cell. A minimum depth includes 6 inches beneath the distribution pipe and approximately 2 inches above the distribution piping, as stated in the specification section of this manual. This space may be provided with the use of stone aggregate or leaching chambers. To calculate the minimum cell depth, use Formula 11.

Formula 11

Distribution cell depth (F) = 8 inches + nominal pipe size of distribution lateral

4. Cover Material - The cover material (G & H) provides frost protection and a suitable growth medium for vegetation. For design purposes, use a depth of 12 inches above the center of the distribution cell (H) and 6 inches above the outer edge of the distribution cell (G).

   Cover material depth at distribution cell center (H) ≥ 12 inches

   Cover material depth at distribution cell edges (G) ≥ 6 inches

5. Fill Length and Width - The length and width of the fill are dependent upon the length and width of the distribution cell, fill depth and side slopes of the fill. Side slopes may not be steeper than 3:1 over the basal area, (i.e. 3 feet of run to every 1 foot of rise). Soil having textures other than those specified for the fill media may be used to make the slopes gentler than the required 3:1 slopes, once the 3:1 slope exists with the fill material. The distribution cell length is generally perpendicular to the direction of slope so the effluent is spread out along the contour.

   The fill length consists of the end slopes (K) and the distribution cell length (B). The fill width consists of the up slope width (J), the distribution cell width (A), and the down slope width (I). On sloping sites the up slope width (J) is less while the down slope width (I) is greater than on a level site to maintain the 3:1 side slope (see Fig. 2). To calculate the up slope and down slope widths when a 3:1 side slope is maintained, multiply the calculated width by the correction factor found by using the following equations or the correction factor listed in Table 5.

   Up slope correction factor = 100 ÷ [100 + (3 x % of slope)]
   Down slope correction factor = 100 ÷ [100 - (3 x % of slope)]

Table 5 Down slope and up slope width correction factors		
Slope %	Down slope correction factor	Up Slope correction factor
0	1.00	1.00
1	1.03	0.97
2	1.06	0.94
3	1.10	0.915
4	1.14	0.89
5	1.18	0.875
6	1.22	0.85
7	1.27	0.83
8	1.32	0.81
9	1.37	0.79
10	1.43	0.77
11	1.49	0.75
12	1.56	0.735
13	1.64	0.72
14	1.72	0.705
15	1.82	0.69
16	1.92	0.675
17	2.04	0.66
18	2.17	0.65
19	2.33	0.64
20	2.50	0.625
21	2.70	0.61
22	2.94	0.60
23	3.23	0.59
24	3.57	0.58
25	4.00	0.57

The most critical dimensions of the fill are: fill depths (D) & (E), distribution cell length (B), distribution cell width (A), and the down slope width (I).

End slope width (K) = Total fill at center of distribution cell {[(D + E) ÷2]+ F + H} x horizontal gradient of selected side slope (3 if 3:1 side-slope)

Fill Length (L) = Distribution cell length (B) + 2 x end slope width (K)

Up slope width (J) = Fill depth at up slope edge of distribution cell (D + F + G) x horizontal gradient of side slope (3 if 3:1) x slope correction factor {100 ÷ [100 + (3 x % of slope)] if 3:1}

Down slope width (I) = Fill depth at down slope edge of distribution cell (E + F + G) x horizontal gradient of side slope (3 if 3:1) x slope correction factor {100 ÷ [100 - (3 x % of slope)] if 3:1}

Fill Width (W) = Up slope width (J) + down slope width (I) + width of distribution cell (A)

These calculations result in the fill material extending at least 6 inches horizontally from the top edges of the distribution cell as noted in Figure 6.

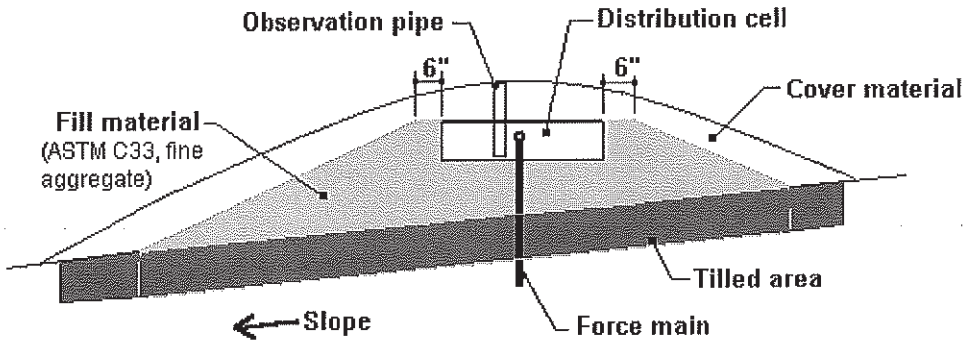

Figure 6 Cross-section of a Mound System

6. Basal Area - The basal area is the in situ soil/fill interface between the soil and the fill material. Its function is to accept the effluent from the fill, assist the fill in treating the effluent, and transfer the effluent to the subsoil beneath the fill or laterally to the subsoil outside of the fill.

   The soil infiltration rate of the in situ soil determines how much basal area is required. When the wastewater applied to the mound has values for BOD_5 and TSS of ≤ 30 mg/L or if there is at least 12 inches of fill material beneath the distribution cell the soil application rates for the basal area may be those specified in Table 383.44-1 or -2 for maximum monthly average BOD_5 and TSS of ≤ 30 mg/L.

   For level sites, the total basal area, excluding end slope area [length of distribution cell (B) x width of fill and cover (W)] beneath the fill and soil cover is available for effluent absorption into the soil (see Figure 7a). For sloping sites, the available basal area is the area down slope of the up slope edge of the distribution cell to the down slope edge of the fill and soil cover or (A + I) times the length of the distribution cell (B) (see Figure 7b). The up slope width and end slopes are not included as part of the total basal area.

   It is important to compare the required basal area to the available basal area. The available basal area must equal or exceed the required basal area.

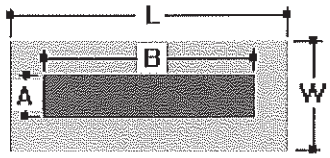

Figure 7a Level site

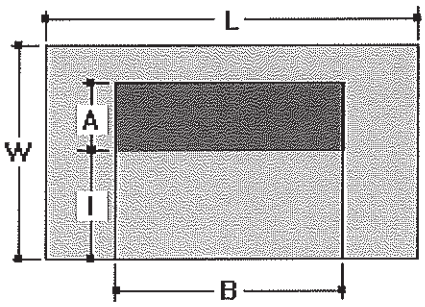

Figure 7b One direction slope

Basal area required = DWF ÷ Infiltration rate of in situ soil

Basal area available = B x W on a level site or = B x (A+I) on a sloping site.

If sufficient area is not available for the given design and site conditions, corrective action is required to increase (J) and (I) on level sites or (I) on sloping sites.

7. Location of the observation pipes.

Observation pipes will be installed in each distribution cell so as to be representative of a cell's hydraulic performance.

- be located such that there are a minimum of two installed in each dispersal cell at opposite ends from one another
- be located near the dispersal cell ends
- be at least 6 inches from the end wall and sidewall
- be installed at an elevation to view the horizontal or level infiltrative surface within the dispersal cell

Observation pipes may be located less than 6 inches from end walls or side walls if specified in state–approved manufacturers' installation instructions.

Step D. Distribution Network and Dosing System A pressurized distribution network based on a **method of sizing** as described in either Small Scale Waste Management Project publication 9.6, entitled "Design of Pressure Distribution Networks for Septic Tank – Soil Absorption Systems" or Dept. of Commerce publications SBD-10573-P or SBD-10706-P, entitled "Pressure Distribution Component Manual for Private Onsite Wastewater Treatment Systems" is acceptable.

VII. SITE PREPARATION AND CONSTRUCTION

Procedures used in the construction of a mound system are just as critical as the design of the system. A good design with poor construction results in system failure. It is emphasized that the soil only be tilled when it is not frozen and the moisture content is low to avoid compaction and puddling. The construction plan to be followed includes:

A. Equipment - Proper equipment is essential. Track type tractors or other equipment that will not compact the mound area or the down slope area are required.

B. Sanitary Permit - Prior to the construction of the system, a sanitary permit, obtained for the installation must be posted in a clearly visible location on the site. Arrangements for inspection(s) must also be made with the department or governmental unit issuing the sanitary permit.

C. Construction Procedures

1. Check the moisture content of the soil to a depth of 8 inches. Smearing and compacting of wet soil will result in reducing the infiltration capacity of the soil. Proper soil moisture content can be determined by rolling a soil sample between the hands. If it rolls into a 1/4-inch wire, the site is too wet to prepare. If it crumbles, site preparation can proceed. If the site is too wet to prepare, do not proceed until it dries.

2. Lay out the fill area on the site so that the distribution cell runs perpendicular to the direction of the slope.

3. Establish the original grade elevation (surface contour) along the up slope edge of the distribution cell. This elevation is used throughout the mound construction as a reference to determine the bottom of the distribution cell, lateral elevations, etc., and is referenced to the permanent bench mark for the project. A maximum of 4 inches of sand fill may be tilled into the surface.

4. Determine where the force main from the dosing chamber will connect to the distribution system in the distribution cell. Place the pipe either before tilling or after placement of the fill. If the force main is to be installed in the down slope area, the trench for the force main may not be wider then 12 inches.

5. Cut trees flush to the ground and leave stumps, remove surface boulders that can be easily rolled off, remove vegetation over 6 inches long by mowing and removing cut vegetation. Prepare the site by breaking up, perpendicular to the slope, the top 7-8 inches so as to eliminate any surface mat that could impede the vertical flow of liquid into the in situ soil. When using a moldboard plow, it should have as many bottoms as possible to reduce the number of passes over the area to be tilled and minimize compaction of the subsoil. Tilling with a moldboard plow is done along contours. Chisel type plowing is highly recommended especially in fine textured soils. Rototilling or other means that pulverize the soil is not acceptable. The important point is that a rough, unsmeared surface be left. The sand fill will intermingle between the clods of soil, which improves the infiltration rate into the natural soil.

   Immediate application of at least 6 inches of fill material is required after tilling. All vehicular traffic is prohibited on the tilled area. For sites where the effluent may move laterally, vehicle traffic is also prohibited for 15 ft. down slope and 10 ft. on both sides of

level sites. If it rains after the tilling is completed, wait until the soil dries out before continuing construction, and contact the local inspector for a determination on the damage done by rainfall.

6. Place the approved sand fill material, around the edge of the tilled area being careful to leave adequate perimeter area, not covered by the sand fill, on which to place the soil cover. There should be approximately two feet of basal area adjacent to the mound perimeter that is not covered by the sand fill. This area serves to tie the soil cover into the natural surface material that has been tilled and helps seal the toe from leakage. Work from the end and up slope sides. This will avoid compacting the soils on the down slope side, which, if compacted, affects lateral movement away from the fill and could cause surface seepage at the toe of the fill on slowly permeable soils.
7. Move the fill material into place using a small track type tractor with a blade or a large backhoe that has sufficient reach to prevent compaction of the tilled area. Do not use a tractor/backhoe having tires. Always keep a minimum of 6 inches of fill material beneath tracks to prevent compaction of the in situ soil.
8. Place the fill material to the required depth.
9. Form the distribution cell. Hand level the bottom of the distribution cell. If using leaching chambers, hand tamp fill where chambers will be located.

NOTE: If using leaching chambers go to step 15.

10. Install the required observation pipes with the bottom 6 inches of the observation pipe slotted. Installations of all observation pipes include a suitable means of anchoring. See Figure 8.
11. Place the stone aggregate in the distribution cell. Level the stone aggregate to the design depth.

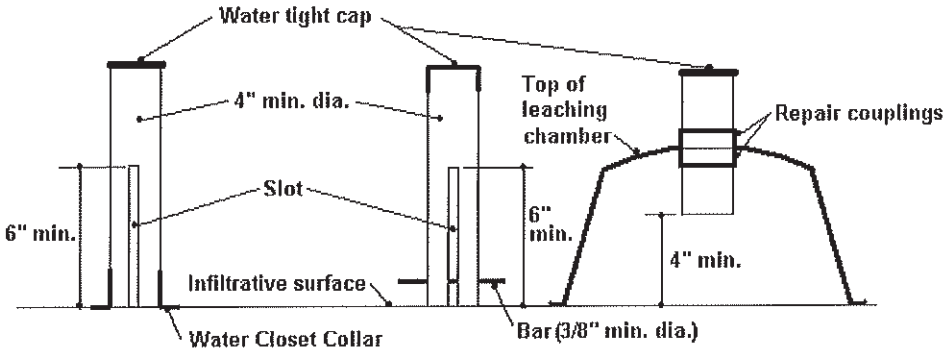

Figure 8 – Observation Pipes

12. Shape the sides with additional fill to the desired slopes.
13. Place the effluent distribution lateral(s), as determined from the pressure distribution design, on the stone aggregate. Connect the lateral(s) using the needed connections and piping to the force main pipe from the dosing chamber. Slope the piping from the lateral(s) to the force main pipe. Lay the effluent distribution lateral(s) level. All pipes must drain after dosing.

14. Place stone aggregate over the distribution network and the entire distribution cell until the elevation of the stone aggregate is at least 2 inches above the top of the distribution network.

NOTE: If using stone aggregate go to step 17.

15. Install the leaching chambers and pressure distribution piping as instructed by the leaching chamber manufacturer's instructions, pressure distribution design and applicable sections of ch. SPS 382, 83 and 84, Wis. Adm. Code.

16. Install an observation pipe in each row of leaching chambers.

17. If stone aggregate is used, place geotextile fabric conforming to requirements of ch. SPS 384, Wis. Adm. Code, over the stone aggregate.

18. Place cover material on the top of the geotextile fabric and extend the soil cover to the boundaries of the overall component.

19. Complete final grading to divert surface water drainage away from mound. Sod or seed and mulch the entire mound component.

VIII. OPERATION, MAINTENANCE AND PERFORMANCE MONITORING

A. The component owner is responsible for the operation and maintenance of the component. The county, department or POWTS service contractor may make periodic inspections of the components, checking for surface discharge, treated effluent levels, etc.

   The owner or owner's agent is required to submit necessary maintenance reports to the appropriate jurisdiction and/or the department.

B. Design approval and site inspections before, during, and after the construction are accomplished by the county or other appropriate jurisdictions in accordance to ch. SPS 383 of the Wis. Adm. Code.

C. Routine and preventative maintenance aspects:

   1. Treatment and distribution tanks are to be inspected routinely and maintained when necessary in accordance with their approvals.

   2. Inspections of the mound component performance are required at least once every three years. These inspections include checking the liquid levels in the observation pipes and examination for any seepage around the mound component.

   3. Winter traffic on the mound is not advised to avoid frost penetration and to minimize compaction.

   4. A good water conservation plan within the house or establishment will help assure that the mound component will not be overloaded.

D. User's Manual: A user's manual is to accompany the component. The manual is to contain the following as a minimum:

1. Diagrams of all components and their location. This should include the location of the reserve area, if one is provided.
2. Names and phone numbers of local health authority, component manufacturer or POWTS service contractor to be contacted in the event of component failure or malfunction.
3. Information on periodic maintenance of the component, including electrical/mechanical components.
4. Information on limited activities on reserve area if provided.

E. Performance monitoring must be performed on mound systems installed under this manual.

1. The frequency of monitoring must be:

a. At least once every three years following installation and,

b. At time of problem, complaint, or failure.

2. The minimum criteria addressed in performance monitoring of mound systems are:

   a. Type of use.
   b. Age of system.
   c. Nuisance factors, such as odors or user complaints.
   d. Mechanical malfunction within the system including problems with valves or other mechanical or plumbing components.
   e. Material fatigue or failure, including durability or corrosion as related to construction or structural design.
   f. Neglect or improper use, such as exceeding the design rate, poor maintenance of vegetative cover, inappropriate cover over the mound, or inappropriate activity over the mound.
   g. Installation problems such as compaction or displacement of soil, improper orientation or location.
   h. Pretreatment component maintenance, including dosing frequency, structural integrity, groundwater intrusion or improper sizing.
   i. Dose chamber maintenance, including improper maintenance, infiltration, structural problems, or improper sizing.
   j. Distribution piping network, including improper maintenance or improper sizing.
   k. Ponding in distribution cell, prior to the pump cycle, is evidence of development of a clogging mat or reduced infiltration rates.
   l. Siphon or pump malfunction including dosing volume problems, pressurization problems, breakdown, burnout, or cycling problems.
   m. Overflow/seepage problems, as shown by evident or confirmed sewage effluent, including backup if due to clogging.

4. Reports are to be submitted in accordance with ch. SPS 383, Wis. Adm. Code..

IX. REFERENCES

"Wisconsin Mound Soil Absorption System: Siting, Design and Construction." Converse, J.C., and E. J. Tyler. Publication 15.22, Small Scale Waste Management Project., 1 Agriculture Hall, University of Wisconsin, Madison, WI.

X. MOUND WORKSHEET

A. SITE CONDITIONS

Evaluate the site and soils report for the following:

- Surface water movement.
- Measure elevations and distances on the site so that slope, contours and available areas can be determined.
- Description of several soil profiles where the component will be located.
- Determine the limiting conditions such as bedrock, high groundwater level, soil application rates, and setbacks.

Slope - ____%

Occupancy – One or Two-Family Dwelling - _____ (# of bedrooms)

Public Facility - _____ gal/day (Estimated wastewater flow)

Depth to limiting factor - _____inches

Minimum depth of unsaturated soil required by Table 383.44-3, Wis. Adm. Code - ___ inches

Soil application rate of in situ soil used - _____ gal/ft^2/day

FOG value of effluent applied to component - _____ mg/L

BOD_5 value of effluent applied to component - _____ mg/L

TSS value of effluent applied to component - _____ mg/L

Fecal Coliform monthly geometric mean value of effluent applied to component > 10^4 cfu/100ml __Yes __ No

Type of distribution cell - __ Stone aggregate or __ Leaching chamber

B. DESIGN WASTEWATER FLOW (DWF)

<u>One or Two-family Dwelling.</u>

Combined wastewater flow:

DWF = 150 gal/day/bedroom x # of bedrooms

= 150 gal/day/bedroom x _____# of bedrooms

= _____ gal/day

Clearwater and graywater only:

DWF = 90 gal/day/bedroom x # of bedrooms

= 90 gal/day/bedroom x _____# of bedrooms

= _____ gal/day

Blackwater only:

DWF = 60 gal/day/bedroom x # of bedrooms

= 60 gal/day/bedroom x _____# of bedrooms

= _____ gal/day

Public Facilities.

DWF = Estimated wastewater flow x 1.5

= _____ gal/day x 1.5

= _____ gal/day

C. DESIGN OF THE DISTRIBUTION CELL

1. Total size of the Distribution Cell(s) area

   a. Loading rate of fill material = ___ ≤ 1.0 gal/ft^2/day if BOD_5 or TSS > 30 mg/L or
   ___≤ 2.0 gal/ft^2/day if BOD_5 or TSS ≤ 30 mg/L

   b. Bottom area of total distribution cell area = Design wastewater flow ÷ loading rate of fill as determined in C.1.a.

   Distribution cell area = _____ gal/day ÷ _____ gal/ft^2/day

   Distribution cell area = _____ft^2

2. Distribution Cell Configuration

   a. Distribution cell width(s) (A) = ___ feet (≤ 10 ft.) and number of distribution cells = ___cells

   b. Distribution cell length (B) = Bottom area of distribution cell ÷ width of distribution cell

   B = _____ ft^2 (Distribution cell area required) ÷ ____ ft(A)

   B = _____ft

   c. Check Distribution Cell Length (B)

   For linear loading rate:

   Linear Loading Rate ≤ Design Wastewater Flow ÷ Cell length (B) or effective cell length for a concave mound)

   Linear Loading Rate ≤ _____ gal/day ÷ _____ feet

   Linear Loading Rate ≤ _____ gal/ft/day

Linear loading rate for systems with in situ soils having a soil application rate of ≤ 0.3 gal/ft^2/day within 12 inches of fill must be less than or equal to 4.5 gal/ft/day.

Is the linear loading rate ≤ what is allowed? ___ yes ___ no If no, then the length and width of the distribution cell must be changed so it does.

Distribution cell length (B) = Design Wastewater Flow ÷ Maximum Linear Loading Rate

Distribution cell length (B) = _____ gal/day ÷ _____ gal/ft/day

Distribution cell length (B) = _____ ft

Distribution cell total width (A) = _____ ft^2 (Distribution cell area) ÷ _____ ft(B)

Distribution cell total width (A) = _____ ft

d. Check percent of deflection and actual length of concave distribution cell length

Percent of deflection = Deflection ÷ Effective distribution cell length x 100

Percent of deflection = _____ ft ÷ _____ ft x 100

Percent of deflection = _____ % (≤ 10%)

Actual distribution cell length = [(% of deflection x 0.00265) + 1] x effective distribution cell length

Actual distribution cell length = [(__ % x 0.00265) +1] x _____ ft

Actual distribution cell length = _____ ft

D. DESIGN OF ENTIRE MOUND AREA

1. Fill Depth

a. Fill depth below distribution cell At least 6 inches, but not greater than 36 inches if the in situ soil beneath the tilled area is a soil listed in Table 383.44-3, Wis. Adm. Code, that requires a minimum depth of 36 inches or less. At least 12 inches, but not greater than 36 inches if the in situ soil beneath the tilled area is a soil listed in Table 383.44-3, Wis. Adm. Code, that requires a depth greater than 36 inches.

1) Depth at up slope edge of distribution cell (D) = distance required by Table 383.44-3, Wis. Adm. Code, minus distance in inches to limiting factor

D = _____ inches - ____ inches

D =_____ inches (at least ≥ 6 or 12 inches, but not greater then 36 inches in accordance with Table 2)

2) Depth at down slope edge of distribution cell (E)

E = Depth at up slope edge of distribution cell (D) + (% natural slope expressed as a decimal x distribution cell width (A))

E = D + (% natural slope expressed as decimal x A)

E = ____inches + (_____x_____feet x 12 inches/ft)

E = _____inches

b. Distribution cell Depth for Stone Aggregate Distribution cell.

Distribution cell depth (F) for stone aggregate distribution cell = amount of stone aggregate below distribution laterals (6 inches min.) + nominal pipe size of largest lateral + amount of stone aggregate over distribution laterals (2 inches min.).

F = ____(≥6) inches + _____inches + ____(≥2) inches

F = _____ inches

c. Distribution cell depth (F) for distribution cell with leaching chambers = total height of leaching chamber.

F = _____ inches

d. Cover material

1) Depth at center of distribution cell area (H) ≥ 12 inches

2) Depth at outer edges of distribution cell area (G) ≥ 6 inches

2. Mound length

a. End slope width (K)= Total fill at center of distribution cell x horizontal gradient of side slope

K = {([(D + E) ÷ 2] + F + H) x horizontal gradient of side slope} ÷ 12 inches/foot

K = {([(____inches + _____ inches) ÷ 2] + _____inches + ____inches) x ___ } ÷ 12 inches/ft

K = _____ft

b. Mound length (L) = Distribution cell length + (2 x end slope width)

L = B + 2K

L = _____ft + (2 x ____ft)

L = _____ feet

3. Mound width

a. Up slope width (J) = Fill depth at up slope edge of distribution cell (D + F + G) x Horizontal gradient of side slope x Slope correction factor {100 ÷ [100 + (gradient of side slope x % of slope) or (value from Table 5)]}

J = (D + F + G) x horizontal gradient of side slope x slope correction factor 100 ÷ [100 + (gradient of side slope x % of slope) or (value from Table 5)]

J = (_____ in + _____ in + _____ in) ÷ 12 in/ft x __ x 100 ÷ [100 + (___ x _____)] or [____]

J = _____ feet

b. Down slope width (I) = Fill depth at down slope edge of distribution cell (E + F + G) x Horizontal gradient of side slope x Down slope correction factor {100 ÷ [100 - (gradient of side slope x % of slope) or (value from Table 5)]}

I = (E + F + G) x Horizontal gradient of side slope x Down slope correction factor {100 ÷ [100 - (gradient of side slope x % of slope) or (value from Table 5)]}

I = (in + in + in) ÷ 12 in/ft x x 100 ÷ [100 - (x)] or [ ]

I = _____ in ÷ 12 in/ft x 3 x 100 ÷ _____

I = _____feet

c. Mound width (W) = Up slope width (J) + Distribution cell width (A) + Down slope width (I)

W = J + A + I

W = _____ ft + _____ ft + _____ ft

W = _____ feet

4. Check the basal area

a. Basal area required = Daily wastewater flow ÷ soil application rate of in situ soil (The soil application rate may be that which is listed for BOD_5 and TSS > or ≤ 30 mg/L depending on wastewater characteristics or fill depth below distribution cell. See Table 1.)

= _____ gal/day ÷ _____ gal/ft^2/day

= _____ ft^2

b. Basal area available

1) Sloping site = Cell length (B) x [(# of cells x cell width) + ({# of cells – 1} x cell spacing) + down slope width] (A+I)

= _____ ft x [(__ x __ ft) + ({ __ -1} x __ft) + __ ft]

= _____ ft x (_____ ft + _____ ft + _____ ft)

= _____ ft x _____ ft

= _____ ft^2

2) Level site = Cell length (B) x total mound width (W)

= _____ft x ____ ft

= _____ ft^2

c. Is available basal area sufficient? ___ yes _____ no

Basal area required ≤ Basal area available

_____ ft^2 ≤ _____ ft^2

See d. for recalculation of basal area

d. Basal area available (recalculation of basal area)

1) Sloping site = Cell length (B) x [(# of cells x cell width) + ({# of cells – 1} x cell spacing) + down slope width] (A+I)

= _____ ft x [(__ x __ ft) + ({ __ -1} x __ft) + __ ft]

= _____ ft x (_____ ft + ____ ft + _____ ft)

= _____ ft x _____ ft

= _____ ft^2

2) Level site = Cell length (B) x total mound width (W)

= _____ft x ____ ft

= _____ ft^2

5. Determine the location of observation pipes along the length of distribution cell.

Observation pipes will be installed in each distribution cell so as to be representative of a cell's hydraulic performance.

- be located such that there are a minimum of two installed in each dispersal cell at opposite ends from one another
- be located near the dispersal cell ends
- be at least 6 inches from the end wall and sidewall
- be installed at an elevation to view the horizontal or level infiltrative surface within the dispersal cell

Observation pipes may be located less than 6 inches from end walls or side walls if specified in state–approved manufacturers' installation instructions.

XI. EXAMPLE WORKSHEET

A. SITE CONDITIONS

Evaluate the site and soils report for the following:

- Surface water movement.
- Measure elevations and distances on the site so that slope, contours and available areas can be determined.
- Description of several soil profiles where the component will be located.
- Determine the limiting conditions such as bedrock, high groundwater level, soil permeability, and setbacks.

Slope - 6 %

Occupancy – One or Two-Family Dwelling - 3 (# of bedrooms)

Public Facility - 0 gal/day (Estimated wastewater flow)

Depth to limiting factor - 25 inches

Minimum depth of unsaturated soil required by Table 383.44-3, Wis. Adm. Code - 36 inches

In situ soil application rate used - 0.3 gal/ft^2/day

FOG value of effluent applied to component - < 30 mg/L

BOD_5 value of effluent applied to component - 180 mg/L

TSS value of effluent applied to component - 50 mg/L

Fecal Coliform monthly geometric mean value of effluent applied to component > 10^4 cfu/100ml X Yes __ No

Type of distribution cell - X Stone aggregate or __ Leaching chamber

B. DESIGN WASTEWATER FLOW (DWF)

One or Two-family Dwelling.

Combined wastewater flow:

DWF = 150 gal/day/bedroom x # of bedrooms

= 150 gal/day/bedroom x 3 # of bedrooms

= 450 gal/day

Clearwater and graywater only:

DWF = 90 gal/day/bedroom x # of bedrooms

= 90 gal/day/bedroom x _____# of bedrooms

= _____ gal/day

Blackwater only:

DWF = 60 gal/day/bedroom x # of bedrooms

= 60 gal/day/bedroom x _____# of bedrooms

= _____ gal/day

Public Facilities.

DWF = Estimated wastewater flow x 1.5

= _____ gal/day x 1.5

= _____ gal/day

C. DESIGN OF THE DISTRIBUTION CELL

1. Total size the Distribution cell(s) area

   a. Loading rate of fill material = _X_ ≤ 1.0 gal/ft^2/day if BOD_5 or TSS > 30 mg/L or
   ___≤ 2.0 gal/ft^2/day if BOD_5 or TSS ≤ 30 mg/L

   b. Bottom area of distribution cell = Design wastewater flow ÷ loading rate of fill material a determined in C.1.a.

   Distribution cell area = _450_ gal/day ÷ _1.0_ gal/ft^2/day

   Distribution cell area = _450_ ft^2

2. Distribution cell Configuration

   a. Distribution cell width(s) (A) = _7_ feet (≤ 10 ft.) and the number of distribution cells = _1_cells

   b. Distribution cell length (B) = Bottom area of distribution cell ÷ width of distribution cell

   B = _450_ ft^2 (Distribution cell area required) ÷ _7_ft(A)

   B = _64.29_ or _65_ ft

   c. Check distribution cell length (B)

   For linear loading rate:

   Linear Loading Rate ≤ Design Wastewater Flow ÷ Cell length (B) or effective cell length for a concave mound)

   Linear Loading Rate ≤ _450_ gal/day ÷ _65_ ft

   Linear Loading Rate ≤ _6.92_ gal/ft

   Linear loading rate for systems with in situ soils having an soil application rate of ≤ 0.3 gal./ft^2/day within 12 inches of fill must be less ≤ 4.5 gal/ft/day.

Is the linear loading rate ≤ what is allowed? ___ yes __x__ no If no, then the length and/or width of the distribution cell must be changed so it does.

Distribution cell length (B) = Design Wastewater Flow ÷ Maximum Linear Loading Rate

Distribution cell length (B) = __450__ gal/day ÷ __4.5__ gal/ft/day

Distribution cell length (B) = __100__ ft

Distribution cell width (A) = __450__ ft^2 (Distribution cell area) ÷ __100__ ft(B)

Distribution cell width (A) = __4.5__ ft^2

d. Check percent of deflection and actual length of concave distribution cell length

Percent of deflection = Deflection ÷ Effective distribution cell length x 100

Percent of deflection = _____ ft ÷ _____ ft x 100

Percent of deflection = _____ % (≤ 10%)

Actual distribution cell length = [(% of deflection x 0.00265) + 1] x effective distribution cell length

Actual distribution cell length = [(__ % x 0.00265) +1] x _____ ft

Actual distribution cell length = _____ ft

D. DESIGN OF ENTIRE MOUND AREA

1. Fill Depth

a. Minimum fill depth below distribution cell At least 6 inches, but not greater than 36 inches if the in situ soil beneath the tilled area is a soil listed in Table 383.44-3, Wis. Adm. Code, that requires a minimum depth of 36 inches or less. At least 12 inches, but not greater than 36 inches if the in situ soil beneath the tilled area is a soil listed in Table 383.44-3, Wis. Adm. Code, that requires a depth greater than 36 inches.

1) Depth at up slope edge of distribution cell (D) = distance required by Table 383.44-3, Wis. Adm. Code, minus distance in inches to limiting factor

D = __36__ inches - __25__ inches

D = __11__ inches (at least ≥ 6 or 12 inches, but not greater than 36 inches in accordance with Table 2)

2) Depth at down slope edge of distribution cell (E)

E = Depth at up slope edge of distribution cell (D) + (% natural slope expressed as a decimal x distribution cell width (A))

E = D + (% natural slope expressed as decimal x A)

E = 11 inches + (0.06 x 4.5 feet x 12 inches/ft)

E = 14.24 or 14.25 inches

b. Distribution cell Depth for Stone Aggregate Distribution cell.

Distribution cell depth (F) for stone aggregate distribution cell = amount of stone aggregate below distribution laterals (6 inches min.) + nominal outside diameter of largest lateral + amount of stone aggregate over distribution laterals (2 inches min.).

F = 6 (≥6) inches + 1.5 inches + 2 (≥2) inches

F = 9.5 inches

c. Distribution cell depth (F) for distribution cell with leaching chambers = total height of leaching chamber.

F = _____ inches

d. Cover material

1) Depth at distribution cell center (H) ≥ 12 inches

2) Depth at distribution cell edges (G) ≥ 6 inches

2. Mound length

a. End slope width (K)= Total fill at center of distribution cell x horizontal gradient of side slope

K = {([(D + E) ÷ 2] + F + H) x horizontal gradient of side slope} ÷ 12 inches/foot

K = {([(11 inches + 14.25 inches) ÷ 2] + 9.5 inches + 12 inches) x 3 } ÷ 12 inches/ft

K = 8.53 or 8.5 ft

b. Mound length (L) = Distribution cell length + (2 x end slope width)

L = B + 2K

L = 100 ft + (2 x 8.5 ft)

L = 117 feet

3. Mound width

a. Up slope width (J) = Fill depth at up slope edge of distribution cell (D + F + G) x Horizontal gradient of side slope x Slope correction factor {100 ÷ [100 + (gradient of side slope x % of slope or value from Table 5)]}

J = (D + F + G) x horizontal gradient of side slope x Slope correction factor 100 ÷ [100 + (gradient of side slope x % of slope or value from Table 5)]}

J = (11 in + 9.5 in + 6 in) ÷ 12 in/ft x 3 x 100 ÷ [100 + (3 x 6)] or [ ]

J = 5.61 or 5.6 feet

b. Down slope width (I) = Fill depth at down slope edge of distribution cell (E + F + G) x Horizontal gradient of side slope x Down slope correction factor {100 ÷ [100 - (gradient of side slope x % of slope or value from Table 5)]}

I = (E + F + G) x Horizontal gradient of side slope x Down slope correction factor {100 ÷ [100 - (gradient of side slope x % of slope or value from Table 5)]}

I = (14.25 in + 9.5 in + 6 in) ÷ 12 in/ft x 3 x 100 ÷ [100 - (3 x 6)]

I = 29.75 in ÷ 12 in/ft x 3 x 100 ÷ 82

I = 9.07 or 9.1 feet

c. Mound width (W) = Up slope width (J) + Distribution cell width (A) + Down slope width (I)

W = J + A + I

W = 5.6 ft + 4.5 ft + 9.1 ft

W = 19.2 feet

4. Check the basal area

a. Basal area required = Daily wastewater flow ÷ soil application rate of in situ soil (The soil application rate may be that which is listed for BOD_5 and TSS > or ≤ 30 mg/L depending on wastewater characteristics or fill depth below distribution cell. See Table 1.)

= 450 gal/day ÷ 0.3 gal/ft^2/day

= 1500 ft^2

b. Basal area available

1) Sloping site = Cell length (B) x [(# of cells x cell width) + ({# of cells – 1} x cell spacing) + down slope width] (A+I)

= 100 ft x [(1 x 4.5 ft) + ({ 1 -1} x 0 ft) + 9.5 ft]

= 100 ft x (4.5 ft + 0 ft + 9.5 ft)

= 100 ft x 14 ft

= 1400 ft^2

2) Level site = Cell length (B) x total mound width (W)

= _____ft x _____ ft

= _____ ft^2

c. Is available basal area sufficient? ___ yes __x__ no

Basal area required < Basal area available

1500 ft^2 ≤ 1400 ft^2

The available basal area must be increased by 100 ft^2. This can be accomplished by increasing the down slope width (I) by 1 ft. making it 10.5 ft.

See d. for recalculation of basal area.

d. Basal area available (recalculation of basal area)

1) Sloping site = Cell length (B) x [(# of cells x cell width) + ({# of cells – 1} x cell spacing) + down slope width] (A+I)

= 100 ft x [(1 x 4.5 ft) + ({ 1 -1} x 0 ft) + 10.5 ft]

= 100 ft x (4.5 ft + 0 ft + 10.5 ft)

= 10 ft x 15 ft

= 1500 ft^2

2) Level site = Cell length (B) x total mound width (W)

= _____ft x ____ ft

= _____ ft^2

5. Determine the location of observation pipes along the length of distribution cell.

Observation pipes will be installed in each distribution cell so as to be representative of a cell's hydraulic performance.

- **be located such that there are a minimum of two installed in each dispersal cell at opposite ends from one another**
- **be located near the dispersal cell ends**
- **be at least 6 inches from the end wall and sidewall**
- **be installed at an elevation to view the horizontal or level infiltrative surface within the dispersal cell**

Observation pipes may be located less than 6 inches from end walls or side walls if specified in state–approved manufacturers' installation instructions.

XII. PLAN SUBMITTAL AND INSTALLATION INSPECTION

A. Plan Submittal

In order to install a system correctly, it is important to develop plans that will be used to install the system correctly the first time. The following checklist may be used when preparing plans for review. The checklist is intended to be a **general guide**. Not all needed information may be included in this list. Some of the information may not be required to be submitted due to the design of the system. Conformance to the list is not a guarantee of plan approval. Additional information may be needed or requested to address unusual or unique characteristics of a particular project. Contact the reviewing agent for specific plan submittal requirements, which the agency may require that are different than the list included in this manual.

General Submittal Information

- Photocopies of soil report forms, plans, and other documents are acceptable. However, an original signature is required on certain documents.
- Submittal of additional information requested during plan review or questions concerning a specific plan must be referenced to the Plan Identification indicator assigned to that plan by the reviewing agency.
- Plans or documents must be permanent copies or originals.

Forms and Fees

- Application form for submittal, provided by reviewing agency along with proper fees set by reviewing agent.

Soils Information

- Complete Soils and Site Evaluation Report (form # SBD-8330) for each soil boring described; signed and dated by a certified soil tester, with license number.
- Separate sheet showing the location of all borings. The location of all borings and backhoe pits must be able to be identified on the plot plan.

Documentation

- Architects, engineers or designers must sign, seal and date each page of the submittal or provide an index page, which is signed, sealed and dated.
- Master Plumbers must sign, date and include their license number on each page of the submittal or provide an index page, which is signed, sealed and dated.
- Three completed sets of plans and specifications (clear, permanent and legible); submittals must be on paper measuring at least 8-1/2 by 11 inches.
- Designs that are based on department approved component manual(s) must include reference to the manual by name, publication number and published date.

Plot Plan

- Dimensioned plans or plans drawn to scale (scale indicated on plans) with parcel size or all property boundaries clearly marked.
- Slope directions and percent in system area.
- Bench mark and north arrow.
- Setbacks indicated as per appropriate code.
- Two-foot contours or other appropriate contour interval within the system area.
- Location information; legal description of parcel must be noted.
- Location of any nearby existing system or well.

Plan View

- Dimensions for distribution cell(s).
- Location of observation pipes.
- Dimensions of mound.
- Pipe lateral layout, which must include the number of laterals, pipe material, diameter and length; and number, location and size of orifices.
- Manifold and force main locations, with materials, length and diameter of each.

Cross Section of System

- Include tilling requirement, distribution cell details, percent slope, side slope, and cover material.
- Lateral elevation, position of observation pipes, dimensions of distribution cell, and type of cover material such as geotextile fabric, if applicable.

System Sizing

- For one and two-family dwellings, the number of bedrooms must be included.
- For public buildings, the sizing calculations must be included.

Tank And Pump or Siphon Information

- All construction details for site-constructed tanks.
- Size and manufacturer information for prefabricated tanks.
- Notation of pump or siphon model, pump performance curve, friction loss for force main and calculation for total dynamic head.
- Notation of high water alarm manufacturer and model number.
- Cross section of dose tank / chamber to include storage volumes; connections for piping, vents, and power; pump "off" setting; dosing cycle and volume, high water alarm setting, and storage volume above the highwater alarm; and location of vent and manhole.
- Cross section of two compartments tanks or tanks installed in a series must include information listed above.

B. Inspections

Inspection shall be made in accordance with ch. 145.20, Wis. Stats. and s. SPS 383.26, Wis. Adm. Code. The inspection form on the following two pages may be used. The inspection of the system installation and/or plans is to verify that the system at least conforms to specifications listed in Tables 1 - 3 of this manual.

POWTS INSPECTION REPORT
(ATTACH TO PERMIT)

GENERAL INFORMATION

Permit Holder's Name	☐ City ☐ Village ☐ Town of	County	Sanitary Permit No.
State Plan ID No.	Tax Parcel No.	Property Address if Available	

TREATMENT COMPONENT INFORMATION			SETBACKS (FT)				
TYPE	MANUFACTURER AND MODEL NUMBER	CAPACITY	P/L	WELL	WATER LINE	BLDG.	VENT
SEPTIC							
DOSING							
AERATION							
HOLDING							
FILTER							

PUMP / SIPHON INFORMATION

Manufacturer:	Model No.	Demand in GPM	TDH - Design

FORCE MAIN INFORMATION			FRICTION LOSS (FT)			
Length	Diameter	Dist. To Well	Component Head	Force Main Losses	Vert. Lift	TDH - As Built

SOIL ABSORPTION COMPONENT

TYPE OF COMPONENT:			COVER MATERIAL:			
Cell Width	Cell Length	Cell Depth	Cell Spacing	No. of Cells		
LEACHING CHAMBER OR UNIT	Manufacturer				Model No.	
SETBACK INFO. (FT)	Property Line	Bldg.	Well		Water Line	OHWM

DISTRIBUTION COMPONENT

Elevation data on back of form

Header / Manifold		Distribution Lateral(s)			Orifice size	Orifice Spacing	Obs. Pipes Inst. & No.
Length	Dia.	Length	Dia.	Spacing			

SOIL COVER

Depth over center of cell:	Depth over edge of cell:	Depth of Cover material	Texture	Seeded / Sodded	Mulched

DEVIATIONS FROM APPROVED PLAN

DATE OF INST. DIRECTIVE:	DATE OF ENFORCEMENT ORDER:

DATE OF REFERRAL TO LEGAL COUNSEL:

COMMENTS (Persons present, discrepancies, etc.)

COMPONENTS NOT INSPECTED

Plan Revision Required ☐ Yes ☐ No	Date:	Signature of Inspector:	Cert. Number

Sketch on other side

ELEVATION DATA

Point	Back sight	Height of instrument	Foresight	Elevation	Comments
Bench mark					
Bldg. Sewer					
Tank inlet					
Tank outlet					
Tank inlet					
Tank outlet					
Dose tank inlet					
Bottom of dose tank					
Dist. lateral 1					
System elev. 1					
Dist. lateral 2					
System elev. 2					
Dist. lateral 3					
System elev. 3					
Grade elev. 1					
Grade elev. 2					
Grade elev. 3					

SKETCH OF COMPONENT & ADDITIONAL COMMENTS