StormTech®

Detention • Retention • Water Quality

Subsurface Stormwater Management℠

MC-4500 Chamber

StormTech™ MC-4500 Chamber

Designed to meet the most stringent industry performance standards for superior structural integrity while providing designers with a cost-effective method to save valuable land and protect water resources. The StormTech system is designed primarily to be used under parking lots thus maximizing land usage for commercial and municipal applications.

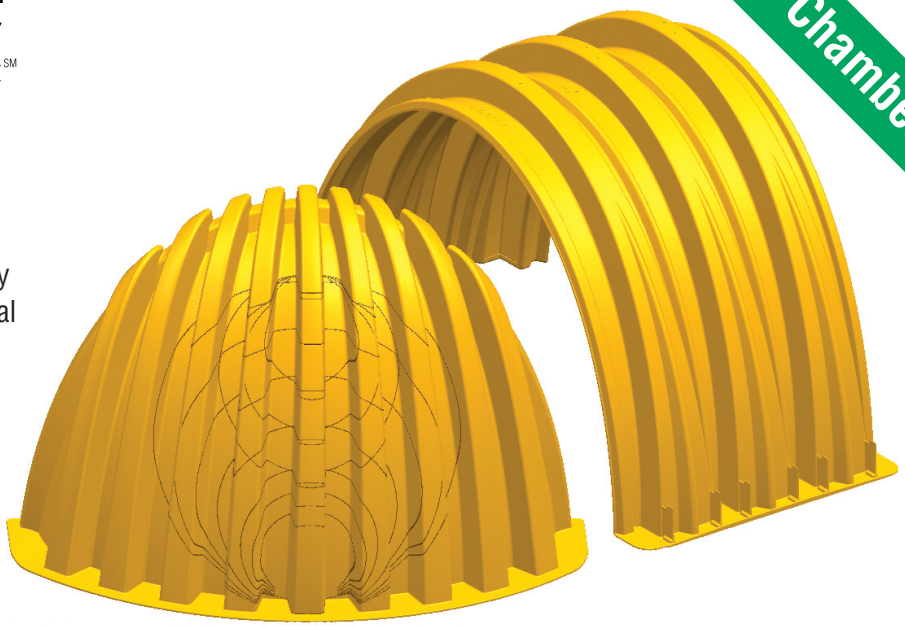

StormTech MC-4500 Chamber (not to scale)

Nominal Chamber Specifications

Size (L x W x H)	52" (1321 mm) x 100" (2540 mm) x 60" (1524 mm)
Chamber Storage	106.5 ft^3 (3.01 m^3)
Min. Installed Storage*	162.6 ft^3 (4.60 m^3)
Nominal Weight	120 lbs (54.4 kg)

* This assumes a minimum of 12" (305 mm) of stone above, 9" (229 mm) of stone below chambers, 9" (229 mm) of stone between chambers/end caps and 40% stone porosity.

StormTech MC-4500 End Cap (not to scale)

Nominal End Cap Specifications

Size (L x W x H)	35.1" (891 mm) x 90.2" (2291 mm) x 59.4" (1509 mm)
End Cap Storage	35.7 ft^3 (1.01 m^3)
Min. Installed Storage*	108.7 ft^3 (3.08 m^3)
Nominal Weight	120 lbs (54.4 kg)

*This assumes a minimum of 12" (305 mm) of stone above, 9" (229 mm) of stone below, 12" (305 mm) of stone perimeter, 9" (229 mm) of stone between chambers/end caps and 40% stone porosity.

Shipping

8 chambers/pallet

11 pallets/truck

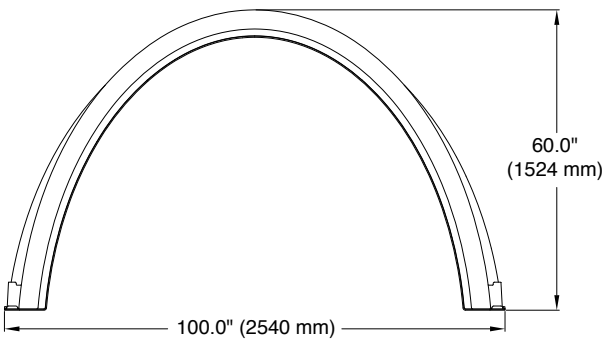

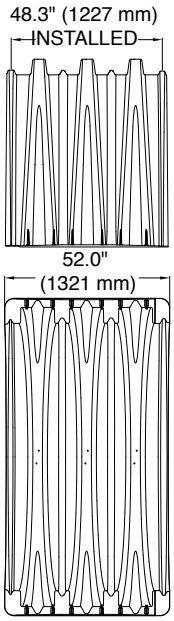

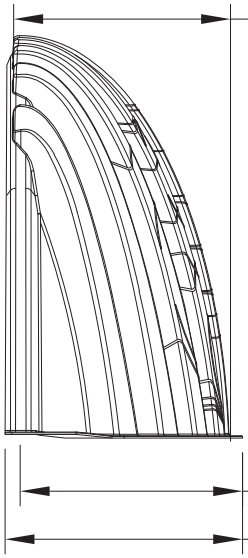

30.7"
(781 mm)
INSTALLED

32.8" (832 mm)

35.1" (891 mm)

Storage Volume Per Chamber/End Cap ft³ (m³)

	Bare Unit Storage ft³ (m³)	Chamber/End Cap and Stone Volume — Stone Foundation Depth in. (mm)			
		9" (229 mm)	12" (305 mm)	15" (381 mm)	18" (457 mm)
Chamber	106.5 (3.02)	162.6 (4.60)	166.3 (4.71)	169.9 (4.81)	173.6 (4.91)
End Cap	35.7 (1.01)	108.7 (3.08)	111.9 (3.17)	115.2 (3.26)	118.4 (3.35)

NOTE: Assumes 9" (229 mm) min. row spacing, 12" (305 mm) min. of stone above, 40% stone porosity and includes the bare chamber/end cap volume. End cap volume assumes 12" (305 mm) min. stone perimeter.

Volume of Excavation Per Chamber/End Cap in yd³ (m³)

	Stone Foundation Depth			
	9" (229 mm)	12" (305 mm)	15" (381 mm)	18" (457 mm)
Chamber	10.5 (8.0)	10.8 (8.3)	11.2 (8.5)	11.5 (8.8)
End Cap	9.3 (7.1)	9.6 (7.3)	9.9 (7.6)	10.2 (7.8)

NOTE: Assumes 9" (229 mm) min. of separation between chamber rows, 12" (305 mm) min. of perimeter in front of end caps, and 24" (610 mm) of cover. The volume of excavation will vary as the depth of cover increases.

Amount of Stone Per Chamber

ENGLISH tons (yds³)	Stone Foundation Depth			
	9" (229 mm)	12" (305 mm)	15" (381 mm)	18" (457 mm)
Chamber	7.4 (5.2)	7.8 (5.5)	8.3 (5.9)	8.8 (6.2)
End Cap	9.6 (6.8)	10.0 (7.1)	10.4 (7.4)	10.9 (7.7)
METRIC kg (m³)	**229 mm**	**305 mm**	**381 mm**	**457 mm**
Chamber	6681 (4.0)	7117 (4.2)	7552 (4.5)	7987 (4.7)
End Cap	8691 (5.2)	9075 (5.4)	9460 (5.6)	9845 (5.9)

NOTE: Assumes 12" (305 mm) of stone above, 9" (229 mm) min. row spacing, and 12" (305 mm) min. of perimeter stone in front of end caps.

General Cross Section

**Contact your local StormTech representative or visit www.stormtech.com for a copy of the latest installation instructions.

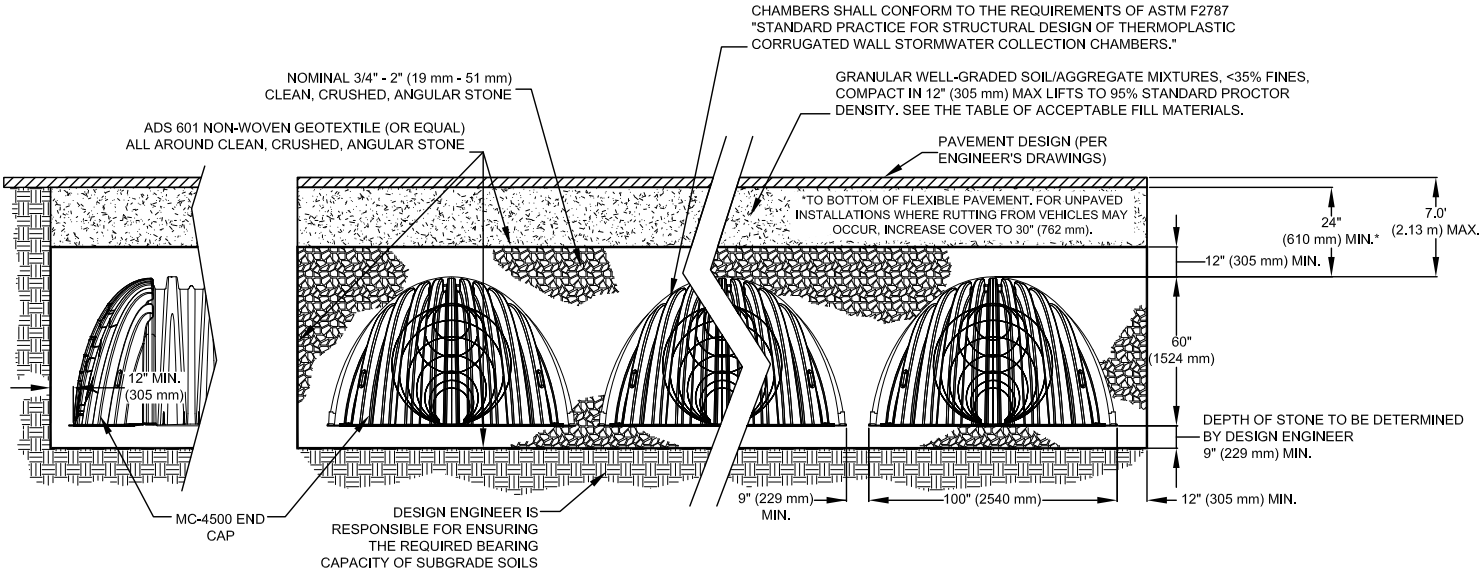

THE INSTALLED CHAMBER SYSTEM SHALL PROVIDE THE LOAD FACTORS SPECIFIED IN THE AASHTO LRFD BRIDGE DESIGN SPECIFICATIONS SECTION 12.12 FOR EARTH AND LIVE LOADS, WITH CONSIDERATION FOR IMPACT AND MULTIPLE VEHICLE PRESENCES.

StormTech®

Detention • Retention • Water Quality

Division of ADS

20 Beaver Road, Suite 104 | Wethersfield | Connecticut | 06109

860.529.8188 | 888.892.2694 | fax 866.328.8401 | fax 860-529-8040 | www.stormtech.com

*Advanced Drainage Systems, the ADS logo, the green stripe, are registered trademarks of Advanced Drainage Systems.
StormTech and MC-4500 are registered trademarks of StormTech, Inc.
Green Building Council Member logo is a registered trademark of the U.S. Green Building Council.
ADS "Terms and Conditions of Sale" are available on the ADS website, www.ads-pipe.com

MADE IN THE U.S.A.

© 2010. StormTech, Inc.

Printed in the U.S.A. on recycled paper