StormTech®

Detention • Retention • Water Quality

Subsurface Stormwater Management℠

MC-3500 / MC-4500

MC-3500 and MC-4500 Design Manual

StormTech® Chamber Systems for Stormwater Management

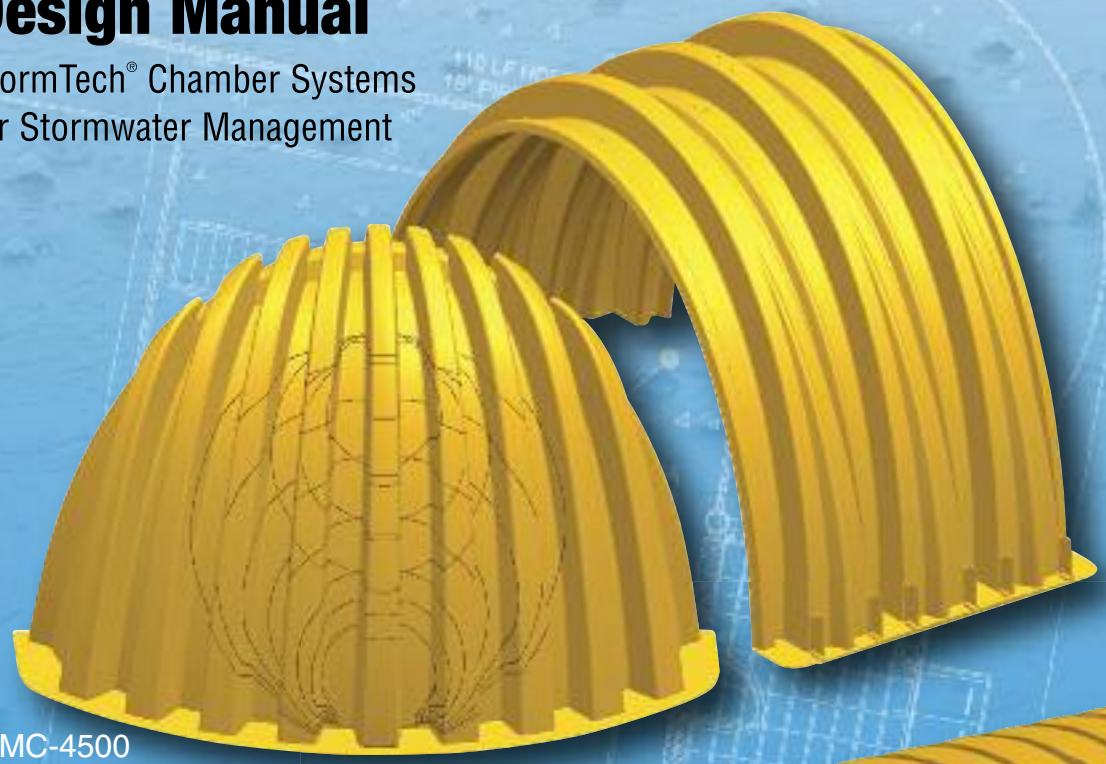

MC-4500

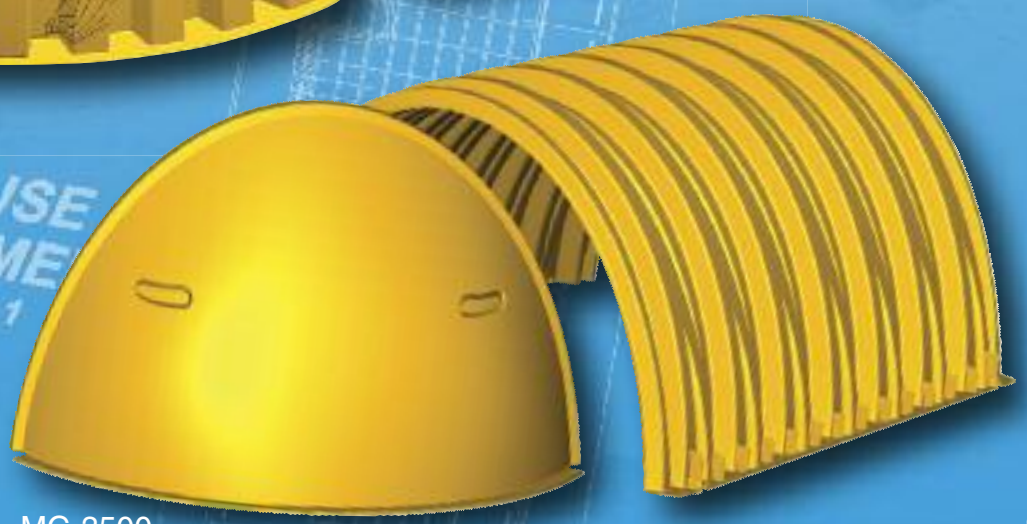

MC-3500

*For SC-310, SC-740 & DC-780 designs, please refer to the SC-310/SC-740/DC-780 Design Manual.

Table of Contents

1.0 Product Information 2

2.0 Foundations for Chambers 7

3.0 Required Materials/Row Separation 9

4.0 Hydraulics 11

5.0 Cumulative Storage Volume 13

6.0 System Sizing 17

7.0 Structural Cross Sections and Specifications 19

8.0 General Notes 21

9.0 Inspection and Maintenance 22

StormTech Technical Services Department assists design professionals in specifying StormTech stormwater systems. This assistance includes the layout of chambers to meet the engineer's volume requirements and the connections to and from the chambers. The Technical Department can also assist converting and cost engineering projects currently specified with ponds, pipe, concrete vaults and other manufactured stormwater detention/retention products. Please note that it is the responsibility of the design engineer to ensure that the chamber bed layout meets all design requirements and is in compliance with applicable laws and regulations governing a project.

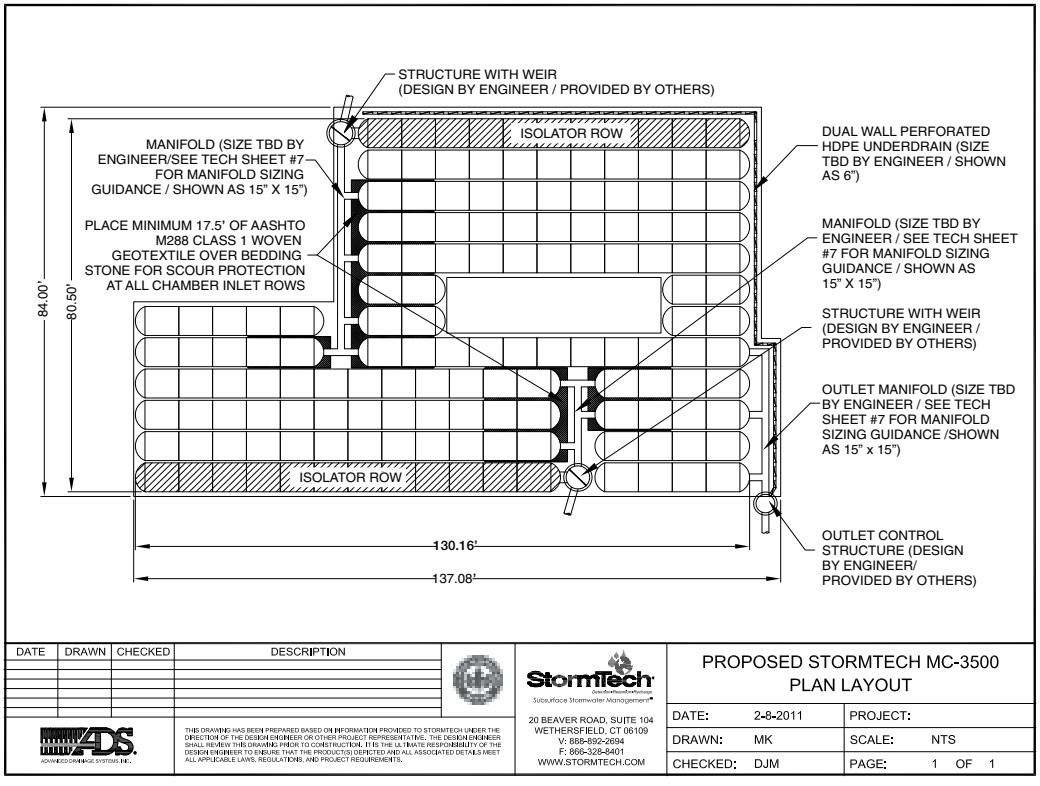

This manual is exclusively intended to assist engineers in the design of subsurface stormwater systems using StormTech chambers.

1.0 Product Information

FIGURE 1 – StormTech MC-3500 Chamber (not to scale)

Nominal Chamber Specifications

Size (L x W x H)	90" (2286 mm) x 77" (1956 mm) x 45" (1143 mm)
Chamber Storage	113.0 ft^3 (3.20 m^3)
Min. Installed Storage*	176.8 ft^3 (5.01 m^3)
Nominal Weight	124 lbs (56.2 kg)

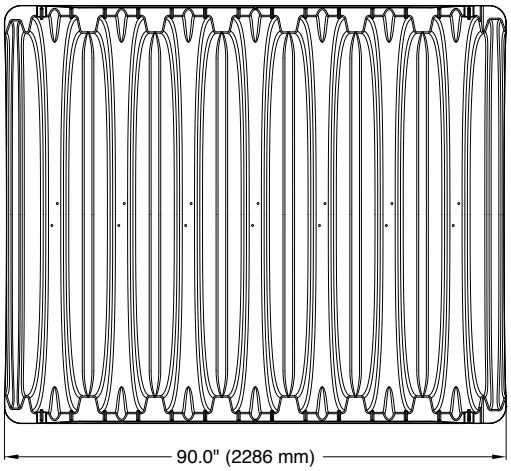

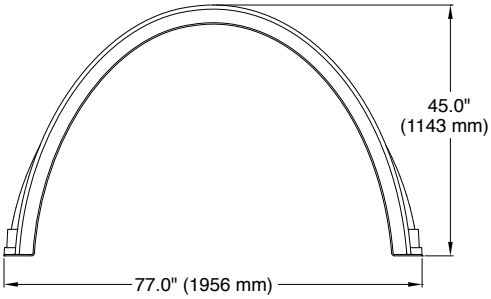

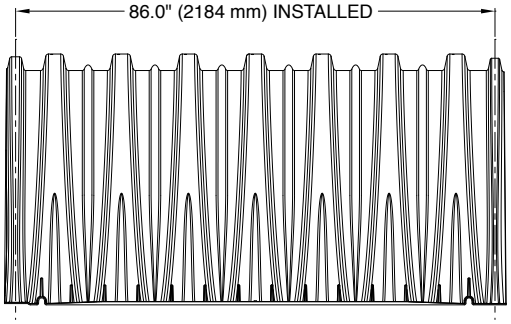

FIGURE 2 – StormTech MC-3500 End Cap (not to scale)

Nominal End Cap Specifications

Size (L x W x H)	26.5" (673 mm) x 71" (1803 mm) x 45.1" (1145 mm)
End Cap Storage	15.6 ft^3 (0.44 m^3)
Min. Installed Storage*	45.6 ft^3 (1.29 m^3)
Nominal Weight	43 lbs (19.5 kg)

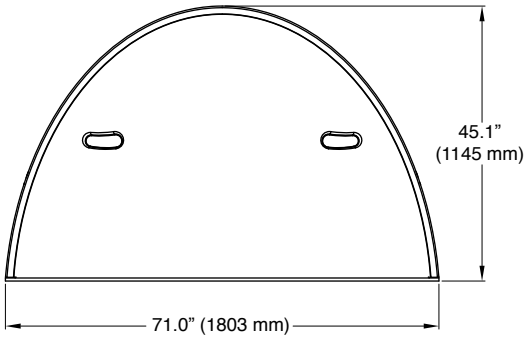

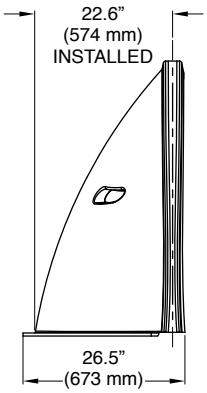

* This assumes a minimum of 12" (305 mm) of stone above, 9" (229 mm) of stone below and 6" (152 mm) of stone between the chambers/end caps and 40% stone porosity. The end cap minimum installed storage also includes the stone storage located in the 6" (152 mm) stone perimeter.

FIGURE 3 – StormTech MC-4500 Chamber (not to scale)

Nominal Chamber Specifications

Size (L x W x H)	52" (1321 mm) x 100" (2540 mm) x 60" (1524 mm)
Chamber Storage	106.5 ft^3 (3.01 m^3)
Min. Installed Storage*	162.6 ft^3 (4.60 m^3)
Nominal Weight	120 lbs (54.4 kg)

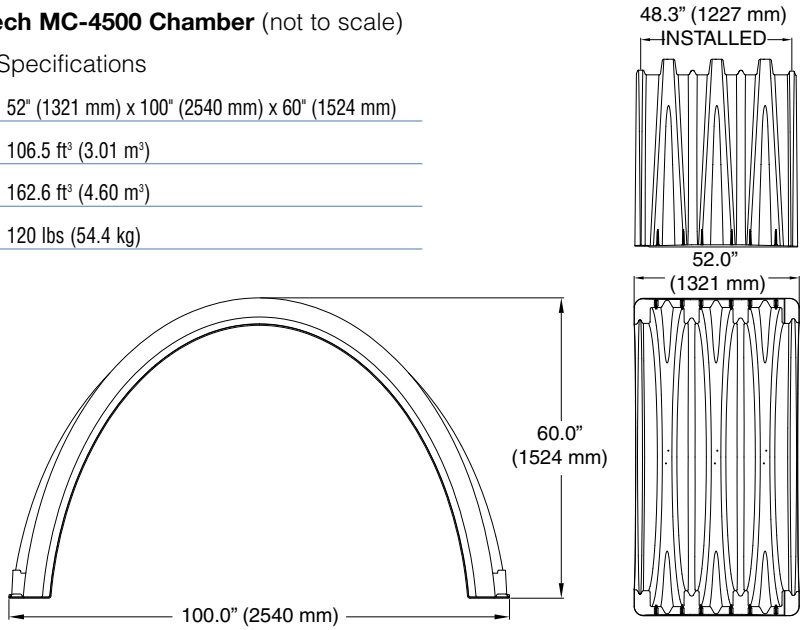

FIGURE 4 – StormTech MC-4500 End Cap (not to scale)

Nominal End Cap Specifications

Size (L x W x H)	35.1" (891 mm) x 90.2" (2291 mm) x 59.4" (1509 mm)
End Cap Storage	35.7 ft^3 (1.01 m^3)
Min. Installed Storage*	108.7 ft^3 (3.08 m^3)
Nominal Weight	120 lbs (54.4 kg)

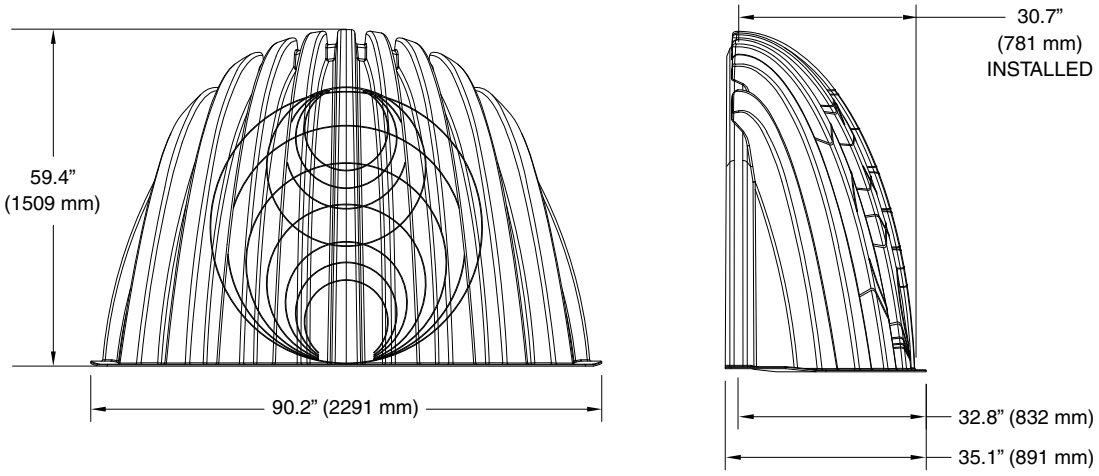

* This assumes a minimum of 12" (305 mm) of stone above, 9" (229 mm) of stone below and 9" (229 mm) of stone between the chambers/end caps and 40% stone porosity. The end cap minimum installed storage also includes the stone storage located in the 12" (305 mm) stone perimeter.

1.0 Product Information

1.1 PRODUCT DESIGN

StormTech's commitment to thorough product testing programs, materials evaluation and adherence to national standards has resulted in two more superior products. Like other StormTech products, the MC-3500 and MC-4500 are designed to meet the full scope of design requirements of Section 12.12 of the AASHTO LRFD Bridge Design Specifications. The design of the chambers is also in accordance with ASTM F 2787, "Standard Practice for Structural Design of Thermoplastic Corrugated Wall Collection Chambers," which gives detailed guidance on how to design chambers to meet the requirements of AASHTO.

While Section 12.12 of the AASHTO specification is applicable to corrugated chambers despite being intended for round pipe, there are certain chamber parameters that are not adequately addressed in the AASHTO methodology: 1) open-bottom geometry, 2) support on integral foot, 3) varying circumferential corrugation geometry, and 4) manufacture with alternative thermoplastic resin. Designing to the requirements of these standards provides both the assurance of product quality and safe structural design.

The design of larger chambers in the same tradition of our other chambers required the collaboration of experts in soil-structure interaction, plastics and manufacturing. Years of extensive research, including laboratory testing and field verification, were required to produce chambers that are ready to meet both the rigors of installation and the longevity expected by engineers and owners.

This Design Manual provides the details and specifications necessary for consulting engineers to design stormwater management systems using the MC-3500 and MC-4500 chamber. It provides specifications for storage capacities, layout dimensions as well as requirements for design to ensure a long service life. The basic design concepts for foundation and backfill materials, subgrade bearing capacities and row spacing remain equally as pertinent for the MC-3500 and MC-4500 as the SC-740, SC-310 and DC-780 chamber systems. However, since many design values and dimensional requirements are different for these larger chambers than the SC-740, SC-310 and DC-780 chambers, design manuals and installation instructions are not interchangeable.

This manual includes only those details, dimensions, cover limits, etc for the MC-3500 and MC-4500 and is intended to be a stand-alone design guide for the MC-3500 and MC-4500 chambers. Installation Instructions specifically for these two chamber models have also been published.

1.2 TECHNICAL SUPPORT

The StormTech Technical Services Department is available to assist the engineer with the layout of MC-3500 and MC-4500 chamber systems and answer questions regarding all the StormTech chamber models. Call the Technical Services Department, email us at techinfo@stormtech.com or contact your local StormTech representative.

1.3 MC-3500 AND MC-4500 CHAMBERS

All StormTech chambers are designed to the full scope of AASHTO requirements without repeating end walls or other structural reinforcing. StormTech's continuously curved, elliptical arch and the surrounding angular backfill are the key components of the structural system. With the addition of patent pending integral stiffening ribs **(Figure 5)**, the MC-3500 and MC-4500 are assured to provide a long, safe service life. Like other StormTech chambers, the MC-3500 and MC-4500 are produced from high quality, impact modified virgin polypropylene which is tested for short-term and long-term mechanical properties.

With all StormTech chambers, one chamber type is used for the start, middle and end of rows. Rows are formed by overlapping the *upper joint corrugation* of the next chamber over the *lower joint corrugation* of the previous chamber **(Figure 6)**.

1.4 CHAMBER JOINTS

All StormTech chambers are designed with an optimized joining system. The height and width of the end corrugations have been designed to provide the required structural safety factors while providing an unobstructed flow path down each row.

To assist the contractor, StormTech chambers are molded with simple assembly instructions and arrows that indicate the direction in which to build rows. The corrugation valley immediately adjacent to the lower joint corrugation is marked “Overlap Here - Lower Joint.” The corrugation valley immediately adjacent to the upper joint corrugation is marked “Build This Direction - Upper Joint.”

Two people can safely and efficiently carry and place chambers without cumbersome connectors, special tools or heavy equipment. Each row of chambers must begin and end with a joint corrugation. Since joint corrugations are of a different size than the corrugations along the body of the chamber, chambers cannot be field cut and installed. Only whole MC-3500 and MC-4500 chambers can be used. For system layout assistance contact StormTech.

1.5 MC-3500 AND MC-4500 END CAPS

The MC-3500 and MC-4500 end caps are easy to install. These end caps are designed with a corrugation joint that fits over the top of either end of the chamber. The end cap joint is simply set over the top of either of the upper or lower chamber joint corrugations **(Figure 7)**. Three (3) screws fasten the end cap to the chamber to maintain a positive connection during backfilling.

1.6 MC-3500 END CAPS

Handles are molded into the MC-3500 end cap to enable one person to carry and set the end cap in place. MC-3500 end caps are available pre-cored for a variety of pipe sizes at predetermined inverts. See StormTech details. Custom invert pre-cored end caps are also available.

FIGURE 5 – Chamber and End Cap Components

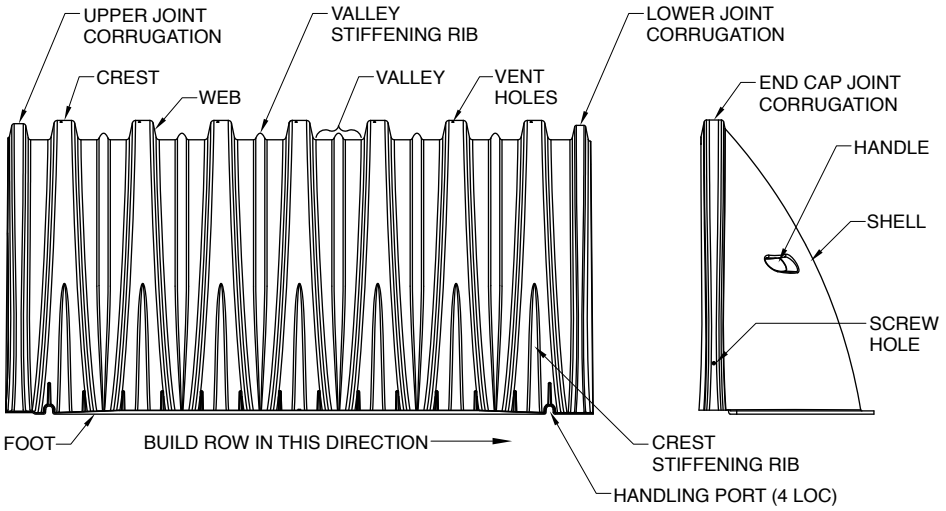

FIGURE 6 – Chamber Joint Overlap

FIGURE 7 – End Cap Joint Overlap

1.7 MC-4500 END CAPS

The MC-4500 end cap has pipe cutting guides for 12"– 42" (300 mm – 1050 mm) bottom inverts and 12" – 24" (300 mm – 600 mm) top inverts. Custom pre-cored invert locations are also available.

FIGURE 8 – MC-4500 End Cap Inverts

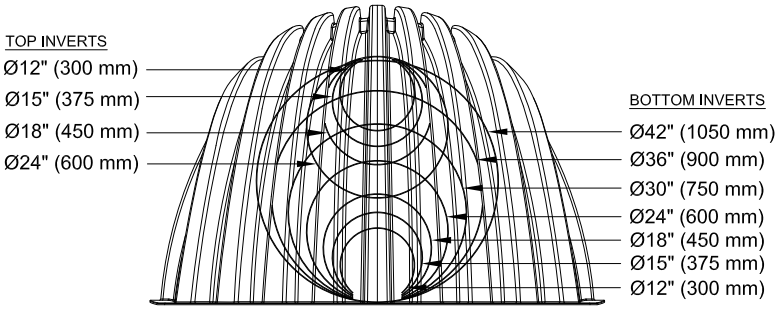

FIGURE 9 – MC-4500 Chamber and End Cap Components

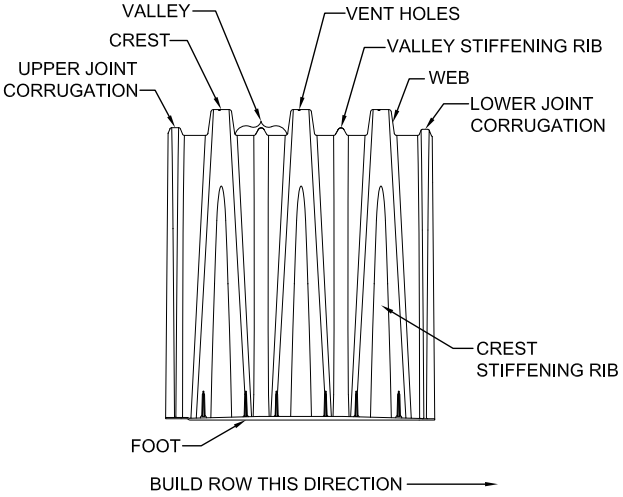

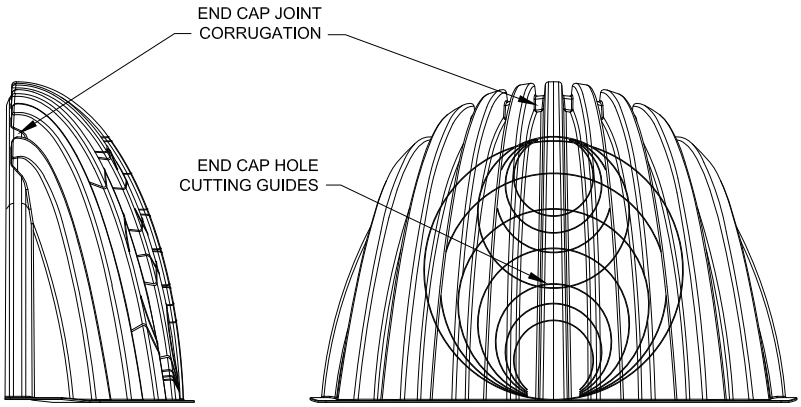

2.0 Foundations for Chambers

2.1 FOUNDATION REQUIREMENTS

StormTech chamber systems can be installed in various soil types. The subgrade bearing capacity and the cover height over the chambers determine the required depth of clean, crushed, angular foundation stone below the chambers. Foundation stone, also called bedding, is the stone between the subgrade soils and the feet of the chamber. Flexible structures are designed to transfer a significant portion of both live and dead loads through the surrounding soils. Chamber systems accomplish this by creating load paths through the columns of embedment stone between and around the rows of chambers. This creates load concentrations at the base of the columns between the rows. The foundation stone spreads out the concentrated loads to distributed loads that can be supported by the subgrade soils.

Since increasing the cover height (top of chamber to finished grade) causes increasing soil load, a greater depth of foundation stone is necessary to distribute the load to the subgrade soils. **Table 1** and **2** specify the minimum required foundation depths for varying cover heights and allowable subgrade bearing capacities. These tables are based on StormTech service loads. The minimum required foundation depth is 9" (229 mm) for both chambers.

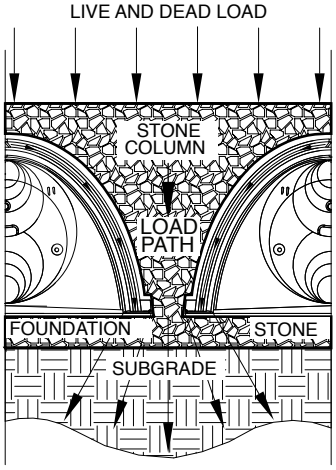

2.2 WEAKER SOILS

StormTech has not provided guidance for subgrade bearing capacities less than 2000 pounds per square foot [(2.0 ksf) (96 kPa)]. These soils are often highly variable, may contain organic materials and could be more sensitive to moisture. A geotechnical engineer must be consulted if soils with bearing capacities less than 2000 psf (96 kPa) are present.

TABLE 1 – MC-3500 Minimum Required Foundation Depth in inches (millimeters)
Assumes 6" (152 mm) row spacing.

Cover Hgt. ft. (m)	Minimum Bearing Resistance for Service Loads ksf (kPa)																								
	4.4 (211)	4.3 (206)	4.2 (201)	4.1 (196)	4.0 (192)	3.9 (187)	3.8 (182)	3.7 (177)	3.6 (172)	3.5 (168)	3.4 (163)	3.3 (158)	3.2 (153)	3.1 (148)	3.0 (144)	2.9 (139)	2.8 (134)	2.7 (129)	2.6 (124)	2.5 (120)	2.4 (115)	2.3 (110)	2.2 (105)	2.1 (101)	2.0 (96)
2.0 (0.61)	9 (229)	9 (229)	9 (229)	9 (229)	9 (229)	9 (229)	9 (229)	9 (229)	9 (229)	9 (229)	9 (229)	9 (229)	9 (229)	9 (229)	9 (229)	12 (305)	12 (305)	12 (305)	12 (305)	15 (381)	15 (381)	15 (381)	18 (457)	18 (457)	24 (610)
2.5 (0.76)	9 (229)	9 (229)	9 (229)	9 (229)	9 (229)	9 (229)	9 (229)	9 (229)	9 (229)	9 (229)	9 (229)	9 (229)	9 (229)	9 (229)	12 (305)	12 (305)	12 (305)	12 (305)	15 (381)	15 (381)	15 (381)	18 (457)	18 (457)	24 (610)	24 (610)
3.0 (0.91)	9 (229)	9 (229)	9 (229)	9 (229)	9 (229)	9 (229)	9 (229)	9 (229)	9 (229)	9 (229)	9 (229)	9 (229)	12 (305)	12 (305)	12 (305)	12 (305)	15 (381)	15 (381)	15 (381)	18 (457)	18 (457)	18 (457)	24 (610)	24 (610)	24 (610)
3.5 (1.07)	9 (229)	9 (229)	9 (229)	9 (229)	9 (229)	9 (229)	9 (229)	9 (229)	9 (229)	9 (229)	12 (305)	12 (305)	12 (305)	12 (305)	12 (305)	15 (381)	15 (381)	15 (381)	18 (457)	18 (457)	24 (610)	24 (610)	24 (610)	24 (610)	30 (762)
4.0 (1.22)	9 (229)	9 (229)	9 (229)	9 (229)	9 (229)	9 (229)	9 (229)	9 (229)	12 (305)	12 (305)	12 (305)	12 (305)	12 (305)	15 (381)	15 (381)	15 (381)	18 (457)	18 (457)	18 (457)	24 (610)	24 (610)	24 (610)	24 (610)	30 (762)	30 (762)
4.5 (1.37)	9 (229)	9 (229)	9 (229)	9 (229)	9 (229)	9 (229)	9 (229)	12 (305)	12 (305)	12 (305)	12 (305)	15 (381)	15 (381)	15 (381)	15 (381)	18 (457)	18 (457)	18 (457)	24 (610)	24 (610)	24 (610)	24 (610)	30 (762)	30 (762)	36 (914)
5.0 (1.52)	9 (229)	9 (229)	9 (229)	9 (229)	9 (229)	12 (305)	12 (305)	12 (305)	12 (305)	12 (305)	15 (381)	15 (381)	15 (381)	18 (457)	18 (457)	18 (457)	18 (457)	18 (457)	24 (610)	24 (610)	24 (610)	30 (762)	30 (762)	36 (914)	36 (914)
5.5 (1.68)	9 (229)	9 (229)	9 (229)	12 (305)	12 (305)	12 (305)	12 (305)	12 (305)	15 (381)	15 (381)	15 (381)	15 (381)	18 (457)	18 (457)	18 (457)	24 (610)	24 (610)	24 (610)	24 (610)	24 (610)	30 (762)	30 (762)	36 (914)	36 (914)	42 (1067)
6.0 (1.83)	9 (229)	9 (229)	12 (305)	12 (305)	12 (305)	12 (305)	15 (381)	15 (381)	15 (381)	15 (381)	18 (457)	18 (457)	18 (457)	18 (457)	24 (610)	24 (610)	24 (610)	24 (610)	24 (610)	30 (762)	30 (762)	36 (914)	36 (914)	42 (1067)	42 (1067)
6.5 (1.98)	9 (229)	12 (305)	12 (305)	12 (305)	12 (305)	12 (305)	15 (381)	15 (381)	15 (381)	15 (381)	18 (457)	18 (457)	18 (457)	24 (457)	24 (610)	24 (610)	24 (610)	24 (610)	30 (762)	30 (762)	30 (762)	36 (914)	36 (914)	42 (1067)	42 (1067)

NOTE: The design engineer is solely responsible for assessing the bearing resistance (allowable bearing capacity) of the subgrade soils and determining the depth of foundation stone. Subgrade bearing resistance should be assessed with consideration for the range of soil moisture conditions expected under a stormwater system.

2.0 Foundations for Chambers

TABLE 2 – MC-4500 Minimum Required Foundation Depth in inches (millimeters)
Assumes 9" (229 mm) row spacing.

Cover Hgt. ft. (m)	Minimum Bearing Resistance for Service Loads ksf (kPa)																					
	4.1 (196)	4.0 (192)	3.9 (187)	3.8 (182)	3.7 (177)	3.6 (172)	3.5 (168)	3.4 (163)	3.3 (158)	3.2 (153)	3.1 (148)	3.0 (144)	2.9 (139)	2.8 (134)	2.7 (129)	2.6 (124)	2.5 (120)	2.4 (115)	2.3 (110)	2.2 (105)	2.1 (101)	2.0 (96)
2.0 (0.61)	9 (229)	9 (229)	9 (229)	9 (229)	9 (229)	9 (229)	9 (229)	9 (229)	9 (229)	9 (229)	9 (229)	9 (229)	9 (229)	9 (229)	12 (305)	12 (305)	12 (305)	15 (381)	15 (381)	18 (457)	18 (457)	24 (610)
2.5 (0.76)	9 (229)	9 (229)	9 (229)	9 (229)	9 (229)	9 (229)	9 (229)	9 (229)	9 (229)	9 (229)	9 (229)	9 (229)	9 (229)	12 (305)	12 (305)	15 (381)	15 (381)	18 (457)	18 (457)	24 (610)	24 (610)	24 (610)
3.0 (0.91)	9 (229)	9 (229)	9 (229)	9 (229)	9 (229)	9 (229)	9 (229)	9 (229)	9 (229)	9 (229)	9 (229)	12 (305)	12 (305)	12 (305)	15 (381)	15 (381)	18 (457)	18 (457)	24 (610)	24 (610)	24 (610)	30 (762)
3.5 (1.07)	9 (229)	9 (229)	9 (229)	9 (229)	9 (229)	9 (229)	9 (229)	9 (229)	9 (229)	12 (305)	12 (305)	12 (305)	15 (381)	15 (381)	18 (457)	18 (457)	24 (610)	24 (610)	24 (610)	30 (762)	30 (762)	36 (914)
4.0 (1.22)	9 (229)	9 (229)	9 (229)	9 (229)	9 (229)	9 (229)	9 (229)	12 (305)	12 (305)	12 (305)	15 (381)	15 (381)	15 (381)	18 (457)	18 (457)	24 (610)	24 (610)	24 (610)	30 (762)	30 (762)	36 (914)	36 (914)
4.5 (1.37)	9 (229)	9 (229)	9 (229)	9 (229)	9 (229)	12 (305)	12 (305)	12 (305)	15 (381)	15 (381)	15 (381)	18 (457)	18 (457)	24 (610)	24 (610)	24 (610)	24 (610)	30 (762)	30 (762)	36 (914)	36 (914)	42 (1067)
5.0 (1.52)	9 (229)	9 (229)	9 (229)	12 (305)	12 (305)	12 (305)	12 (305)	15 (381)	15 (381)	18 (457)	18 (457)	18 (457)	24 (610)	24 (610)	24 (610)	24 (610)	30 (762)	30 (762)	36 (914)	36 (914)	42 (1067)	48 (1219)
5.5 (1.68)	9 (229)	12 (305)	12 (305)	12 (305)	12 (305)	15 (381)	15 (381)	15 (381)	18 (457)	18 (457)	24 (610)	24 (610)	24 (610)	24 (610)	30 (762)	30 (762)	30 (762)	36 (914)	36 (914)	42 (1067)	48 (1219)	54 (1371)
6.0 (1.83)	12 (305)	12 (305)	12 (305)	15 (381)	15 (381)	15 (381)	18 (457)	18 (457)	18 (457)	24 (610)	24 (610)	24 (610)	24 (610)	30 (762)	30 (762)	30 (762)	36 (914)	36 (914)	42 (1067)	42 (1067)	48 (1219)	54 (1372)
6.5 (1.98)	12 (305)	15 (381)	15 (381)	15 (381)	15 (381)	18 (457)	18 (457)	24 (610)	24 (610)	24 (610)	24 (610)	24 (610)	30 (762)	30 (762)	30 (762)	36 (914)	36 (914)	42 (1067)	42 (1067)	48 (1219)	54 (1372)	66 (1676)
7.0 (2.13)	15 (381)	15 (381)	15 (381)	18 (457)	18 (457)	18 (457)	24 (610)	24 (610)	24 (610)	24 (610)	30 (762)	30 (762)	30 (762)	30 (762)	36 (914)	36 (914)	42 (1067)	42 (1067)	48 (1219)	54 (1372)	60 (1524)	66 (1676)

NOTE: The design engineer is solely responsible for assessing the bearing resistance (allowable bearing capacity) of the subgrade soils and determining the depth of foundation stone. Subgrade bearing resistance should be assessed with consideration for the range of soil moisture conditions expected under a stormwater system.

FIGURE 10 – MC-4500 Structural Cross Section Detail (Not to Scale)

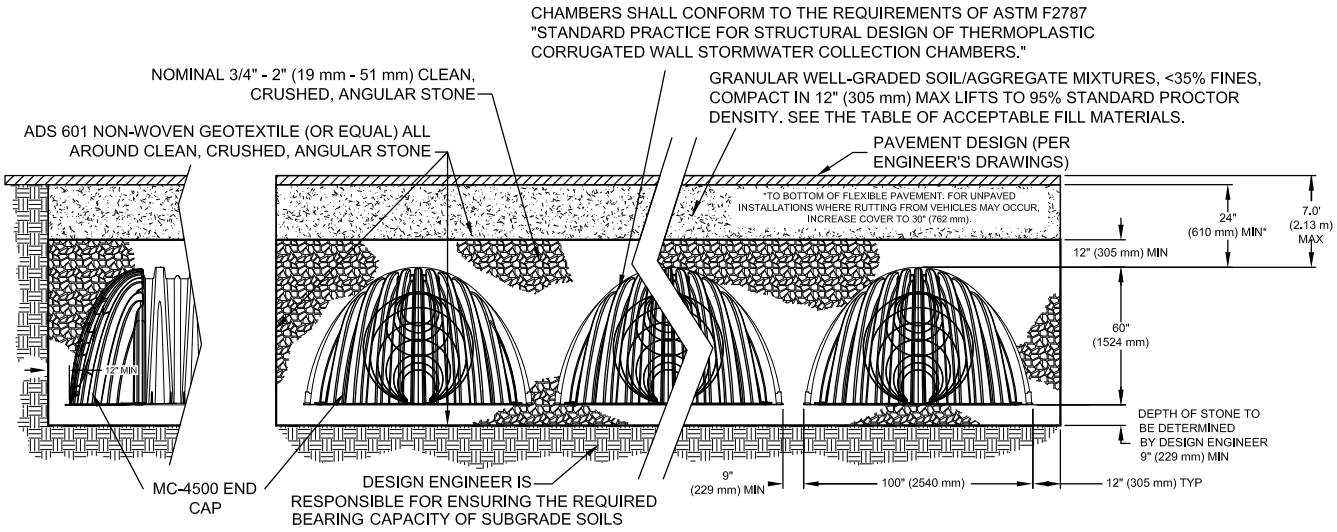

THE INSTALLED CHAMBER SYSTEM SHALL PROVIDE THE LOAD FACTORS SPECIFIED IN THE AASHTO LRFD BRIDGE DESIGN SPECIFICATIONS SECTION 12.12 FOR EARTH AND LIVE LOADS, WITH CONSIDERATION FOR IMPACT AND MULTIPLE VEHICLE PRESENCES.

3.1 FOUNDATION AND EMBEDMENT STONE

The stone surrounding the chambers consists of the *foundation* stone below the chambers and *embedment* stone surrounding the chambers. The foundation stone and embedment stone are important components of the structural system and also provide open void space for stormwater storage. **Table 3** provides the stone specifications that achieve both structural requirements and a porosity of 40% for stormwater storage. **Figure 11** specifies the extents of each backfill stone location.

TABLE 3 – Acceptable Fill Materials

Material Location	Description	AASHTO M43 Designation[1]	Compaction/Density Requirement
(D) Fill Material for layer 'D' starts from the top of the 'C' layer to the bottom of flexible pavement or unpaved finished grade above. Note that the pavement subbase may be part of the 'D' layer.	Any soil/rock materials, native soils or per engineer's plans. Check plans for pavement subgrade requirements.	N/A	Prepare per engineer's plans. Paved installations may have stringent material and preparation requirements.
(C) Fill Material for layer 'C' starts from the top of the embedment stone ('B' layer) to 24" (610 mm) above the top of the chamber. Note that pavement subbase may be part of the 'C' layer.	Granular well-graded soil/aggregate mixtures, <35% fines. Most pavement subbase materials can be used in lieu of this layer. (AASHTO M145 A-1, A-2, A-3)	3, 357, 4, 467, 5, 56, 57, 6, 67, 68, 7, 78, 8, 89, 9, 10	Begin compaction after 24" (610 mm) of material over the chambers is reached. Compact additional layers in 12" (305 mm) max. lifts to a min. 95% Standard Proctor density. See MC-3500 and MC-4500 Construction Guide for acceptable compaction equipment loads.
(B) Embedment Stone surrounding chambers from the foundation stone to the 'C' layer above.	Clean, crushed, angular stone, nominal size distribution 3/4 - 2" (19 mm - 51 mm)	3, 357, 4, 467, 5, 56, 57	No compaction required.
(A) Foundation Stone below the chambers from the subgrade up to the foot (bottom) of the chamber.	Clean, crushed, angular stone, nominal size distribution 3/4 - 2" (19 mm - 51 mm)	3, 357, 4, 467, 5, 56, 57	Plate compact or roll to achieve a 95% Standard Proctor Density.[2]

PLEASE NOTE:

1. ***The listed AASHTO designations are for gradations only. The stone must also be clean, crushed, angular. For example, a specification for #4 stone would state: "clean, crushed, angular no. 4 (AASHTO M43) stone."***
2. ***As an alternate to Proctor Testing and field density measurements on open graded stone, StormTech compaction requirements are met for 'A' location materials when placed and compacted in 9" (229 mm) (max) lifts using two full passes with an appropriate compactor.***

FIGURE 11 – Fill Material Locations

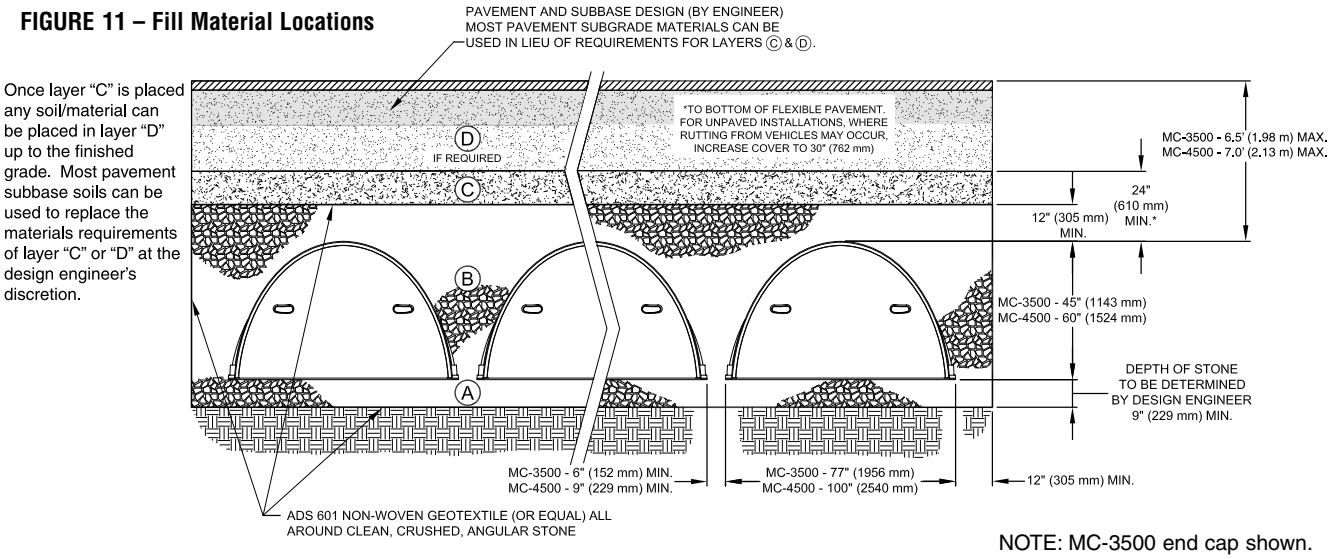

NOTE: MC-3500 end cap shown.

3.0 Required Materials/Row Separation

3.2 FILL ABOVE CHAMBERS

Refer to **Table 3** and **Figure 11** for acceptable fill material above the clean, crushed, angular stone. StormTech requires a minimum of 24" (610 mm) from the top of the chamber to the bottom of flexible pavement. For non-paved installations where rutting from vehicles may occur StormTech requires a minimum of 30" (762 mm) from top of chamber to finished grade.

3.3 GEOTEXTILE SEPARATION

A non-woven geotextile meeting AASHTO M288 Class 2 separation requirements must be installed to completely envelope the system and prevent soil intrusion into the crushed, angular stone. Overlap adjacent geotextile rolls per AASHTO M288 separation guidelines. See **Table 4** for a list of acceptable geotextiles.

TABLE 4 – Some Suitable Geotextiles

Manufacturer	AASHTO M288 Class 2 Non-Woven*	AASHTO M288 Class 1 Woven**
Belton Industries	———	Beltech 977
Carthage Mills	FX-60HS, FX-80HS	FX-66
GSE Lining Technology	NW6, NW8	——
Maccaferri	MacTex MX245, MacTex MX275	——
Pavco-Amanco	NT3000M, NT4000M	TR 4000
Propex	Geotex 651, Geotex 861, Geotex 601, Geotex 701, Geotex 801	Geotex 315ST, Geotex 2x2HF, Geotex 250ST
SKAPS Industries	GT 160NW, GT 180NW	W315
Tencate Mirafi	Mirafi 160N, Mirafi 180N	Mirafi 600X, Filterweave 403, Filterweave 404, Geolon HP570, Geolon HP665, Geolon HP770
TNS Advanced Tech.	R060, R070, R080, R100	——
US Fabrics	US 205NW, US 160NW	US 315

*AASHTO M288 Class 2 Non-Woven Geotextile Application: 1. Separation layer between angular stone and surrounding soils to prevent fines intrusion. 2. Filter layer over the chambers of the StormTech Isolator™ Row to prevent fines migration out of row while maintaining adequate hydraulic flows.

**AASHTO M288 Class 1 Woven Geotextile Application: 1. Filtration/stabilization layer for the angular stone foundation of the StormTech Isolator™ Row to prevent scouring of the stone base during the JetVac maintenance procedure, modest hydraulic flows maintained. 2. At each inlet row to prevent scouring of the foundation stone.

3.4 PARALLEL ROW SEPARATION/ PERPENDICULAR BED SEPARATION

Parallel Row Separation

The minimum installed spacing between parallel rows after backfilling is 6" (152 mm) for the MC-3500 chamber and 9" (229 mm) for the MC-4500 chamber (measurement taken between the outside edges of the feet). Spacers may be used for layout convenience. Row spacing wider than the minimum spacing above may be specified.

Increasing the spacing between chamber rows may allow the application of StormTech chambers with either less foundation stone or with weaker subgrade soils. This may be a good option where vertical restrictions on site prevent the use of a deeper foundation.

Perpendicular Bed Separation

When beds are laid perpendicular to each other, a minimum installed spacing of 36" (914 mm) between beds is required.

Spacers for row separation.

4.1 GENERAL

StormTech subsurface chamber systems offer the flexibility for a variety of inlet and outlet configurations. Contact the StormTech Technical Services Department or your local StormTech representative for assistance configuring inlet and outlet connections.

The open graded stone around and under the chambers provides a significant conveyance capacity ranging from approximately 0.8 cfs (23 l/s) to 13 cfs (368 l/s) per MC-3500 chamber and 0.54 cfs (15 l/s) to 8.5 cfs (240 l/s) for the MC-4500 chamber. The actual conveyance capacity is dependent upon stone size, depth of foundation stone and head of water. Although the high conveyance capacity of the open graded stone is an important component of the flow network, StormTech recommends that a system of inlet and outlet manifolds be designed to distribute and convey the peak flow through the chamber system.

It is the responsibility of the design engineer to provide the design flow rates and storage volumes for the stormwater system and to ensure that the final design meets all conveyance and storage requirements. However, StormTech will work with the design engineer to assist with manifold and chamber layouts that meet the design objectives.

4.2 THE ISOLATOR™ ROW

The Isolator Row is a patented system that inexpensively captures total suspended solids (TSS) and debris and provides easy access for inspection and maintenance. A double layer of woven geotextile between the bottom of the chambers and the foundation stone provides the filter media that satisfies most contaminant removal objectives. Each installed MC-3500 chamber and MC-3500 end cap provides 43.2 ft^2 (4.0 m^2) and 7.5 ft^2 (0.7 m^2) of bottom filter area respectively. Each installed MC-4500 chamber and MC-4500 end cap provides 30.1 ft^2 (2.80 m^2) and 12.8 ft^2 (1.19 m^2) of bottom filter area respectively.

The Isolator Row can be configured for maintenance objectives or, in some regulatory jurisdictions, for water quality objectives. For water quality applications, Isolator Rows can be sized based on water quality volume or flow rate.

All Isolator Rows require: 1) a manhole for maintenance access, 2) a means of diversion of flows to the Isolator Row and 3) a high flow bypass. Flow diversion can be accomplished by either a weir in the upstream access manhole or simply by feeding the Isolator Row at a lower elevation than the high flow bypass. Contact StormTech for assistance sizing Isolator Rows.

When additional stormwater treatment is required, StormTech systems can be configured using a treatment train approach where other stormwater BMPs are located in series.

FIGURE 12 – StormTech Isolator™ Row Detail

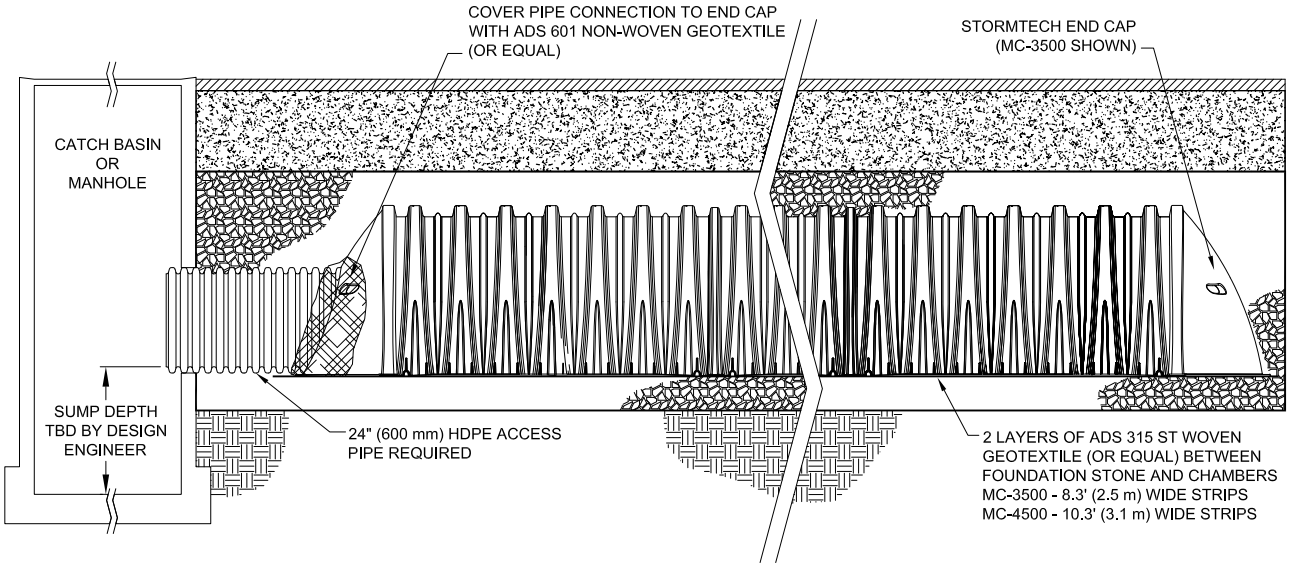

4.0 Hydraulics

FIGURE 13 – Typical Inlet Configuration With Isolator Row and Scour Protection

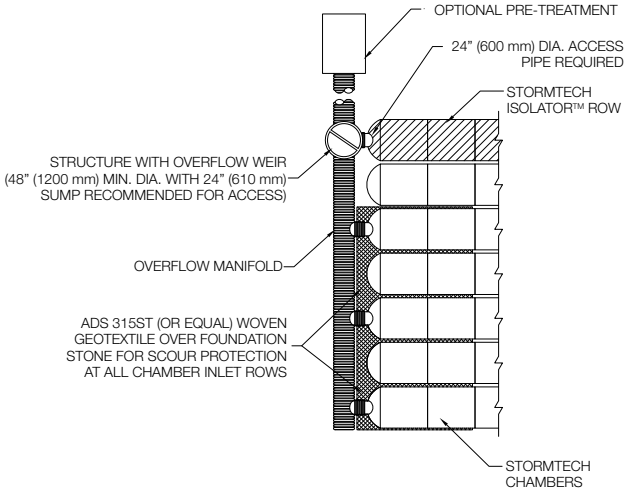

4.3 INLET MANIFOLDS

The primary function of the inlet manifold is to convey and distribute flows to a sufficient number of rows in the chamber bed such that there is ample conveyance capacity to pass the peak flows without creating an unacceptable backwater condition in upstream piping or scour the foundation stone under the chambers.

Manifolds are connected to the end caps either at the top or bottom of the end cap. High inlet flow rates from either connection location produce a shear scour potential of the foundation stone. Inlet flows from top inlets also produce impingement scour potential. Scour potential is reduced when standing water is present over the foundation stone. However, for safe design across the wide range of applications, StormTech assumes minimal standing water at the time the design flow occurs.

To minimize scour potential, StormTech recommends the installation of woven scour protection fabric at each inlet row. This enables a protected transition zone from the concentrated flow coming out of the inlet pipe to a uniform flow across the entire width of the chamber for both top and bottom connections.

Allowable flow rates for design are dependent upon: the elevation of inlet pipe, foundation stone size and scour protection. With an appropriate scour protection geotextile installed from the end cap to at least 15' (4.57 m) in front of the inlet pipe for the MC-3500 and 14.5' (4.42 m) for the MC-4500, for both top and bottom feeds, the flow rates listed in **Table 5** can be used for all StormTech specified foundation stone gradations.

TABLE 16 – Allowable Inlet Flows*

Inlet Pipe Diameter Inches (mm)	Allowable Maximum Flow Rate cfs (l/s)
12 (300)	2 (57)
15 (375)	3.5 (99)
18 (450)	5.5 (156)
24 (600)	8.5 (241) [MC-3500]
24 (600)	9.5 (269) [MC-4500]

* Assumes appropriate length of scour fabric per section 4.3.

4.4 OUTLET MANIFOLDS

The primary function of the outlet manifold is to convey peak flows from the chamber system to the outlet control structure. Outlet manifolds are often sized for attenuated flows. They may be smaller in diameter and have fewer row connections than inlet manifolds. In some applications however, the intent of the outlet piping is to convey an unattenuated bypass flow rate and manifolds may be sized similar to inlet manifolds.

Since chambers are generally flowing at or near full at the time of the peak outlet flow rate, scour is generally not governing and outlet manifold sizing is based on pipe flow equations. In most cases, StormTech recommends that outlet manifolds connect the same rows that are connected to an inlet manifold. This provides a continuous flow path through open conduits to pass the peak flow without dependence on passing peak flows through stone.

The primary function of the underdrains is to draw down water stored in the stone below the invert of the manifold. Underdrains are generally not sized for conveyance of the peak flow.

FIGURE 14 – Typical Inlet, Outlet and Underdrain Configuration

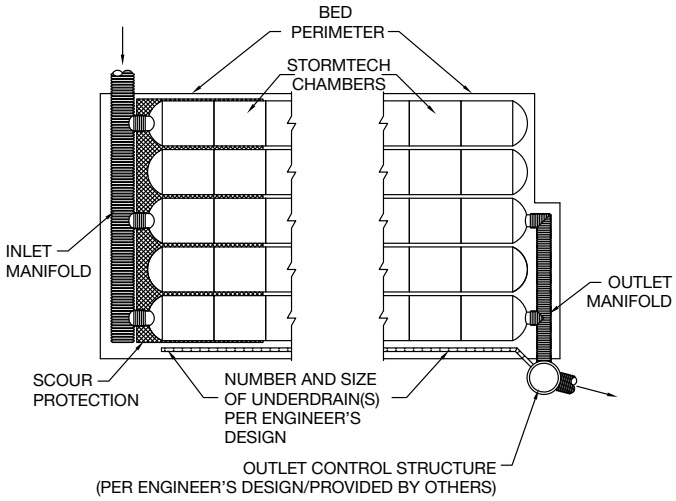

5.0 Cumulative Storage Volumes

Tables 6 and **7** provide cumulative storage volumes for the MC-3500 chamber and end cap. These tables can be used to calculate the stage–storage relationship for the retention or detention system. Digital spreadsheets in which the number of chambers and end caps can be input for quick cumulative storage calculations are available at www.stormtech.com. For assistance with site-specific calculations or input into routing software, contact the StormTech Technical Services Department.

TABLE 6 – MC-3500 Incremental Storage Volume Per Chamber

Assumes 40% stone porosity. Calculations are based upon a 9" (229 mm) stone base under the chambers, 12" (305 mm) of stone above chambers, and 6" (152 mm) spacing between chambers.

Depth of Water in System Inches (mm)	Cumulative Chamber Storage ft³ (m³)	Total System Cumulative Storage ft³ (m³)
66 (1676)	0	176.88 (5.009)
65 (1651)	0	175.22 (4.962)
64 (1626)	Stone 0	173.57 (4.915)
63 (1600)	Cover 0	171.92 (4.868)
62 (1575)	0	170.27 (4.821)
61 (1549)	0	168.61 (4.775)
60 (1524)	0	166.96 (4.728)
59 (1499)	0	165.31 (4.681)
58 (1473)	0	163.66 (4.634)
57 (1448)	0	162.01 (4.588)
56 (1422)	0	160.35 (4.541)
55 (1397)	0	158.70 (4.494)
54 (1372)	113.04 (3.201)	157.05 (4.447)
53 (1346)	112.98 (3.199)	155.36 (4.399)
52 (1321)	112.78 (3.194)	153.59 (4.349)
51 (1295)	112.47 (3.185)	151.75 (4.297)
50 (1270)	111.86 (3.168)	149.73 (4.240)
49 (1245)	110.89 (3.140)	147.50 (4.177)
48 (1219)	109.68 (3.106)	145.12 (4.109)
47 (1194)	108.29 (3.066)	142.64 (4.039)
46 (1168)	106.75 (3.023)	140.06 (3.966)
45 (1143)	105.07 (2.975)	137.39 (3.891)
44 (1118)	103.26 (2.924)	134.66 (3.813)
43 (1092)	101.33 (2.869)	131.85 (3.734)
42 (1067)	99.31 (2.812)	128.98 (3.652)
41 (1041)	97.18 (2.752)	126.05 (3.569)
40 (1016)	94.97 (2.689)	123.07 (3.485)
39 (991)	92.66 (2.624)	120.04 (3.399)
38 (965)	90.28 (2.556)	116.96 (3.312)
37 (940)	87.82 (2.487)	113.83 (3.223)
36 (914)	85.30 (2.415)	110.66 (3.134)
35 (889)	82.70 (2.342)	107.45 (3.043)
34 (864)	80.04 (2.267)	104.20 (2.951)
33 (838)	77.32 (2.189)	100.92 (2.858)

Depth of Water in System Inches (mm)	Cumulative Chamber Storage ft³ (m³)	Total System Cumulative Storage ft³ (m³)
32 (813)	74.54 (2.111)	97.60 (2.764)
31 (787)	71.71 (2.031)	94.25 (2.669)
30 (762)	68.83 (1.949)	90.87 (2.573)
29 (737)	65.89 (1.866)	87.45 (2.476)
28 (711)	62.91 (1.782)	84.01 (2.379)
27 (686)	59.89 (1.696)	80.55 (2.281)
26 (660)	56.82 (1.609)	77.05 (2.182)
25 (635)	53.72 (1.521)	73.54 (2.082)
24 (610)	50.57 (1.432)	70.00 (1.982)
23 (584)	47.39 (1.342)	66.44 (1.881)
22 (559)	44.18 (1.251)	62.86 (1.780)
21 (533)	40.93 (1.159)	59.26 (1.678)
20 (508)	37.66 (1.066)	55.64 (1.576)
19 (483)	34.35 (0.973)	52.01 (1.473)
18 (457)	31.02 (0.878)	48.35 (1.369)
17 (432)	27.66 (0.783)	44.69 (1.265)
16 (406)	24.28 (0.688)	41.00 (1.161)
15 (381)	20.87 (0.591)	37.31 (1.056)
14 (356)	17.45 (0.494)	33.60 (0.951)
13 (330)	14.00 (0.396)	29.88 (0.846)
12 (305)	10.53 (0.298)	26.15 (0.740)
11 (279)	7.04 (0.199)	22.40 (0.634)
10 (254)	3.53 (0.100)	18.64 (0.528)
9 (229)	0	14.87 (0.421)
8 (203)	0	13.22 (0.374)
7 (178)	0	11.57 (0.328)
6 (152)	Stone 0	9.91 (0.281)
5 (127)	Foundation 0	8.26 (0.234)
4 (102)	0	6.61 (0.187)
3 (76)	0	4.96 (0.140)
2 (51)	0	3.30 (0.094)
1 (25)	0	1.65 (0.047)

NOTE: Add 1.65 ft³ (0.047 m³) of storage for each additional inch (25 mm) of stone foundation.

Contact StormTech for cumulative volume spreadsheets in digital format.

TABLE 7 – MC-3500 Incremental Storage Volume Per End Cap

Assumes 40% stone porosity. Calculations are based upon a 9" (229 mm) stone base under the end caps, 12" (305 mm) of stone above end caps, 6" (152 mm) of spacing between end caps and 6" (152 mm) of stone perimeter.

Depth of Water in System Inches (mm)	Cumulative End Cap Storage ft³ (m³)	Total System Cumulative Storage ft³ (m³)
66 (1676)	0	45.65 (1.293)
65 (1651)	0	45.10 (1.277)
64 (1626)	Stone 0	44.55 (1.262)
63 (1600)	Cover 0	44.00 (1.246)
62 (1575)	0	43.45 (1.230)
61 (1549)	0	42.90 (1.215)
60 (1524)	0	42.35 (1.199)
59 (1499)	0	41.80 (1.184)
58 (1473)	0	41.25 (1.168)
57 (1448)	0	40.70 (1.153)
56 (1422)	0	40.15 (1.137)
55 (1397)	0	39.61 (1.122)
54 (1372)	15.64 (0.443)	39.06 (1.106)
53 (1346)	15.64 (0.443)	38.51 (1.090)
52 (1321)	15.63 (0.443)	37.95 (1.075)
51 (1295)	15.62 (0.442)	37.40 (1.059)
50 (1270)	15.60 (0.442)	36.84 (1.043)
49 (1245)	15.56 (0.441)	36.26 (1.027)
48 (1219)	15.51 (0.439)	35.68 (1.010)
47 (1194)	15.44 (0.437)	35.09 (0.994)
46 (1168)	15.35 (0.435)	34.49 (0.977)
45 (1143)	15.25 (0.432)	33.88 (0.959)
44 (1118)	15.13 (0.428)	33.26 (0.942)
43 (1092)	14.99 (0.424)	32.62 (0.924)
42 (1067)	14.83 (0.420)	31.98 (0.905)
41 (1041)	14.65 (0.415)	31.32 (0.887)
40 (1016)	14.45 (0.409)	30.65 (0.868)
39 (991)	14.24 (0.403)	29.97 (0.849)
38 (965)	14.00 (0.396)	29.28 (0.829)
37 (948)	13.74 (0.389)	28.58 (0.809)
36 (914)	13.47 (0.381)	27.86 (0.789)
35 (889)	13.18 (0.373)	27.14 (0.769)
34 (864)	12.86 (0.364)	26.40 (0.748)

Depth of Water in System Inches (mm)	Cumulative End Cap Storage ft³ (m³)	Total System Cumulative Storage ft³ (m³)
33 (838)	12.53 (0.355)	25.65 (0.726)
32 (813)	12.18 (0.345)	24.89 (0.705)
31 (787)	11.81 (0.335)	24.12 (0.683)
30 (762)	11.42 (0.323)	23.34 (0.661)
29 (737)	11.01 (0.312)	22.54 (0.638)
28 (711)	10.58 (0.300)	21.73 (0.615)
27 (686)	10.13 (0.287)	20.92 (0.592)
26 (680)	9.67 (0.274)	20.09 (0.569)
25 (610)	9.19 (0.260)	19.25 (0.545)
24 (609)	8.70 (0.246)	18.41 (0.521)
23 (584)	8.19 (0.232)	17.55 (0.497)
22 (559)	7.67 (0.217)	16.69 (0.473)
21 (533)	7.13 (0.202)	15.82 (0.448)
20 (508)	6.59 (0.187)	14.94 (0.423)
19 (483)	6.03 (0.171)	14.06 (0.398)
18 (457)	5.46 (0.155)	13.17 (0.373)
17 (432)	4.88 (0.138)	12.27 (0.347)
16 (406)	4.30 (0.122)	11.37 (0.322)
15 (381)	3.70 (0.105)	10.46 (0.296)
14 (356)	3.10 (0.088)	9.55 (0.270)
13 (330)	2.49 (0.071)	8.64 (0.245)
12 (305)	1.88 (0.053)	7.72 (0.219)
11 (279)	1.26 (0.036)	6.80 (0.192)
10 (254)	0.63 (0.018)	5.87 (0.166)
9 (229)	0	4.95 (0.140)
8 (203)	0	4.40 (0.124)
7 (178)	0	3.85 (0.109)
6 (152)	0	3.30 (0.093)
5 (127)	Stone 0	2.75 (0.078)
4 (102)	Foundation 0	2.20 (0.062)
3 (76)	0	1.65 (0.047)
2 (51)	0	1.10 (0.031)
1 (25)	0	0.55 (0.016)

NOTE: Add 0.55 ft³ (0.016 m³) of storage for each additional inch (25 mm) of stone foundation.

Contact StormTech for cumulative volume spreadsheets in digital format.

5.0 Cumulative Storage Volumes

Tables 8 and **9** provide cumulative storage volumes for the MC-4500 chamber and end cap. These tables can be used to calculate the stage-storage relationship for the retention or detention system. Digital spreadsheets in which the number of chambers and end caps can be input for quick cumulative storage calculations are available at www.stormtech.com. For assistance with site-specific calculations or input into routing software, contact the StormTech Technical Services Department.

TABLE 8 – MC-4500 Incremental Storage Volume Per Chamber

Assumes 40% stone porosity. Calculations are based upon a 9" (229 mm) stone base under the chambers, 12" (305 mm) of stone above chambers, and 9" (229 mm) spacing between chambers.

Depth of Water in System Inches (mm)	Cumulative Chamber Storage ft³ (m³)	Total System Cumulative Storage ft³ (m³)
81 (2057)	0	162.62 (4.605)
80 (2032)	0	161.40 (4.570)
79 (2007)	Stone 0	160.18 (4.536)
78 (1981)	Cover 0	158.96 (4.501)
77 (1956)	0	157.74 (4.467)
76 (1930)	0	156.52 (4.432)
75 (1905)	0	155.30 (4.398)
74 (1880)	0	154.09 (4.363)
73 (1854)	0	152.87 (4.329)
72 (1829)	0	151.65 (4.294)
71 (1803)	0	150.43 (4.260)
70 (1778)	0	149.21 (4.225)
69 (1753)	106.51 (3.016)	147.99 (4.191)
68 (1727)	106.47 (3.015)	146.75 (4.156)
67 (1702)	106.35 (3.012)	145.46 (4.119)
66 (1676)	106.18 (3.007)	144.14 (4.082)
65 (1651)	105.98 (3.001)	142.80 (4.044)
64 (1626)	105.71 (2.993)	141.42 (4.005)
63 (1600)	105.25 (2.981)	139.93 (3.962)
62 (1575)	104.59 (2.962)	138.31 (3.917)
61 (1549)	103.79 (2.939)	136.61 (3.869)
60 (1524)	102.88 (2.913)	134.85 (3.819)
59 (1499)	101.88 (2.885)	133.03 (3.767)
58 (1473)	100.79 (2.854)	131.16 (3.714)
57 (1448)	99.63 (2.821)	129.24 (3.660)
56 (1422)	98.39 (2.786)	127.28 (3.604)
55 (1397)	97.10 (2.749)	125.28 (3.548)
54 (1372)	95.73 (2.711)	123.25 (3.490)
53 (1346)	94.32 (2.671)	121.18 (3.431)
52 (1321)	92.84 (2.629)	119.08 (3.372)
51 (1295)	91.32 (2.586)	116.94 (3.311)
50 (1270)	89.74 (2.541)	114.78 (3.250)
49 (1245)	88.12 (2.495)	112.59 (3.188)
48 (1219)	86.45 (2.448)	110.37 (3.125)
47 (1194)	84.75 (2.400)	108.13 (3.062)
46 (1168)	83.00 (2.350)	105.86 (2.998)
45 (1143)	81.21 (2.300)	103.56 (2.933)
44 (1118)	79.38 (2.248)	101.25 (2.867)
43 (1092)	77.52 (2.195)	98.91 (2.801)
42 (1067)	75.62 (2.141)	96.55 (2.734)
41 (1041)	73.69 (2.087)	94.18 (2.667)
40 (1016)	71.72 (2.031)	91.78 (2.599)
39 (991)	69.73 (1.974)	89.36 (2.531)
38 (965)	67.70 (1.917)	86.93 (2.462)
37 (948)	65.65 (1.859)	84.48 (2.392)
36 (914)	63.57 (1.800)	82.01 (2.322)
35 (889)	61.46 (1.740)	79.53 (2.252)
34 (864)	59.32 (1.680)	77.03 (2.181)
33 (838)	57.17 (1.619)	74.52 (2.110)
32 (813)	54.98 (1.557)	71.99 (2.038)
31 (787)	52.78 (1.495)	69.45 (1.966)
30 (762)	50.55 (1.431)	66.89 (1.894)
29 (737)	48.30 (1.368)	64.32 (1.821)
28 (711)	46.03 (1.303)	61.74 (1.748)
27 (686)	43.74 (1.239)	59.15 (1.675)
26 (680)	41.43 (1.173)	56.55 (1.601)
25 (610)	39.11 (1.107)	53.93 (1.527)
24 (609)	36.77 (1.041)	51.31 (1.453)
23 (584)	34.41 (0.974)	48.67 (1.378)
22 (559)	32.03 (0.907)	46.03 (1.303)
21 (533)	29.64 (0.839)	43.38 (1.228)
20 (508)	27.23 (0.771)	40.71 (1.153)
19 (483)	24.81 (0.703)	38.04 (1.077)
18 (457)	22.38 (0.634)	35.37 (1.001)
17 (432)	19.94 (0.565)	32.68 (0.925)
16 (406)	17.48 (0.495)	29.99 (0.849)
15 (381)	15.01 (0.425)	27.29 (0.773)
14 (356)	12.53 (0.355)	24.58 (0.696)
13 (330)	10.05 (0.284)	21.87 (0.619)
12 (305)	7.55 (0.214)	19.15 (0.542)
11 (279)	5.04 (0.143)	16.43 (0.465)
10 (254)	2.53 (0.072)	13.70 (0.388)
9 (229)	0	10.97 (0.311)
8 (203)	0	9.75 (0.276)
7 (178)	0	8.53 (0.242)
6 (152)	Stone 0	7.31 (0.207)
5 (127)	Foundation 0	6.09 (0.173)
4 (102)	0	4.87 (0.138)
3 (76)	0	3.66 (0.104)
2 (51)	0	2.44 (0.069)
1 (25)	0	1.22 (0.035)

NOTE: Add 1.22 ft³ (0.035 m³) of storage for each additional inch (25 mm) of stone foundation. Contact StormTech for cumulative volume spreadsheets in digital format.

TABLE 9 – MC-4500 Incremental Storage Volume Per End Cap

Assumes 40% stone porosity. Calculations are based upon a 9" (229 mm) stone base under the end caps, 12" (305 mm) of stone above end caps, 9" (229 mm) of spacing between end caps and 12" (305 mm) of stone perimeter.

Depth of Water in System Inches (mm)	Cumulative Chamber Storage ft³ (m³)	Total System Cumulative Storage ft³ (m³)
81 (2057)	0	108.69 (3.078)
80 (2032)	0	107.62 (3.047)
79 (2007)	Stone 0	106.54 (3.017)
78 (1981)	Cover 0	105.46 (2.986)
77 (1956)	0	104.38 (2.956)
76 (1930)	0	103.31 (2.925)
75 (1905)	0	102.23 (2.895)
74 (1880)	0	101.15 (2.864)
73 (1854)	0	100.07 (2.834)
72 (1829)	0	99.00 (2.803)
71 (1803)	0	97.92 (2.773)
70 (1778)	0	96.84 (2.742)
69 (1753)	35.71 (1.011)	95.76 (2.712)
68 (1727)	35.71 (1.011)	94.69 (2.681)
67 (1702)	35.70 (1.011)	93.60 (2.651)
66 (1676)	35.67 (1.010)	92.51 (2.620)
65 (1651)	35.62 (1.009)	91.40 (2.588)
64 (1626)	35.56 (1.007)	90.29 (2.557)
63 (1600)	35.47 (1.004)	89.16 (2.525)
62 (1575)	35.36 (1.001)	88.01 (2.492)
61 (1549)	35.21 (0.997)	86.85 (2.459)
60 (1524)	35.05 (0.992)	85.67 (2.426)
59 (1499)	34.86 (0.987)	84.48 (2.392)
58 (1473)	34.64 (0.981)	83.27 (2.358)
57 (1448)	34.40 (0.974)	82.05 (2.323)
56 (1422)	34.13 (0.966)	80.81 (2.288)
55 (1397)	33.83 (0.958)	79.55 (2.253)
54 (1372)	33.51 (0.949)	78.28 (2.217)
53 (1346)	33.16 (0.939)	77.00 (2.180)
52 (1321)	32.79 (0.928)	75.70 (2.144)
51 (1295)	32.39 (0.917)	74.38 (2.106)
50 (1270)	31.98 (0.906)	73.06 (2.069)
49 (1245)	31.54 (0.893)	71.71 (2.031)
48 (1219)	31.07 (0.880)	70.36 (1.992)
47 (1194)	30.59 (0.866)	68.99 (1.954)
46 (1168)	30.09 (0.852)	67.61 (1.915)
45 (1143)	29.56 (0.837)	66.22 (1.875)
44 (1118)	29.02 (0.822)	64.81 (1.835)
43 (1092)	28.45 (0.806)	63.40 (1.795)

NOTE: Add 1.08 ft³ (0.031 m³) of storage for each additional inch (25 mm) of stone foundation. Contact stormtech for cumulative volume spreadsheets in digital format.

Depth of Water in System Inches (mm)	Cumulative Chamber Storage ft³ (m³)	Total System Cumulative Storage ft³ (m³)
42 (1067)	27.87 (0.789)	61.97 (1.755)
41 (1041)	27.27 (0.772)	60.53 (1.714)
40 (1016)	26.65 (0.755)	59.08 (1.673)
39 (991)	26.01 (0.736)	57.62 (1.632)
38 (965)	25.35 (0.718)	56.15 (1.590)
37 (948)	24.68 (0.699)	54.67 (1.548)
36 (914)	23.99 (0.679)	53.18 (1.506)
35 (889)	23.28 (0.659)	51.68 (1.463)
34 (864)	22.56 (0.639)	50.17 (1.421)
33 (838)	21.82 (0.618)	48.64 (1.377)
32 (813)	21.06 (0.596)	47.11 (1.334)
31 (787)	20.29 (0.575)	45.57 (1.290)
30 (762)	19.50 (0.552)	44.02 (1.247)
29 (737)	18.70 (0.530)	42.46 (1.202)
28 (711)	17.88 (0.506)	40.89 (1.158)
27 (686)	17.04 (0.483)	39.31 (1.113)
26 (680)	16.19 (0.459)	37.73 (1.068)
25 (610)	15.33 (0.434)	36.14 (1.023)
24 (609)	14.46 (0.410)	34.53 (0.978)
23 (584)	13.58 (0.384)	32.93 (0.932)
22 (559)	12.68 (0.359)	31.31 (0.887)
21 (533)	11.77 (0.333)	29.69 (0.841)
20 (508)	10.85 (0.307)	28.06 (0.794)
19 (483)	9.91 (0.281)	26.42 (0.748)
18 (457)	8.97 (0.254)	24.77 (0.702)
17 (432)	8.01 (0.227)	23.12 (0.655)
16 (406)	7.04 (0.199)	21.46 (0.608)
15 (381)	6.07 (0.172)	19.80 (0.561)
14 (356)	5.08 (0.144)	18.13 (0.513)
13 (330)	4.08 (0.116)	16.45 (0.466)
12 (305)	3.07 (0.087)	14.77 (0.418)
11 (279)	2.06 (0.058)	13.09 (0.371)
10 (254)	1.03 (0.029)	11.39 (0.323)
9 (229)	0	9.70 (0.275)
8 (203)	0	8.62 (0.244)
7 (178)	0	7.54 (0.214)
6 (152)	Stone 0	6.46 (0.183)
5 (127)	Foundation 0	5.39 (0.153)
4 (102)	0	4.31 (0.122)
3 (76)	0	3.23 (0.092)
2 (51)	0	2.15 (0.061)
1 (25)	0	1.08 (0.031)

6.0 MC-3500 Chamber System Sizing

The following steps provide the calculations necessary for preliminary sizing of an MC-3500 chamber system. For custom bed configurations to fit specific sites, contact the StormTech Technical Services Department or your local StormTech representative.

1) Determine the amount of storage volume (V_S) required. It is the design engineer's sole responsibility to determine the storage volume required.

TABLE 10 – Storage Volume Per Chamber/End Cap ft³ (m³)

MC-3500	Bare Unit Storage ft³ (m³)	Chamber/End Cap and Stone Volume — Stone Foundation Depth in. (mm)			
		9" (229 mm)	12" (305 mm)	15" (381 mm)	18" (457 mm)
Chamber	113 (3.20)	176.8 (5.01)	181.8 (5.15)	186.8 (5.29)	191.7 (5.43)
End Cap	15.6 (0.44)	45.6 (1.29)	47.3 (1.34)	48.9 (1.39)	50.6 (1.43)

NOTE: Assumes 40% porosity for the stone plus the chamber/end cap volume. End cap volume assumes 6" (152 mm) stone perimeter.

2) Determine the number of chambers (C) required. To calculate the number of chambers required for adequate storage, divide the storage volume (Vs) by the storage volume of the chamber (from **Table 10**), as follows: **C = Vs / Storage Volume per Chamber**

3) Determine the number of end caps required. The number of end caps (EC) required depends on the number of rows required by the project. Once the number of chamber rows is determined, multiply the number of chamber rows by 2 to determine the number of end caps required. **EC = No. of Chamber Rows x 2**

NOTE: Additional end caps may be required for systems having inlet locations within the chamber bed.

4) Determine additional storage provided by end caps. End Caps will provide additional storage to the project. Multiply the number of end caps (EC) by the storage volume per end cap (ECs) to determine the additional storage (As) provided by the end caps. **As = EC x ECs**

5) Adjust number of chambers (C) to account for additional end cap storage (As). The original number of chambers (C) can now be reduced due to the additional storage in the end caps. Divide the additional storage (As) by the storage volume per chamber to determine the number of chambers that can be removed. **Number of chambers to remove = As/ volume per chamber**

NOTE: Additional storage exists in the stone perimeter as well as in the inlet and outlet manifold systems. Contact StormTech's Technical Services Department for assistance with determining the number of chambers and end caps required for your project.

6) Determine the required bed size (S). The size of the bed will depend on the number of chambers and end caps required:
MC-3500 area per chamber = 49.6 ft² (4.6 m²)
MC-3500 area per end cap = 13.0 ft² (1.2 m²)

S = (C x area per chamber) + (EC x area per end cap)

NOTE: It is necessary to add 12" (305 mm) of stone perimeter parallel to the chamber rows and 6" (152 mm) of stone perimeter from the base of all end caps. The additional area due to perimeter stone is not included in the area numbers above.

7) Determine the amount of stone (V_{St}) required. To calculate the total amount of clean, crushed, angular stone required, multiply the number of chambers (C) and the number of end caps (EC) by the selected weight of stone from **Table 11.**

NOTE: Clean, crushed, angular stone is also required around the perimeter of the system.

TABLE 11 – Amount of Stone Per Chamber/End Cap

ENGLISH tons (yds³)	Stone Foundation Depth			
	9"	**12"**	**15"**	**18"**
MC-3500	8.4 (5.9)	9.0 (6.4)	9.7 (6.8)	10.3 (7.3)
End Cap	3.9 (2.8)	4.2 (2.9)	4.4 (3.1)	4.6 (3.2)
METRIC kg (m³)	**229 mm**	**305 mm**	**381 mm**	**457 mm**
MC-3500	7620 (4.5)	8164 (4.9)	8800 (5.2)	9344 (5.6)
End Cap	3538 (2.1)	3810 (2.2)	3992 (2.4)	4173 (2.4)

NOTE: Assumes 12" (305 mm) of stone above, 6" (152 mm) row spacing, and 6" (152 mm) of perimeter stone in front of end caps.

8) Determine the volume of excavation (Ex) required. Each additional foot of cover will add a volume of excavation of 1.8 yd³ (1.4 m³) per MC-3500 chamber and 0.6 yd³ (0.5 m³) per MC-3500 end cap.

TABLE 12 – Volume of Excavation Per Chamber/End Cap in yd³ (m³)

	Stone Foundation Depth			
	9" (229 mm)	**12" (305 mm)**	**15" (381 mm)**	**18" (457 mm)**
MC-3500	11.9 (9.1)	12.4 (9.5)	12.9 (9.9)	13.3 (10.2)
End Cap	4.0 (3.1)	4.1 (3.1)	4.3 (3.3)	4.4 (3.4)

NOTE: Assumes 6" (152 mm) of separation between chamber rows, 6" (152 mm) of perimeter in front of end caps, and 24" (610 mm) of cover. The volume of excavation will vary as the depth of cover increases.

9) Determine the area of geotextile (F) required. The bottom, top and sides of the bed must be covered with a non-woven geotextile (filter fabric) that meets AASHTO M288 Class 2 requirements. The area of the sidewalls must be calculated and a 24" (610 mm) overlap must be included for all seams. Geotextiles typically come in 15 foot (4.57 m) wide rolls.

6.0 MC-4500 Chamber System Sizing

The following steps provide the calculations necessary for preliminary sizing of an MC-4500 chamber system. For custom bed configurations to fit specific sites, contact the StormTech Technical Services Department or your local StormTech representative.

1) Determine the amount of storage volume (V_S) required. It is the design engineer's sole responsibility to determine the storage volume required.

TABLE 13 – Storage Volume Per Chamber/End Cap ft³ (m³)

MC-4500	Bare Unit Storage ft³ (m³)	Chamber/End Cap and Stone Volume — Stone Foundation Depth in. (mm)			
		9" (229 mm)	12" (305 mm)	15" (381 mm)	18" (457 mm)
Chamber	106.5 (3.01)	162.6 (4.60)	166.3 (4.71)	169.9 (4.81)	173.6 (4.91)
End Cap	35.7 (1.01)	108.7 (3.08)	111.9 (3.17)	115.2 (3.26)	118.4 (3.35)

NOTE: Assumes 40% porosity for the stone plus the chamber/end cap volume. End cap volume assumes 12" (305 mm) stone perimeter.

2) Determine the number of chambers (C) required. To calculate the number of chambers required for adequate storage, divide the storage volume (Vs) by the storage volume of the chamber (from **Table 13**), as follows: **C = Vs / Storage Volume per Chamber**

3) Determine the number of end caps required. The number of end caps (EC) required depends on the number of rows required by the project. Once the number of chamber rows is determined, multiply the number of chamber rows by 2 to determine the number of end caps required. **EC = No. of Chamber Rows x 2**

NOTE: Additional end caps may be required for systems having inlet locations within the chamber bed.

4) Determine additional storage provided by end caps. End Caps will provide additional storage to the project. Multiply the number of end caps (EC) by the storage volume per end cap (ECs) to determine the additional storage (As) provided by the end caps. **As = EC x ECs**

5) Adjust number of chambers (C) to account for additional end cap storage (As). The original number of chambers (C) can now be reduced due to the additional storage in the end caps. Divide the additional storage (As) by the storage volume per chamber to determine the number of chambers that can be removed. **Number of chambers to remove = As/ volume per chamber**

NOTE: Additional storage exists in the stone perimeter as well as in the inlet and outlet manifold systems. Contact StormTech's Technical Services Department for assistance with determining the number of chambers and end caps required for your project.

6) Determine the required bed size (S). The size of the bed will depend on the number of chambers and end caps required:
MC-4500 area per chamber = 36.6 ft² (3.4 m²)
MC-4500 area per end cap = 23.2 ft² (2.2 m²)

S = (C x area per chamber) + (EC x area per end cap)

NOTE: It is necessary to add 12" (305 mm) of stone perimeter parallel to the chamber rows and 12" (305 mm) of stone perimeter from the base of all end caps. The additional area due to perimeter stone is not included in the area numbers above.

7) Determine the amount of stone (V_{St}) required. To calculate the total amount of clean, crushed, angular stone required, multiply the number of chambers (C) and the number of end caps (EC) by the selected weight of stone from **Table 14.**

NOTE: Clean, crushed, angular stone is also required around the perimeter of the system.

TABLE 14 – Amount of Stone Per Chamber/End Cap

ENGLISH tons (yds³)	Stone Foundation Depth			
	9"	12"	15"	18"
MC-4500	7.4 (5.2)	7.8 (5.5)	8.3 (5.9)	8.8 (6.2)
End Cap	9.6 (6.8)	10.0 (7.1)	10.4 (7.4)	10.9 (7.7)
METRIC kg (m³)	**229 mm**	**305 mm**	**381 mm**	**457 mm**
MC-4500	6681 (4.0)	7117 (4.2)	7552 (4.5)	7987 (4.7)
End Cap	8691 (5.2)	9075 (5.4)	9460 (5.6)	9845 (5.9)

NOTE: Assumes 12" (305 mm) of stone above, 9" (229 mm) row spacing, and 12" (305 mm) of perimeter stone in front of end caps.

8) Determine the volume of excavation (Ex) required. Each additional foot of cover will add a volume of excavation of 1.4 yd³ (1.0 m³) per MC-4500 chamber and 1.2 yd³ (0.9 m³) per MC-4500 end cap.

TABLE 15 – Volume of Excavation Per Chamber/End Cap in yd³ (m³)

	Stone Foundation Depth			
	9" (229 mm)	12" (305 mm)	15" (381 mm)	18" (457 mm)
MC-4500	10.5 (8.0)	10.8 (8.3)	11.2 (8.5)	11.5 (8.8)
End Cap	9.3 (7.1)	9.6 (7.3)	9.9 (7.6)	10.2 (7.8)

NOTE: Assumes 9" (229 mm) of separation between chamber rows, 12" (305 mm) of perimeter in front of end caps, and 24" (610 mm) of cover. The volume of excavation will vary as the depth of cover increases.

9) Determine the area of geotextile (F) required. The bottom, top and sides of the bed must be covered with a non-woven geotextile (filter fabric) that meets AASHTO M288 Class 2 requirements. The area of the sidewalls must be calculated and a 24" (610 mm) overlap must be included for all seams. Geotextiles typically come in 15 foot (4.57 m) wide rolls.

7.0 Structural Cross Sections and Specifications

Figure 15 – MC-3500 Structural Cross Section Detail – (not to scale)

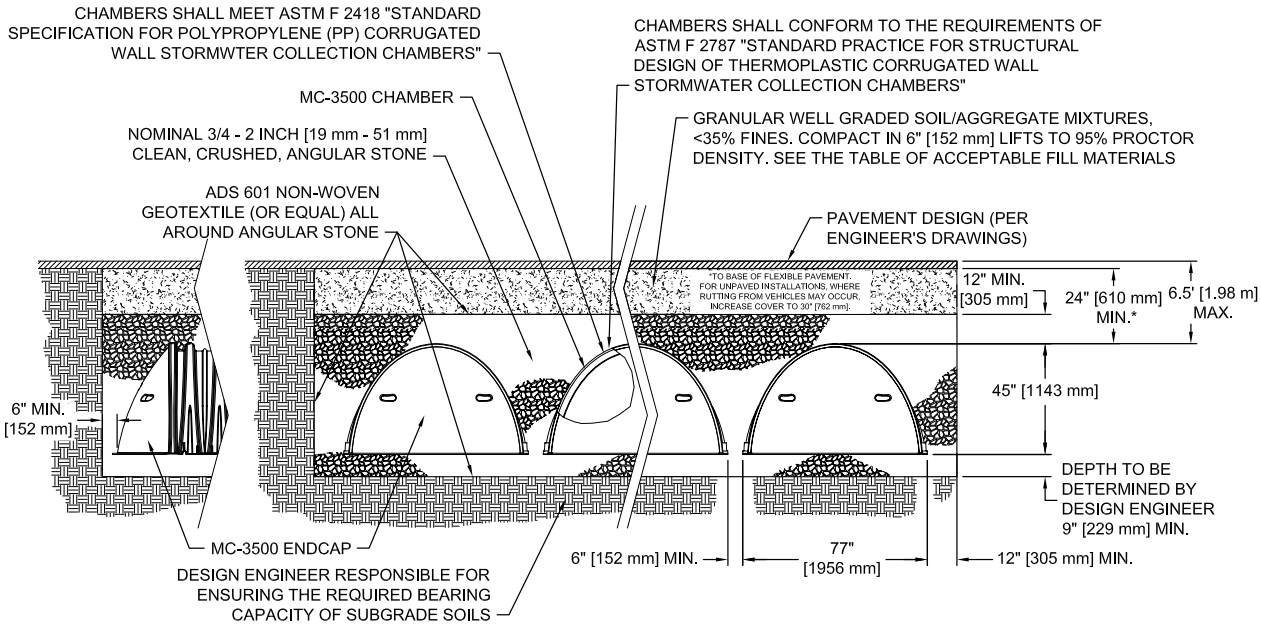

MC-3500 STORMWATER CHAMBER SPECIFICATIONS:

1. Chambers shall be StormTech MC-3500 or approved equal.
2. Chambers shall be made from virgin, impact-modified polypropylene copolymers.
3. Chamber rows shall provide continuous, unobstructed internal space with no internal panels that would impede flow.
4. The structural design of the chambers, the structural backfill and the installation requirements shall ensure that the load factors specified in the AASHTO LRFD Bridge Design Specifications, Section 12.12 are met for: 1) long-duration dead loads and 2) short-duration live loads, based on the AASHTO Design Truck with consideration for impact and multiple vehicle presences.
5. Chambers shall conform to the requirements of ASTM F 2418, "Standard Specification for Polypropylene (PP) Corrugated Wall Stormwater Collection Chambers."
6. Chambers shall conform to the requirements of ASTM F 2787, "Standard Practice for Structural Design of Thermoplastic Corrugated Wall Stormwater Collection Chambers."
7. Only chambers that are approved by the engineer will be allowed. The contractor shall submit (3 sets) of the following to the engineer for approval before delivering chambers to the project site:
   - A structural evaluation by a registered structural engineer that demonstrates that the load factors specified in the AASHTO LRFD Bridge Design Specifications, Section 12.12 are met. The 50-year creep modulus data specified in ASTM F 2418 must be used as part of the AASHTO structural evaluation to verify long-term performance
   - Structural cross section detail on which the structural cross section is based.
8. The installation of chambers shall be in accordance with the manufacturer's latest Installation Instructions.

Detail drawings available in AutoCad Rev. 2000 format at www.stormtech.com.

7.0 Structural Cross Sections and Specifications

Figure 16 – MC-4500 Structural Cross Section Detail – (not to scale)

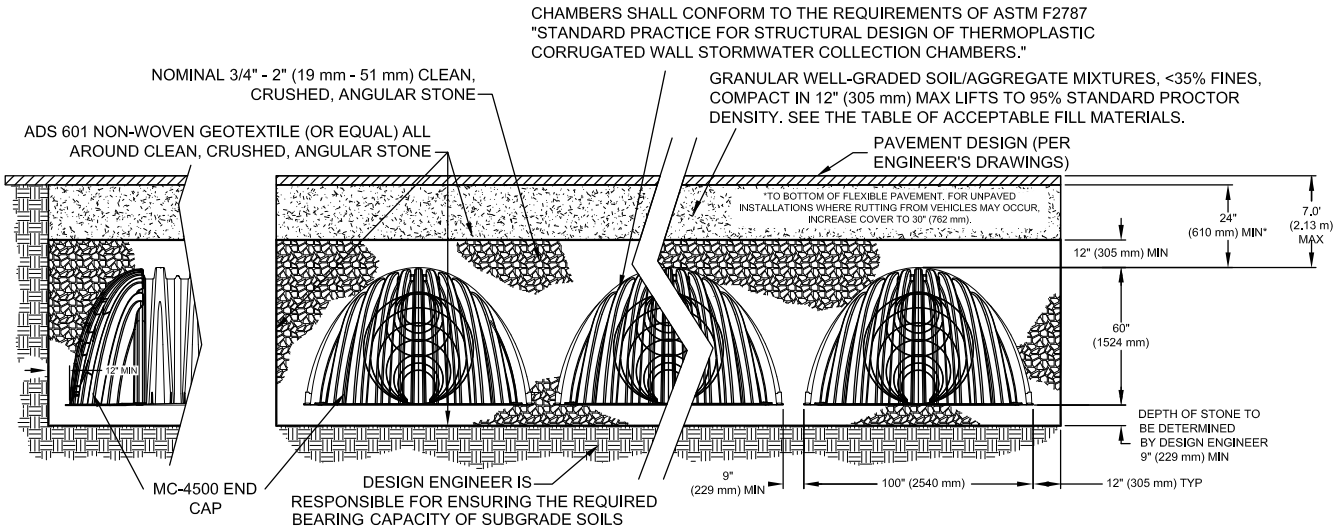

THE INSTALLED CHAMBER SYSTEM SHALL PROVIDE THE LOAD FACTORS SPECIFIED IN THE AASHTO LRFD BRIDGE DESIGN SPECIFICATIONS SECTION 12.12 FOR EARTH AND LIVE LOADS, WITH CONSIDERATION FOR IMPACT AND MULTIPLE VEHICLE PRESENCES.

MC-4500 STORMWATER CHAMBER SPECIFICATIONS:

1. Chambers shall be StormTech MC-4500 or approved equal
2. Chambers shall be made from virgin, impact-modified polypropylene copolymers.
3. Chamber rows shall provide continuous, unobstructed internal space with no internal panels that would impede flow.
4. The structural design of the chambers, the structural backfill and the installation requirements shall ensure that the load factors specified in the AASHTO LRFD Bridge Design Specifications, Section 12.12 are met for: 1) long-duration dead loads and 2) short duration live loads, based on the AASHTO Design Truck with consideration for impact and multiple vehicle presences.
5. Chambers shall conform to the requirements of ASTM F 2787, “Standard Practice for Structural Design of Thermoplastic Corrugated Wall Stormwater Chambers.”
6. Only chambers that are approved by the engineer will be allowed. The contractor shall submit (3 sets) of the following to the engineer for approval before delivering chambers to the project site:
   - A structural evaluation by a registered structural engineer that demonstrates that the load factors specified in the AASHTO LRFD Bridge Design Specifications, Section 12.12 are met.
   - Structural cross section detail on which the structural cross section is based.
7. The installation of chambers shall be in accordance with the manufacturer’s latest Installation Instructions.

Detail drawings available in AutoCad Rev. 2000 format at www.stormtech.com.

8.0 General Notes

1. StormTech ("StormTech") requires installing contractors to use and understand the latest **StormTech MC-3500 and MC-4500 Construction Guide** prior to beginning system installation.
2. StormTech offers installation consultations to installing contractors. Contact our Technical Service Department or local StormTech representative at least 30 days prior to system installation to arrange a pre-installation consultation. Our representatives can then answer questions or address comments on the StormTech chamber system and inform the Installing contractor of the minimum installation requirements before beginning the system's construction. Call 860-529-8188 to speak to a Technical Service Representative or visit www.stormtech.com to receive a copy of our Construction Guide.
3. StormTech requirements for systems with pavement design (asphalt, concrete pavers, etc.): Minimum cover is 24" (610 mm) not including pavement; MC-3500 maximum cover is 6.5' (1.98 m) and MC-4500 maximum cover is 7.0' (2.13 m) both including pavement. For installations that do not include pavement, where rutting from vehicles may occur, minimum required cover is increased to 30" (762 mm).
4. The contractor must report any discrepancies with the bearing capacity of the subgrade materials to the design engineer.
5. AASHTO M288 Class 2 non-woven geotextile (ADS601 or equal) (filter fabric) must be used as indicated in the project plans.
6. Stone placement between chamber rows and around perimeter must follow instructions as indicated in the most current version of StormTech MC-3500 / MC-4500 Construction Guide.
7. Backfilling over the chambers must follow requirements as indicated in the most current version of StormTech MC-3500 / MC-4500 Construction Guide.
8. The contractor must refer to StormTech MC-3500 / MC-4500 Construction Guide for a Table of Acceptable Vehicle Loads at various depths of cover. This information is also available at the StormTech website: www.stormtech.com. The contractor is responsible for preventing vehicles that exceed StormTech requirements from traveling across or parking over the stormwater system. Temporary fencing, warning tape and appropriately located signs are commonly used to prevent unauthorized vehicles from entering sensitive construction areas.
9. The contractor must apply erosion and sediment control measures to protect the stormwater system during all phases of site construction per local codes and design engineer's specifications.
10. STORMTECH PRODUCT WARRANTY IS LIMITED. Contact StormTech for warranty information.

13.1 ISOLATOR™ ROW INSPECTION

Regular inspection and maintenance are essential to assure a properly functioning stormwater system. Inspection is easily accomplished through the manhole or optional inspection ports of an Isolator Row. Please follow local and OSHA rules for a confined space entry.

Inspection ports can allow inspection to be accomplished completely from the surface without the need for a confined space entry. Inspection ports provide visual access to the system with the use of a flashlight. A stadia rod may be inserted to determine the depth of sediment. If upon visual inspection it is found that sediment has accumulated to an average depth exceeding 3" (76 mm), cleanout is required.

A StormTech Isolator Row should initially be inspected immediately after completion of the site's construction. While every effort should be made to prevent sediment from entering the system during construction, it is during this time that excess amounts of sediments are most likely to enter any stormwater system. Inspection and maintenance, if necessary, should be performed prior to passing responsibility over to the site's owner. Once in normal service, a StormTech Isolator Row should be inspected bi-annually until an understanding of the sites characteristics is developed. The site's maintenance manager can then revise the inspection schedule based on experience or local requirements.

13.2 ISOLATOR ROW MAINTENANCE

JetVac maintenance is recommended if sediment has been collected to an average depth of 3" (76 mm) inside the Isolator Row. More frequent maintenance may be required to maintain minimum flow rates through the Isolator Row. The JetVac process utilizes a high pressure water nozzle to propel itself down the Isolator Row while scouring and suspending sediments. As the nozzle is retrieved, a wave of suspended sediments is flushed back into the manhole for vacuuming. Most sewer and pipe maintenance companies have vacuum/ JetVac combination vehicles. Fixed nozzles designed for culverts or large diameter pipe cleaning are preferable. Rear facing jets with an effective spread of at least 45" (1143 mm) are best. The JetVac process shall only be performed on StormTech Rows that have AASHTO class 1 woven geotextile over their foundation stone (ADS 315ST or equal).

Looking down the Isolator Row.

A typical JetVac truck. (This is not a StormTech product.)

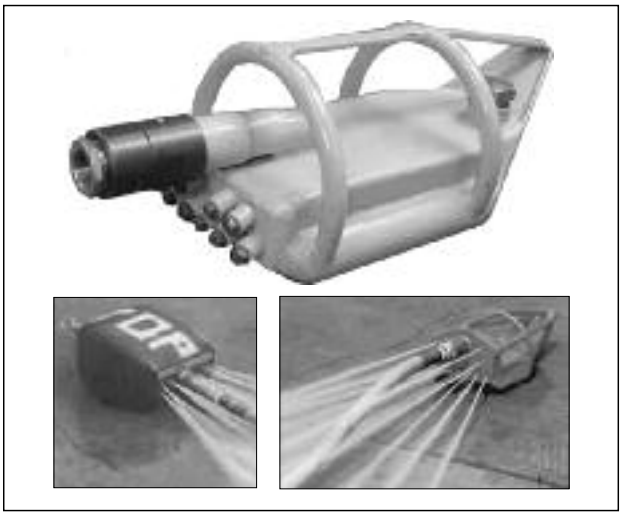

Examples of culvert cleaning nozzles appropriate for Isolator Row maintenance. (These are not StormTech products.)

A Family of Products and Services for the Stormwater Industry:

- MC-3500 and MC-4500 Chambers and End Caps
- SC-310 and SC-740 Chambers and End Caps
- DC-780 Chambers and End Caps
- Fabricated End Caps
- Fabricated Manifold Fittings
- Patented Isolator Row for Maintenance and Water Quality
- Chamber Separation Spacers
- In-House System Layout Assistance
- On-Site Educational Seminars
- Worldwide Technical Sales Group
- Centralized Product Applications Department
- Research and Development Team
- Technical Literature, O&M Manuals and Detailed CAD drawings all downloadable via our Web Site

StormTech provides state of the art products and services that meet or exceed industry performance standards and expectations. We offer designers, regulators, owners and contractors the highest quality products and services for stormwater management that "Saves Valuable Land and Protects Water Resources."

Please contact one of our inside project application professionals or Regional Product Managers (RPMs) to discuss your particular application. A wide variety of technical support material is available in print, electronic media or from our website at www.stormtech.com. For any questions, please call StormTech at 888-892-2694.

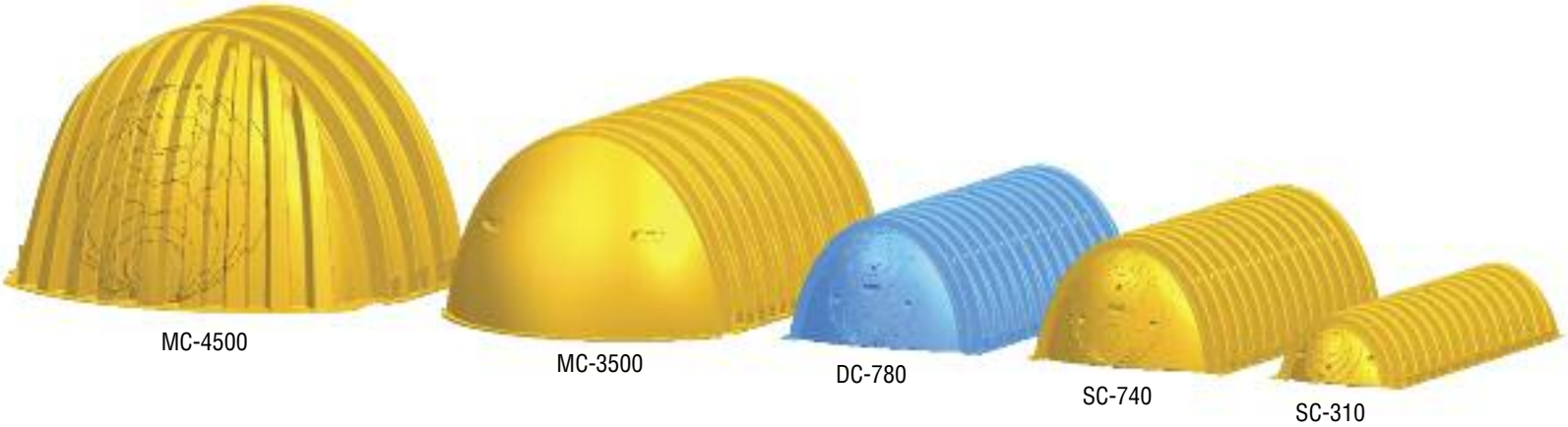

StormTech®
Detention • Retention • Water Quality
A division of ADS

20 Beaver Road, Suite 104 | Wethersfield | Connecticut | 06109
860.529.8188 | 888.892.2694 | fax 866.328.8401 | fax 860.529.8040 | www.stormtech.com

www.stormtech.com

*Advanced Drainage Systems, the ADS logo, the green stripe, are registered trademarks of Advanced Drainage Systems. Green Building Council Member logo is a registered trademark of the U.S. Green Building Council. ADS "Terms and Conditions of Sale" are available on the ADS website, www.ads-pipe.com

StormTech products are covered by one or more of the following patents: U.S. Patents: 5,401,459; 5,511,903; 5,716,163; 5,588,778; 5,839,844; Canadian Patents: 2,158,418 Other U.S. and Foreign Patents Pending

Printed in U.S.A. © 2011. All rights reserved. StormTech, Inc.

S250211