Stormceptor® STC

Technical Manual

Rinker MATERIALS™

Stormceptor Design Notes

- Only the STC 450i is adaptable to function with a catch basin inlet and/or inline pipes.
- Only the Stormceptor models STC 450i to STC 7200 may accommodate multiple inlet pipes.

Inlet and outlet invert elevation differences are as follows:

Inlet and Outlet Pipe Invert Elevations Differences			
Inlet Pipe Configuration	STC 450i	STC 900 to STC 7200	STC 11000 to STC 16000
Single inlet pipe	3 in. (75 mm)	1 in. (25 mm)	3 in. (75 mm)
Multiple inlet pipes	3 in. (75 mm)	3 in. (75 mm)	Only one inlet pipe.

Maximum inlet and outlet pipe diameters:

Inlet/Outlet Configuration	**Inlet Unit** STC 450i	**In-Line Unit** STC 900 to STC 7200	**Series*** STC 11000 to STC 16000
Straight Through	24 inch (600 mm)	42 inch (1050 mm)	60 inch (1500 mm)
Bend (90 degrees)	18 inch (450 mm)	33 inch (825 mm)	33 inch (825 mm)

- The inlet and in-line Stormceptor units can accommodate turns to a maximum of 90 degrees.
- Minimum distance from top of grade to crown is 2 feet (0.6 m)
- Submerged conditions. A unit is submerged when the standing water elevation at the proposed location of the Stormceptor unit is greater than the outlet invert elevation during zero flow conditions. In these cases, please contact your local Stormceptor representative and provide the following information:
  - Top of grade elevation
  - Stormceptor inlet and outlet pipe diameters and invert elevations
  - Standing water elevation
- Stormceptor head loss, K = 1.3 (for submerged condition, K = 4)

For technical assistance and pricing, please contact:

Rinker Materials – Concrete Pipe Division

Tel: 800-909-7763
www.rinkerstormceptor.com

Stormceptor® STC

Design Worksheet

PROJECT INFORMATION

Date:		Total Drainage Area:		acres	
Project Number:		Impervious		%	
Project Name:		Upstream Quantity Control (A2):	YES		NO
City/Town:		Is the unit submerged (C4):	YES		NO
Development Type:		Describe Land Cover:			
Province:		Describe Land Use:			

A. DESIGN FOR TOTAL SUSPENDED SOLIDS REMOVAL

Units are sized for TSS removal. All units are designed for spills capture for hydrocarbon with a specific gravity of 0.86.

A1. Identify Water Quality Objective:

Desired Water Quality Objective:		% Annual TSS Removal

A2. If upstream quantity control exists, identify stage storage and discharge information:

	Elevation (ft)	Storage (acre-feet)	Discharge (ft^3/s)
Permanent Water Level			
5 year			
10 year			
25 year			
100 year			

A3. Select Particle Size Distribution:

☐ Fine Distribution

Particle Size um	Distribution %
20	20
60	20
150	20
400	20
2000	20

☐ Coarse Distribution

Particle Size um	Distribution %
150	60
400	20
2000	20

☐ User Defined Particle Size Distribution
Identify particle size distribution
(please contact your local Stormceptor representative)

Particle Size um	Distribution %	Specific Gravity

A4. Enter all parameters from items A1 to A3 into the PCSWMM for Stormceptor to select the model that meets the water quality objective.

SUMMARY OF STORMCEPTOR REQUIREMENTS FOR TSS REMOVAL

Stormceptor Model:		
Annual TSS Removed:		%
Annual Runoff Captured:		%

B. STORMCEPTOR SITING CONSIDERATIONS

B1. Difference Between Inlet and Outlet Invert Elevations:

Number of Inlet Pipes	Inlet Unit STC 450	In-line STC 900 to STC 7200	Series STC 11000 to STC 16000
One	3 inches	1 inch	3 inches
>1	3 inches	3 inches	N/A

B2. Other considerations:

Minimum Distance From Top of Grade to Invert Elevation	4 feet
Bends:	The inlet and in-line Stormceptor units can accommodate turns to a maximum of 90 degrees
Multiple Inlet Pipe:	Yes for Inlet and In-Line Stormceptor Units. Please contact your local affiliate for more details
Inlet Covers	Only the STC 450 can accommodate a catch basin frame and cover.

B3. Standard maximum inlet and outlet pipe diameters:

Inlet/Outlet Configuration	Inlet Unit STC 450	In-line STC 900 to STC 7200	Series STC 11000 to STC 16000
Straight Through	24 inch	42 inch	96 inch
Bend	18 inch	33 inch	42 inch

Please contact your local Stormceptor representative for larger pipe diameters.

B4. Submerged conditions:
A unit is submerged when the standing water elevation at the proposed location of the Stormceptor unit is greater than the outlet invert elevation during zero flow conditions. In these cases, please contact your local Stormceptor representative for further assistance.

STORMCEPTOR® QUOTATION AND ORDER FORM

Quotation No: _____

Date: _____

Project Information:

Project Number: _____

Project Name: _____

Closing Date: _____

Jobsite Address: _____

Municipality: _____

Contractor Information

Contact Name: _____

Company: _____

Phone No: _____

Fax No: _____

E-mail: _____

Consultant Information:

Contact Name: _____

Company: _____

Phone No: _____

Fax No: _____

E-mail:

Owner Information (Required for Maintenance):

Contact Name: _____

Company: _____

Phone No: _____

Fax No: _____

E-mail:

Land Use (Check one):

□ Commercial □ Gas Station □ Government □ Industrial □ Military

□ Street □ Residential □ Transportation □ Other _____

STORMCEPTOR INFORMATION

Structure No.: _____ _____

Top of Grate Elev.: _____ _____

Outlet Invert Elev.: _____ Outlet Pipe Material: _____

Inlet invert Elev.: _____ Inlet Pipe Material: _____

STORMCEPTOR MODEL REQUIRED (circle model number)

INLET SYSTEM	IN-LINE SYSTEM			SERIES SYSTEM	
STC 450	STC 900	STC 1200	STC 1800	STC 11000	STC 16000
	STC 2400	STC 3600	STC 4800	STC 13000	
	STC 6000	STC 7200			

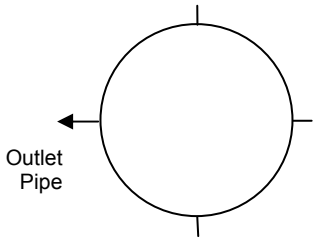

Show Orientation of Inlet Pipe

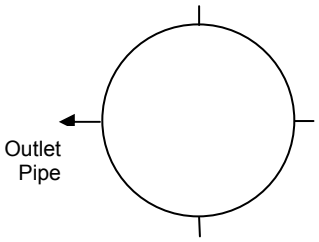

Show Orientation of Inlet Pipe

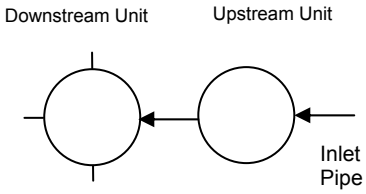

Show Orientation of Outlet Pipe on Downstream Unit

Please complete the attached form and fax to your local Stormceptor representative
www.rinkerstormceptor.com

Table of Content

1. About Stormceptor 1
1.1. Distribution Network 1
1.2. Patent Information 2
1.3. Contact Imbrium Systems 2
2. Stormceptor Design Overview 2
2.1. Design Philosophy 2
2.2. Benefits 3
2.3. Environmental Benefit 3
3. Key Operation Features 4
3.1. Scour Prevention 4
3.2. Operational Hydraulic Loading Rate 4
3.3. Double Wall Containment 5
4. Stormceptor Product Line 5
4.1. Stormceptor Models 5
4.2. Inline Stormceptor 5
4.3. Inlet Stormceptor 6
4.4. Series Stormceptor 7
5. Sizing the Stormceptor System 8
5.1. PCSWMM for Stormceptor 10
5.2. Sediment Loading Characteristics 10
6. Spill Controls 11
6.1. Oil Level Alarm 11
6.2. Increased Volume Storage Capacity 12
7. Stormceptor Options 12
7.1. Installation Depth Minimum Cover 12
7.2. Maximum Inlet and Outlet Pipe Diameters 12
7.3. Bends 13
7.4. Multiple Inlet Pipes 14
7.5. Inlet/Outlet Pipe Invert Elevations 15
7.6. Shallow Stormceptor 15
7.7. Customized Live Load 15
7.8. Pre-treatment 15
7.9. Head loss 15
7.10. Submerged 15
8. Comparing Technologies 17
8.1. Particle Size Distribution (PSD) 17
8.2. Scour Prevention 17
8.3. Hydraulics 17
8.4. Hydrology 18
9. Testing 18
10. Installation 19
10.1. Excavation 19
10.2. Backfilling 19
11. Stormceptor Construction Sequence 20
12. Maintenance 20
12.1. Health and Safety 20
12.2. Maintenance Procedures 20
12.3. Submerged Stormceptor 21
12.4. Hydrocarbon Spills 22
12.5. Disposal 22
12.6. Oil Sheens 22

1. About Stormceptor

The Stormceptor® STC (Standard Treatment Cell) was developed by Imbrium™ Systems to address the growing need to remove and isolate pollution from the storm drain system before it enters the environment. The Stormceptor STC targets hydrocarbons and total suspended solids (TSS) in stormwater runoff. It improves water quality by removing contaminants through the gravitational settling of fine sediments and floatation of hydrocarbons while preventing the re-suspension or scour of previously captured pollutants.

The development of the Stormceptor STC revolutionized stormwater treatment, and created an entirely new category of environmental technology. Protecting thousands of waterways around the world, the Stormceptor System has set the standard for effective stormwater treatment.

1.1. Distribution Network

Imbrium Systems has partnered with a global network of affiliates who manufacture and distribute the Stormceptor System. In the United States contact Rinker Materials for additional information concerning the Stormceptor System.

United States

Rinker Materials – Concrete Pipe Division
6560 Langfield Road
Building 3
Houston TX 77092

Toll Free: 800 909 7763
Fax: 832 590 5399
www.rinkerstormceptor.com

1.2. Patent Information

The Stormceptor technology is protected by the following patents:

- **Australia Patent No**. 693,164 • 693,164 • 707,133 • 729,096 • 779401
- **Austrian Patent No**. 289647
- **Canadian Patent No** 2,009,208 •2,137,942 • 2,175,277 • 2,180,305 • 2,180,383 • 2,206,338 • 2,327,768 (Pending)
- **China Patent No** 1168439
- **Denmark** DK 711879
- **German** DE 69534021
- **Indonesian Patent No** 16688
- **Japan Patent No** 9-11476 (Pending)
- **Korea** 10-2000-0026101 (Pending)
- **Malaysia Patent No** PI9701737 (Pending)
- **New Zealand Patent No** 314646
- **United States Patent No** 4,985,148 • 5,498,331 • 5,725,760 • 5,753,115 • 5,849,181 • 6,068,765 • 6,371,690
- **Stormceptor OSR** Patent Pending • **Stormceptor LCS** Patent Pending

1.3. Contact Imbrium Systems

Contact us today if you require more information on other products:

Imbrium Systems Corp.
9420 Key West Avenue
Suite 140
Rockville, MD 20850

T 888 279 8826
info@imbriumsystems.com
www.imbriumsystems.com

2. Stormceptor Design Overview

2.1. Design Philosophy

The patented Stormceptor System has been designed to focus on the environmental objective of providing long-term pollution control. The unique and innovative Stormceptor design allows for continuous positive treatment of runoff during all rainfall events, while ensuring that all captured pollutants are retained within the system, even during intense storm events.

An integral part of the Stormceptor design is PCSWMM for Stormceptor - sizing software developed in conjunction with Computational Hydraulics Inc. (CHI) and internationally acclaimed expert, Dr. Bill James. Using local historical rainfall data and continuous simulation modeling, this software allows a Stormceptor unit to be designed for each individual site and the corresponding water quality objectives.

By using PCSWMM for Stormceptor, the Stormceptor System can be designed to remove a wide range of particles (typically from 20 to 2,000 microns), and can also be customized to remove a specific particle size distribution (PSD). The specified PSD should accurately reflect what is in the stormwater runoff to ensure the device is achieving the desired water quality objective. Since stormwater runoff contains small particles (less than 75 microns), it is important to design a treatment system to remove smaller particles in addition to coarse particles.

2.2. Benefits

The Stormceptor System removes free oil and suspended solids from stormwater, preventing spills and non-point source pollution from entering downstream lakes and rivers. The key benefits, capabilities and applications of the Stormceptor System are as follows:

- Provides continuous positive treatment during all rainfall events
- Can be designed to remove over 80% of the annual sediment load
- Removes a wide range of particles
- Can be designed to remove a specific particle size distribution (PSD)
- Captures free oil from stormwater
- Prevents scouring or re-suspension of trapped pollutants
- Pre-treatment to reduce maintenance costs for downstream treatment measures (ponds, swales, detention basins, filters)
- Groundwater recharge protection
- Spills capture and mitigation
- Simple to design and specify
- Designed to your local watershed conditions
- Small footprint to allow for easy retrofit installations
- Easy to maintain (vacuum truck)
- Multiple inlets can connect to a single unit
- Suitable as a bend structure
- Pre-engineered for traffic loading (minimum AASHTO HS-20)
- Minimal elevation drop between inlet and outlet pipes
- Small head loss
- Additional protection provided by an 18” (457 mm) fiberglass skirt below the top of the insert, for the containment of hydrocarbons in the event of a spill.

2.3. Environmental Benefit

Freshwater resources are vital to the health and welfare of their surrounding communities. There is increasing public awareness, government regulations and corporate commitment to reducing the pollution entering our waterways. A major source of this pollution originates from stormwater runoff from urban areas. Rainfall runoff carries oils, sediment and other contaminants from roads and parking lots discharging directly into our streams, lakes and coastal waterways.

The Stormceptor System is designed to isolate contaminants from getting into the natural environment. The Stormceptor technology provides protection for the environment from spills that occur at service stations and vehicle accident sites, while also removing contaminated sediment in runoff that washes from roads and parking lots.

3. Key Operation Features

3.1. Scour Prevention

A key feature of the Stormceptor System is its patented scour prevention technology. This innovation ensures pollutants are captured and retained during all rainfall events, even extreme storms. The Stormceptor System provides continuous positive treatment for all rainfall events, including intense storms. Stormceptor slows incoming runoff, controlling and reducing velocities in the lower chamber to create a non-turbulent environment that promotes free oils and floatable debris to rise and sediment to settle.

The patented scour prevention technology, the fiberglass insert, regulates flows into the lower chamber through a combination of a weir and orifice while diverting high energy flows away through the upper chamber to prevent scouring. Laboratory testing demonstrated no scouring when tested up to 125% of the unit's operating rate, with the unit loaded to 100% sediment capacity (NJDEP, 2005). Second, the depth of the lower chamber ensures the sediment storage zone is adequately separated from the path of flow in the lower chamber to prevent scouring.

3.2. Operational Hydraulic Loading Rate

Designers and regulators need to evaluate the treatment capacity and performance of manufactured stormwater treatment systems. A commonly used parameter is the "operational hydraulic loading rate" which originated as a design methodology for wastewater treatment devices.

Operational hydraulic loading rate may be calculated by dividing the flow rate into a device by its settling area. This represents the critical settling velocity that is the prime determinant to quantify the influent particle size and density captured by the device. PCSWMM for Stormceptor uses a similar parameter that is calculated by dividing the hydraulic detention time in the device by the fall distance of the sediment.

$$v_{SC} = \frac{H}{\theta_H} = \frac{Q}{A_S}$$

Where:

v_{SC} = critical settling velocity, ft/s (m/s)

H = tank depth, ft (m)

θ_H = hydraulic detention time, ft/s (m/s)

Q = volumetric flow rate, ft^3/s (m^3/s)

A_S = surface area, ft^2 (m^2)

(Tchobanoglous, G. and Schroeder, E.D. 1987. Water Quality. Addison Wesley.)

Unlike designing typical wastewater devices, stormwater systems are designed for highly variable flow rates including intense peak flows. PCSWMM for Stormceptor incorporates all of the flows into its calculations, ensuring that the operational hydraulic loading rate is considered not only for one flow rate, but for all flows including extreme events.

3.3. Double Wall Containment

The Stormceptor System was conceived as a pollution identifier to assist with identifying illicit discharges. The fiberglass insert has a continuous skirt that lines the concrete barrel wall for a depth of 18 inches (457 mm) that provides double wall containment for hydrocarbons storage. This protective barrier ensures that toxic floatables do not migrate through the concrete wall into the surrounding soils.

4. Stormceptor Product Line

4.1. Stormceptor Models

A summary of Stormceptor models and capacities are listed in Table 1.

Table 1. Stormceptor Models

Stormceptor Model	Total Storage Volume U.S. Gal (L)	Hydrocarbon Storage Capacity U.S. Gal (L)	Maximum Sediment Capacity ft^3 (L)
STC 450i	470 (1,780)	86 (330)	46 (1,302)
STC 900	952 (3,600)	251 (950)	89 (2,520)
STC 1200	1,234 (4,670)	251 (950)	127 (3,596)
STC 1800	1,833 (6,940)	251 (950)	207 (5,861)
STC 2400	2,462 (9,320)	840 (3,180)	205 (5,805)
STC 3600	3,715 (1,406)	840 (3,180)	373 (10,562)
STC 4800	5,059 (1,950)	909 (3,440)	543 (15,376)
STC 6000	6,136 (23,230)	909 (3,440)	687 (19,453)
STC 7200	7,420 (28,090)	1,059 (4,010)	839 (23,757)
STC 11000	11,194 (42,370)	2,797 (10, 590)	1,086 (30,752)
STC 13000	13,348 (50,530)	2,797 (10, 590)	1,374 (38,907)
STC 16000	15,918 (60,260)	3,055 (11, 560)	1,677 (47,487)

NOTE: Storage volumes may vary slightly from region to region. For detailed information, contact your local Stormceptor representative.

4.2. Inline Stormceptor

The Inline Stormceptor, Figure 1, is the standard design for most stormwater treatment applications. The patented Stormceptor design allows the Inline unit to maintain continuous positive treatment of total suspended solids (TSS) year-round, regardless of flow rate. The Inline Stormceptor is composed of a precast concrete tank with a fiberglass insert situated at the invert of the storm sewer pipe, creating an upper chamber above the insert and a lower chamber below the insert.

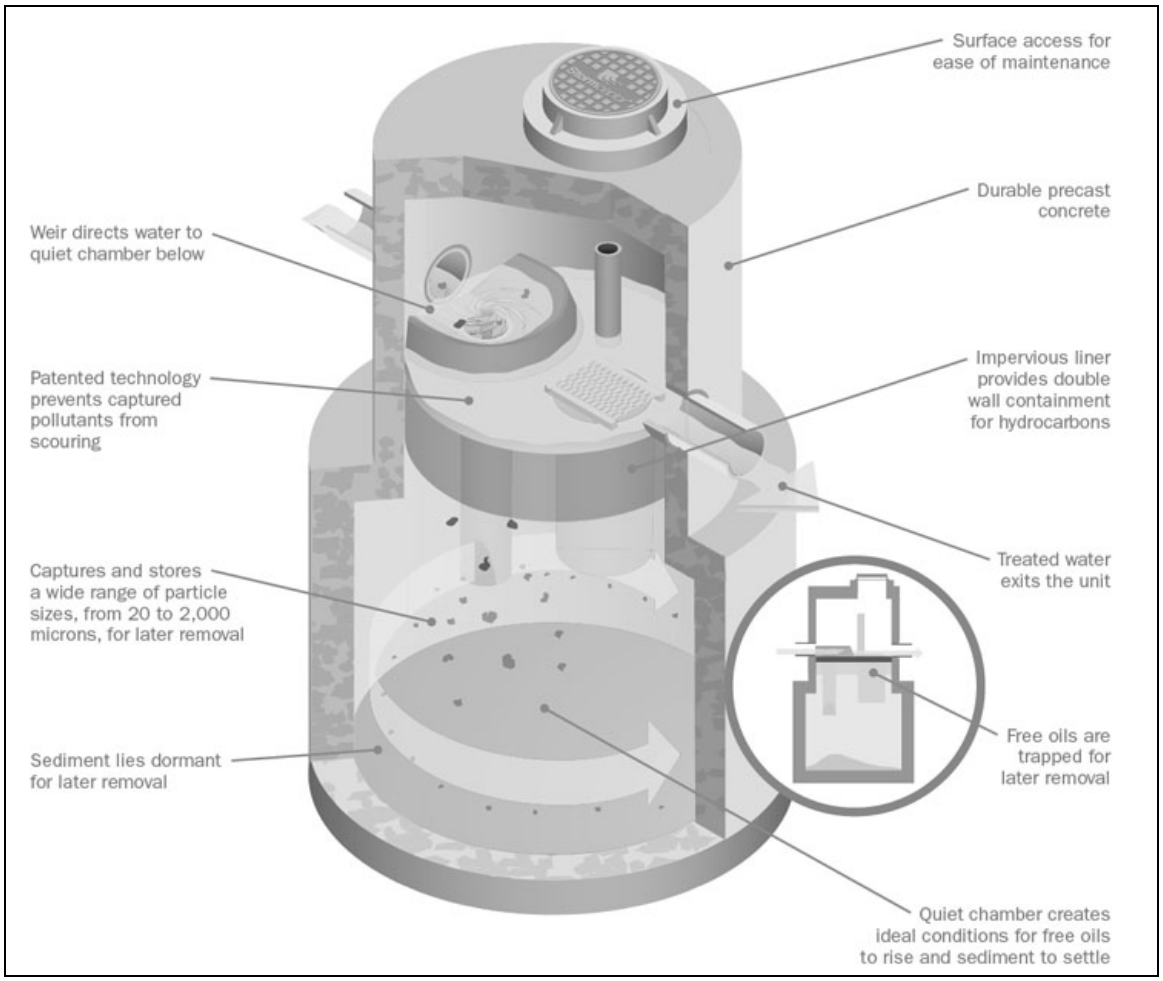

Figure 1. Inline Stormceptor

Operation

As water flows into the Stormceptor unit, it is slowed and directed to the lower chamber by a weir and drop tee. The stormwater enters the lower chamber, a non-turbulent environment, allowing free oils to rise and sediment to settle. The oil is captured underneath the fiberglass insert and shielded from exposure to the concrete walls by a fiberglass skirt. After the pollutants separate, treated water continues up a riser pipe, and exits the lower chamber on the downstream side of the weir before leaving the unit. During high flow events, the Stormceptor System's patented scour prevention technology ensures continuous pollutant removal and prevents re-suspension of previously captured pollutants.

4.3. Inlet Stormceptor

The Inlet Stormceptor System, Figure 2, was designed to provide protection for parking lots, loading bays, gas stations and other spill-prone areas. The Inlet Stormceptor is designed to remove sediment from stormwater introduced through a grated inlet, a storm sewer pipe, or both.

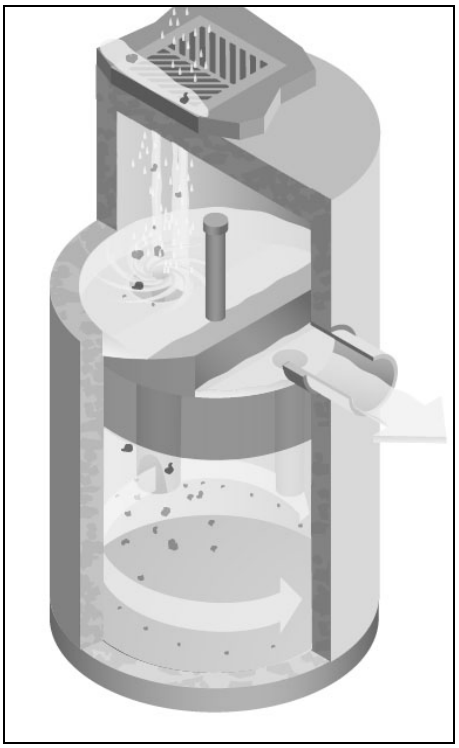

Figure 2. Inlet Stormceptor

The Inlet Stormceptor design operates in the same manner as the Inline unit, providing continuous positive treatment, and ensuring that captured material is not re-suspended.

4.4. Series Stormceptor

Designed to treat larger drainage areas, the Series Stormceptor System, Figure 3, consists of two adjacent Stormceptor models that function in parallel. This design eliminates the need for additional structures and piping to reduce installation costs.

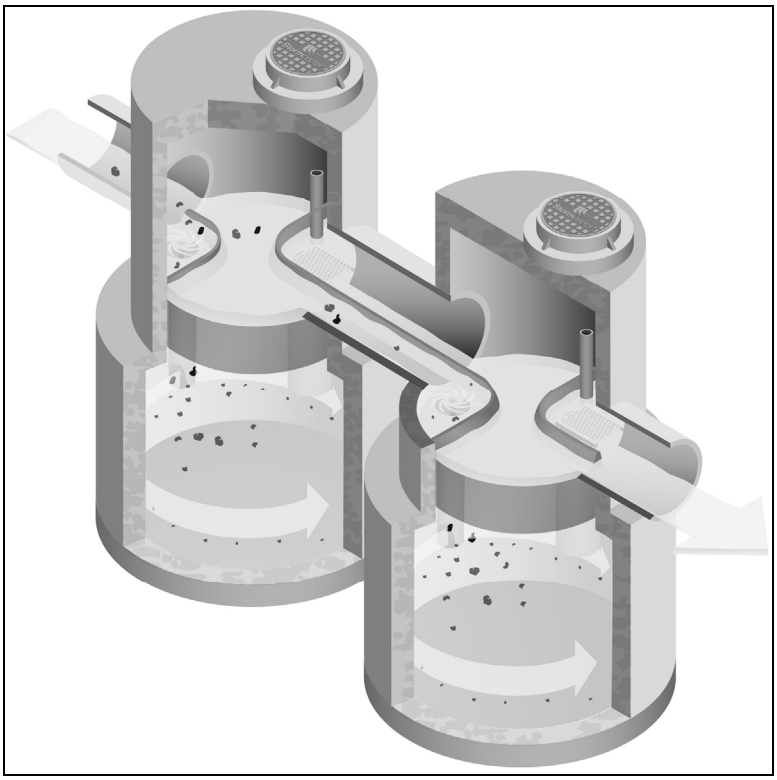

Figure 3. Series System

The Series Stormceptor design operates in the same manner as the Inline unit, providing continuous positive treatment, and ensuring that captured material is not re-suspended.

5. Sizing the Stormceptor System

The Stormceptor System is a versatile product that can be used for many different aspects of water quality improvement. While addressing these needs, there are conditions that the designer needs to be aware of in order to size the Stormceptor model to meet the demands of each individual site in an efficient and cost-effective manner.

PCSWMM for Stormceptor is the support tool used for identifying the appropriate Stormceptor model. In order to size a unit, it is recommended the user follow the seven design steps in the program. The steps are as follows:

STEP 1 – Project Details

The first step prior to sizing the Stormceptor System is to clearly identify the water quality objective for the development. It is recommended that a level of annual sediment (TSS) removal be identified and defined by a particle size distribution.

STEP 2 – Site Details

Identify the site development by the drainage area and the level of imperviousness. It is recommended that imperviousness be calculated based on the actual area of imperviousness based on paved surfaces, sidewalks and rooftops.

STEP 3 – Upstream Attenuation

The Stormceptor System is designed as a water quality device and is sometimes used in conjunction with onsite water quantity control devices such as ponds or underground detention systems. When possible, a greater benefit is typically achieved when installing a Stormceptor unit upstream of a detention facility. By placing the Stormceptor unit upstream of a detention structure, a benefit of less maintenance of the detention facility is realized.

STEP 4 – Particle Size Distribution

It is critical that the PSD be defined as part of the water quality objective. PSD is critical for the design of treatment system for a unit process of gravity settling and governs the size of a treatment system. A range of particle sizes has been provided and it is recommended that clays and silt-sized particles be considered in addition to sand and gravel-sized particles. Options and sample PSDs are provided in PCSWMM for Stormceptor. The default particle size distribution is the Fine Distribution, Table 2, option.

Table 2. Fine Distribution

Particle Size	Distribution	Specific Gravity
20	20%	1.3
60	20%	1.8
150	20%	2.2
400	20%	2.65
2000	20%	2.65

If the objective is the long-term removal of 80% of the total suspended solids on a given site, the PSD should be representative of the expected sediment on the site. For example, a system designed to remove 80% of coarse particles (greater than 75 microns) would provide relatively poor removal efficiency of finer particles that may be naturally prevalent in runoff from the site.

Since the small particle fraction contributes a disproportionately large amount of the total available particle surface area for pollutant adsorption, a system designed primarily for coarse particle capture will compromise water quality objectives.

STEP 5 – Rainfall Records

Local historical rainfall has been acquired from the U.S. National Oceanic and Atmospheric Administration, Environment Canada and regulatory agencies across North America. The rainfall data provided with PCSMM for Stormceptor provides an accurate estimation of small storm hydrology by modeling actual historical storm events including duration, intensities and peaks.

STEP 6 – Summary

At this point, the program may be executed to predict the level of TSS removal from the site. Once the simulation has completed, a table shall be generated identifying the TSS removal of each Stormceptor unit.

Step 7 – Sizing Summary

Performance estimates of all Stormceptor units for the given site parameters will be displayed in a tabular format. The unit that meets the water quality objective, identified in Step 1, will be highlighted.

5.1. PCSWMM for Stormceptor

The Stormceptor System has been developed in conjunction with PCSWMM for Stormceptor as a technological solution to achieve water quality goals. Together, these two innovations model, simulate, predict and calculate the water quality objectives desired by a design engineer for TSS removal.

PCSWMM for Stormceptor is a proprietary sizing program which uses site specific inputs to a computer model to simulate sediment accumulation, hydrology and long-term total suspended solids removal. The model has been calibrated to field monitoring results from Stormceptor units that have been monitored in North America. The sizing methodology can be described by three processes:

1. Determination of real time hydrology
2. Buildup and wash off of TSS from impervious land areas
3. TSS transport through the Stormceptor (settling and discharge). The use of a calibrated model is the preferred method for sizing stormwater quality structures for the following reasons:
   a. The hydrology of the local area is properly and **accurately** incorporated in the sizing (distribution of flows, flow rate ranges and peaks, back-to-back storms, inter-event times)
   b. The distribution of TSS with the hydrology is properly and **accurately** considered in the sizing
   c. Particle size distribution is properly considered in the sizing
   d. The sizing can be optimized for TSS removal
   e. The cost benefit of alternate TSS removal criteria can be easily assessed
   f. The program assesses the performance of all Stormceptor models. Sizing may be selected based on a specific water quality outcome or based on the Maximum Extent Practicable

For more information regarding PCSWMM for Stormceptor, contact your local Stormceptor representative, or visit **www.imbriumsystems.com** to download a free copy of the program.

5.2. Sediment Loading Characteristics

The way in which sediment is transferred to stormwater can have a considerable effect on which type of system is implemented. On typical impervious surfaces (e.g. parking lots) sediment will build over time and wash off with the next rainfall. When rainfall patterns are

examined, a short intense storm will have a higher concentration of sediment than a long slow drizzle. Together with rainfall data representing the site's typical rainfall patterns, sediment loading characteristics play a part in the correct sizing of a stormwater quality device.

Typical Sites

For standard site design of the Stormceptor System, PCSWMM for Stormceptor is utilized to accurately assess the unit's performance. As an integral part of the product's design, the program can be used to meet local requirements for total suspended solid removal. Typical installations of manufactured stormwater treatment devices would occur on areas such as paved parking lots or paved roads. These are considered "stable" surfaces which have non – erodible surfaces.

Unstable Sites

While standard sites consist of stable concrete or asphalt surfaces, sites such as gravel parking lots, or maintenance yards with stockpiles of sediment would be classified as "unstable". These types of sites do not exhibit first flush characteristics, are highly erodible and exhibit atypical sediment loading characteristics and must therefore be sized more carefully. Contact your local Stormceptor representative for assistance in selecting a proper unit sized for such unstable sites.

6. Spill Controls

When considering the removal of total petroleum hydrocarbons (TPH) from a storm sewer system there are two functions of the system: oil removal, and spill capture.

'Oil Removal' describes the capture of the minute volumes of free oil mobilized from impervious surfaces. In this instance relatively low concentrations, volumes and flow rates are considered. While the Stormceptor unit will still provide an appreciable oil removal function during higher flow events and/or with higher TPH concentrations, desired effluent limits may be exceeded under these conditions.

'Spill Capture' describes a manner of TPH removal more appropriate to recovery of a relatively high volume of a single phase deleterious liquid that is introduced to the storm sewer system over a relatively short duration. The two design criteria involved when considering this manner of introduction are overall volume and the specific gravity of the material. A standard Stormceptor unit will be able to capture and retain a maximum spill volume and a minimum specific gravity.

For spill characteristics that fall outside these limits, unit modifications are required. Contact your local Stormceptor Representative for more information.

One of the key features of the Stormceptor technology is its ability to capture and retain spills. While the standard Stormceptor System provides excellent protection for spill control, there are additional options to enhance spill protection if desired.

6.1. Oil Level Alarm

The oil level alarm is an electronic monitoring system designed to trigger a visual and audible alarm when a pre-set level of oil is reached within the lower chamber. As a standard, the oil

level alarm is designed to trigger at approximately 85% of the unit's available depth level for oil capture. The feature acts as a safeguard against spills caused by exceeding the oil storage capacity of the separator and eliminates the need for manual oil level inspection. The oil level alarm installed on the Stormceptor insert is illustrated in Figure 4.

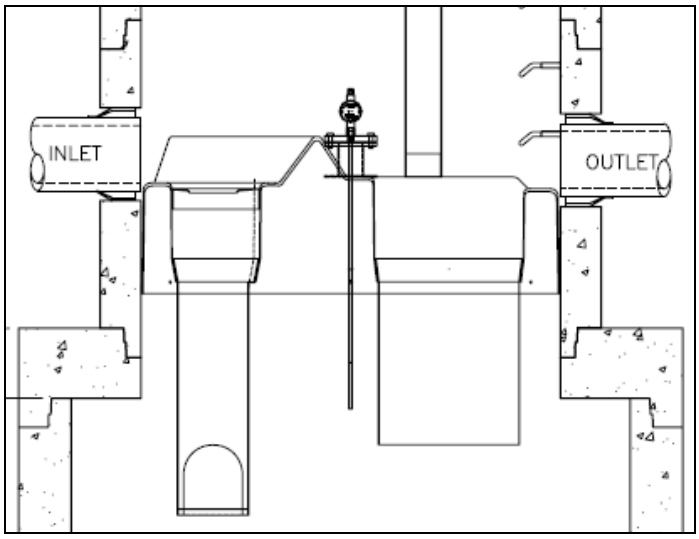

Figure 4. Oil level alarm

6.2. Increased Volume Storage Capacity

The Stormceptor unit may be modified to store a greater spill volume than is typically available. Under such a scenario, instead of installing a larger than required unit, modifications can be made to the recommended Stormceptor model to accommodate larger volumes. Contact your local Stormceptor representative for additional information and assistance for modifications.

7. Stormceptor Options

The Stormceptor System allows flexibility to incorporate to existing and new storm drainage infrastructure. The following section identifies considerations that should be reviewed when installing the system into a drainage network. For conditions that fall outside of the recommendations in this section, please contact your local Stormceptor representative for further guidance.

7.1. Installation Depth Minimum Cover

The minimum distance from the top of grade to the crown of the inlet pipe is 24 inches (600 mm). For situations that have a lower minimum distance, contact your local Stormceptor representative.

7.2. Maximum Inlet and Outlet Pipe Diameters

Maximum inlet and outlet pipe diameters are illustrated in Figure 5. Contact your local Stormceptor representative for larger pipe diameters.

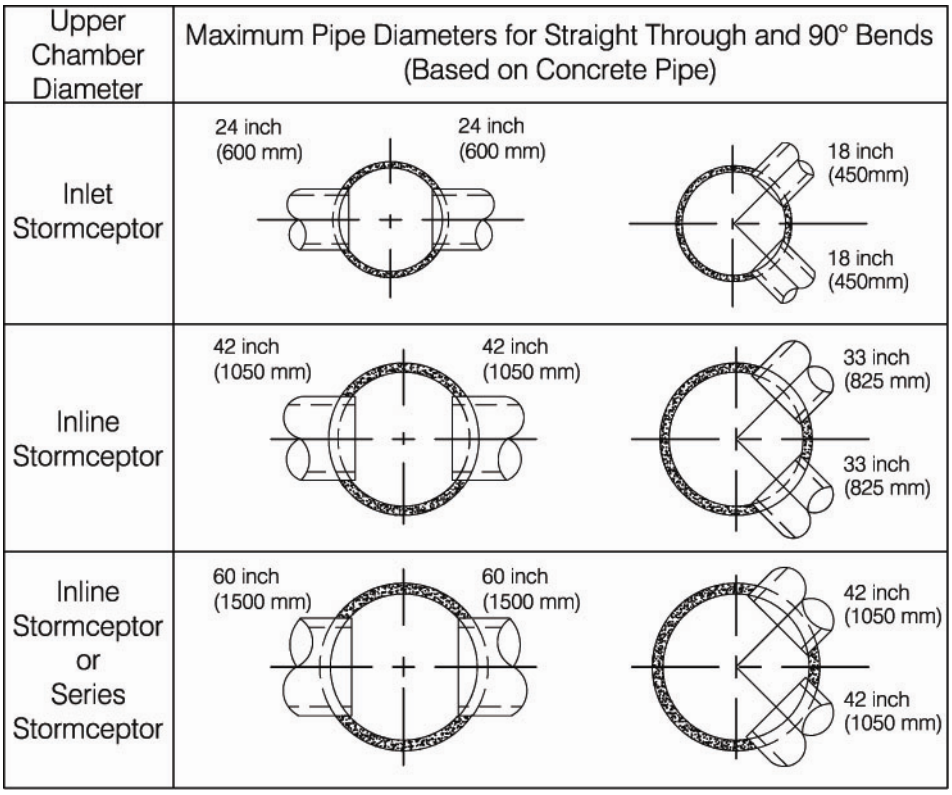

Figure 5. Maximum pipe diameters for straight through and bend applications

*The bend should only be incorporated into the second structure (downstream structure) of the Series Stormceptor System

7.3. Bends

The Stormceptor System can be used to change horizontal alignment in the storm drain network up to a maximum of 90 degrees. Figure 6 illustrates the typical bend situations of the Stormceptor System. Bends should only be applied to the second structure (downstream structure) of the Series Stormceptor System.

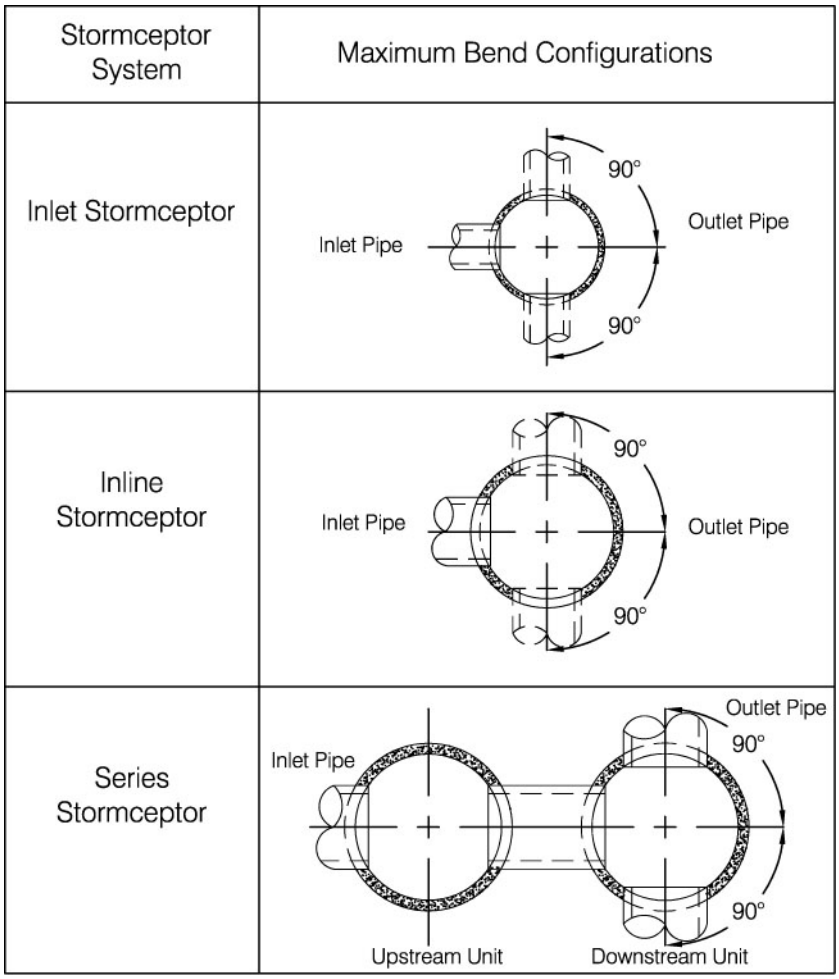

Figure 6. Maximum bend angles

7.4. Multiple Inlet Pipes

The Inlet and Inline Stormceptor System can accommodate two or more inlet pipes. The maximum number of inlet pipes that can be accommodated into a Stormceptor unit is a function of the number, alignment and diameter of the pipes and its effects on the structural integrity of the precast concrete. When multiple inlet pipes are used for new developments, each inlet pipe shall have an invert elevation 3 inches (75 mm) higher than the outlet pipe invert elevation.

7.5. Inlet/Outlet Pipe Invert Elevations

Recommended inlet and outlet pipe invert differences are listed in Table 3.

Table 3. Recommended drops between inlet and outlet pipe inverts.

Number of Inlet Pipes	Inlet System	In-Line System	Series System
1	3 inches (75 mm)	1 inch (25 mm)	3 inches (75 mm)
>1	3 inches (75 mm)	3 inches (75 mm)	Not Applicable

7.6. Shallow Stormceptor

In cases where there may be restrictions to the depth of burial of storm sewer systems. In this situation, for selected Stormceptor models, the lower chamber components may be increased in diameter to reduce the overall depth of excavation required.

7.7. Customized Live Load

The Stormceptor system is typically designed for local highway truck loading (AASHTO HS-20). When the project requires live loads greater than HS-20, the Stormceptor System may be customized structurally for a pre-specified live load. Contact your local Stormceptor representative for customized loading conditions.

7.8. Pre-treatment

The Stormceptor System may be sized to remove sediment and for spills control in conjunction with other stormwater BMPs to meet the water quality objective. For pretreatment applications, the Stormceptor System should be the first unit in a treatment train. The benefits of pre-treatment include the extension of the operational life (extension of maintenance frequency) of large stormwater management facilities, prevention of spills and lower total life-cycle maintenance cost.

7.9. Head loss

The head loss through the Stormceptor System is similar to a 60 degree bend at a manhole. The K value for calculating minor losses is approximately 1.3 (minor loss = $k*1.3v^2/2g$). However, when a Submerged modification is applied to a Stormceptor unit, the corresponding K value is 4.

7.10. Submerged

The Submerged modification, Figure 7, allows the Stormceptor System to operate in submerged or partially submerged storm sewers. This configuration can be installed on all models of the Stormceptor System by modifying the fiberglass insert. A customized weir height and a secondary drop tee are added.

Submerged instances are defined as standing water in the storm drain system during zero flow conditions. In these instances, the following information is necessary for the proper design and application of submerged modifications:

- Stormceptor top of grade elevation
- Stormceptor outlet pipe invert elevation
- Standing water elevation

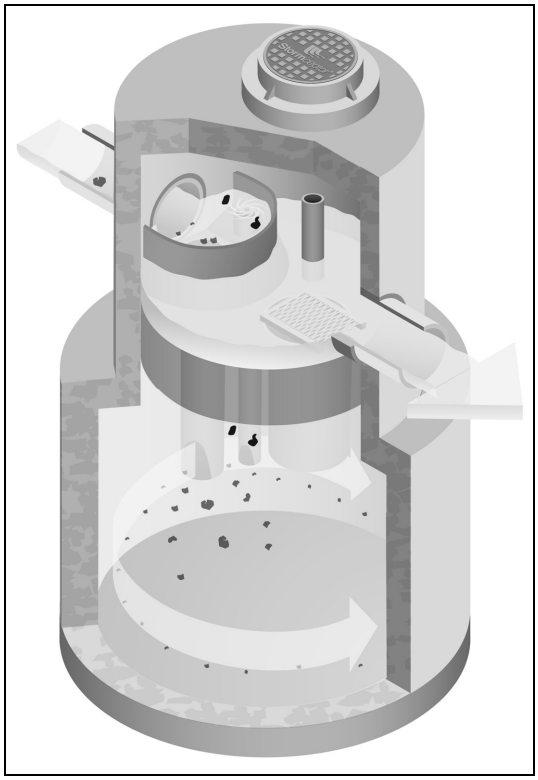

Figure 7. Submerged Stormceptor

8. Comparing Technologies

Designers have many choices available to achieve water quality goals in the treatment of stormwater runoff. Since many alternatives are available for use in stormwater quality treatment it is important to consider how to make an appropriate comparison between "approved alternatives". The following is a guide to assist with the accurate comparison of differing technologies and performance claims.

8.1. Particle Size Distribution (PSD)

The most sensitive parameter to the design of a stormwater quality device is the selection of the design particle size. While it is recommended that the actual particle size distribution (PSD) for sites be measured prior to sizing, alternative values for particle size should be selected to represent what is likely to occur naturally on the site. A reasonable estimate of a particle size distribution likely to be found on parking lots or other impervious surfaces should consist of a wide range of particles such as 20 microns to 2,000 microns (*Ontario MOE, 1994*).

There is no absolute right particle size distribution or specific gravity and the user is cautioned to review the site location, characteristics, material handling practices and regulatory requirements when selecting a particle size distribution. When comparing technologies, designs using different PSDs will result in incomparable TSS removal efficiencies. The PSD of the TSS removed needs to be standard between two products to allow for an accurate comparison.

8.2. Scour Prevention

In order to accurately predict the performance of a manufactured treatment device, there must be confidence that it will perform under all conditions. Since rainfall patterns cannot be predicted, stormwater quality devices placed in storm sewer systems must be able to withstand extreme events, and ensure that all pollutants previously captured are retained in the system.

In order to have confidence in a system's performance under extreme conditions, independent validation of scour prevention is essential when examining different technologies. Lack of independent verification of scour prevention should make a designer wary of accepting any product's performance claims.

8.3. Hydraulics

Full scale laboratory testing has been used to confirm the hydraulics of the Stormceptor System. Results of lab testing have been used to physically design the Stormceptor System and the sewer pipes entering and leaving the unit. Key benefits of Stormceptor are:

- Low head loss (typical k value of 1.3)
- Minimal inlet/outlet invert elevation drop across the structure
- Use as a bend structure
- Accommodates multiple inlets

The adaptability of the treatment device to the storm sewer design infrastructure can affect the overall performance and cost of the site.

8.4. Hydrology

Stormwater quality treatment technologies need to perform under varying climatic conditions. These can vary from long low intensity rainfall to short duration, high intensity storms. Since a treatment device is expected to perform under all these conditions, it makes sense that any system's design should accommodate those conditions as well.

Long-term continuous simulation evaluates the performance of a technology under the varying conditions expected in the climate of the subject site. Single, peak event design does not provide this information and is not equivalent to long-term simulation. Designers should request long-term simulation performance to ensure the technology can meet the long-term water quality objective.

9. Testing

The Stormceptor System has been the most widely monitored stormwater treatment technology in the world. Performance verification and monitoring programs are completed to the strictest standards and integrity. Since its introduction in 1990, numerous independent field tests and studies detailing the effectiveness of the Stormceptor System have been completed.

- Coventry University, UK – 97% removal of oil, 83% removal of sand and 73% removal of peat
- National Water Research Institute, Canada, - scaled testing for the development of the Stormceptor System identifying both TSS removal and scour prevention.
- New Jersey TARP Program – full scale testing of an STC 900 demonstrating 75% TSS removal of particles from 1 to 1000 microns. Scour testing completed demonstrated that the system does not scour. The New Jersey Department of Environmental Protection was followed.
- City of Indianapolis – full scale testing of an STC 900 demonstrating over 80% TSS removal of particles from 50 microns to 300 microns at 130% of the unit's operating rate. Scour testing completed demonstrated that the system does not scour.
- Westwood Massachusetts (1997), demonstrated >80% TSS removal
- Como Park (1997), demonstrated 76% TSS removal
- Ontario MOE SWAMP Program – 57% removal of 1 to 25 micron particles
- Laval Quebec – 50% removal of 1 to 25 micron particles

10. Installation

The installation of the concrete Stormceptor should conform in general to state highway, or local specifications for the installation of manholes. Selected sections of a general specification that are applicable are summarized in the following sections.

10.1. Excavation

Excavation for the installation of the Stormceptor should conform to state highway, or local specifications. Topsoil removed during the excavation for the Stormceptor should be stockpiled in designated areas and should not be mixed with subsoil or other materials. Topsoil stockpiles and the general site preparation for the installation of the Stormceptor should conform to state highway or local specifications.

The Stormceptor should not be installed on frozen ground. Excavation should extend a minimum of 12 inches (300 mm) from the precast concrete surfaces plus an allowance for shoring and bracing where required. If the bottom of the excavation provides an unsuitable foundation additional excavation may be required.

In areas with a high water table, continuous dewatering may be required to ensure that the excavation is stable and free of water.

10.2. Backfilling

Backfill material should conform to state highway or local specifications. Backfill material should be placed in uniform layers not exceeding 12 inches (300mm) in depth and compacted to state highway or local specifications.

11. Stormceptor Construction Sequence

The concrete Stormceptor is installed in sections in the following sequence:

1. Aggregate base
2. Base slab
3. Lower chamber sections
4. Upper chamber section with fiberglass insert
5. Connect inlet and outlet pipes
6. Assembly of fiberglass insert components (drop tee, riser pipe, oil cleanout port and orifice plate
7. Remainder of upper chamber
8. Frame and access cover

The precast base should be placed level at the specified grade. The entire base should be in contact with the underlying compacted granular material. Subsequent sections, complete with joint seals, should be installed in accordance with the precast concrete manufacturer's recommendations.

Adjustment of the Stormceptor can be performed by lifting the upper sections free of the excavated area, re-leveling the base and re-installing the sections. Damaged sections and gaskets should be repaired or replaced as necessary. Once the Stormceptor has been constructed, any lift holes must be plugged with mortar.

12. Maintenance

12.1. Health and Safety

The Stormceptor System has been designed considering safety first. It is recommended that confined space entry protocols be followed if entry to the unit is required. In addition, the fiberglass insert has the following health and safety features:

- Designed to withstand the weight of personnel
- A safety grate is located over the 24 inch (600 mm) riser pipe opening
- Ladder rungs can be provided for entry into the unit, if required

12.2. Maintenance Procedures

Maintenance of the Stormceptor system is performed using vacuum trucks. No entry into the unit is required for maintenance (in most cases). The vacuum service industry is a well-established sector of the service industry that cleans underground tanks, sewers and catch basins. Costs to clean a Stormceptor will vary based on the size of unit and transportation distances.

The need for maintenance can be determined easily by inspecting the unit from the surface. The depth of oil in the unit can be determined by inserting a dipstick in the oil inspection/cleanout port.

Similarly, the depth of sediment can be measured from the surface without entry into the Stormceptor via a dipstick tube equipped with a ball valve. This tube would be inserted through the riser pipe. Maintenance should be performed once the sediment depth exceeds the guideline values provided in the Table 4.

Table 4. Sediment Depths indicating required servicing.

Sediment Depths Indicating Required Servicing *	
Model	Sediment Depth inches (mm)
450i	8 (200)
900	8 (200)
1200	10 (250)
1800	15 (381)
2400	12 (300)
3600	17 (430)
4800	15 (380)
6000	18 (460)
7200	15 (381)
11000	17 (380)
13000	20 (500)
16000	17 (380)
* based on 15% of the Stormceptor unit's total storage	

Although annual servicing is recommended, the frequency of maintenance may need to be increased or reduced based on local conditions (i.e. if the unit is filling up with sediment more quickly than projected, maintenance may be required semi-annually; conversely once the site has stabilized maintenance may only be required every two or three years).

Oil is removed through the oil inspection/cleanout port and sediment is removed through the riser pipe. Alternatively oil could be removed from the 24 inches (600 mm) opening if water is removed from the lower chamber to lower the oil level below the drop pipes.

The following procedures should be taken when cleaning out Stormceptor:

1. Check for oil through the oil cleanout port
2. Remove any oil separately using a small portable pump
3. Decant the water from the unit to the sanitary sewer, if permitted by the local regulating authority, or into a separate containment tank
4. Remove the sludge from the bottom of the unit using the vacuum truck
5. Re-fill Stormceptor with water where required by the local jurisdiction

12.3. Submerged Stormceptor

Careful attention should be paid to maintenance of the Submerged Stormceptor System. In cases where the storm drain system is submerged, there is a requirement to plug both the inlet and outlet pipes to economically clean out the unit.

12.4. Hydrocarbon Spills

The Stormceptor is often installed in areas where the potential for spills is great. The Stormceptor System should be cleaned immediately after a spill occurs by a licensed liquid waste hauler.

12.5. Disposal

Requirements for the disposal of material from the Stormceptor System are similar to that of any other stormwater Best Management Practice (BMP) where permitted. Disposal options for the sediment may range from disposal in a sanitary trunk sewer upstream of a sewage treatment plant, to disposal in a sanitary landfill site. Petroleum waste products collected in the Stormceptor (free oil/chemical/fuel spills) should be removed by a licensed waste management company.

12.6. Oil Sheens

With a steady influx of water with high concentrations of oil, a sheen may be noticeable at the Stormceptor outlet. This may occur because a rainbow or sheen can be seen at very small oil concentrations (<10 mg/L). Stormceptor will remove over 98% of all free oil spills from storm sewer systems for dry weather or frequently occurring runoff events.

The appearance of a sheen at the outlet with high influent oil concentrations does not mean the unit is not working to this level of removal. In addition, if the influent oil is emulsified the Stormceptor will not be able to remove it. The Stormceptor is designed for free oil removal and not emulsified conditions.

Appendix 1 Stormceptor Drawings

STC 450i Precast Concrete Stormceptor®
(450 U.S. Gallon Capacity)

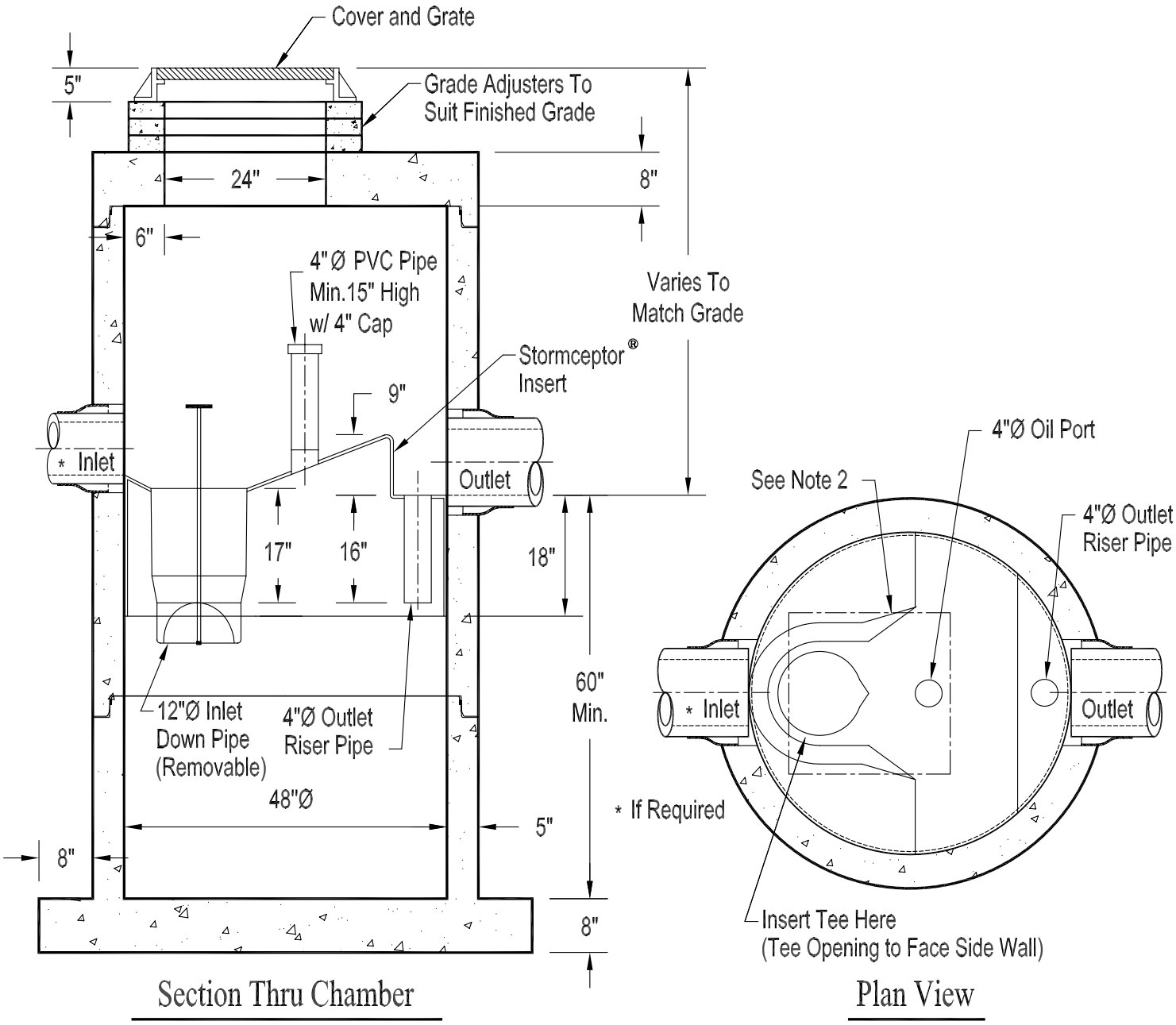

Notes:

1. The Use Of Flexible Connection is Recommended at The Inlet and Outlet Where Applicable.
2. The Cover Should be Positioned Over The Inlet Drop Pipe and The Oil Port.
3. The Stormceptor System is protected by one or more of the following U.S. Patents: #4985148, #5498331, #5725760, #5753115, #5849181, #6068765, #6371690.
4. Contact a Concrete Pipe Division representative for further details not listed on this drawing.

STC 900 Precast Concrete Stormceptor ®
(900 U.S. Gallon Capacity)

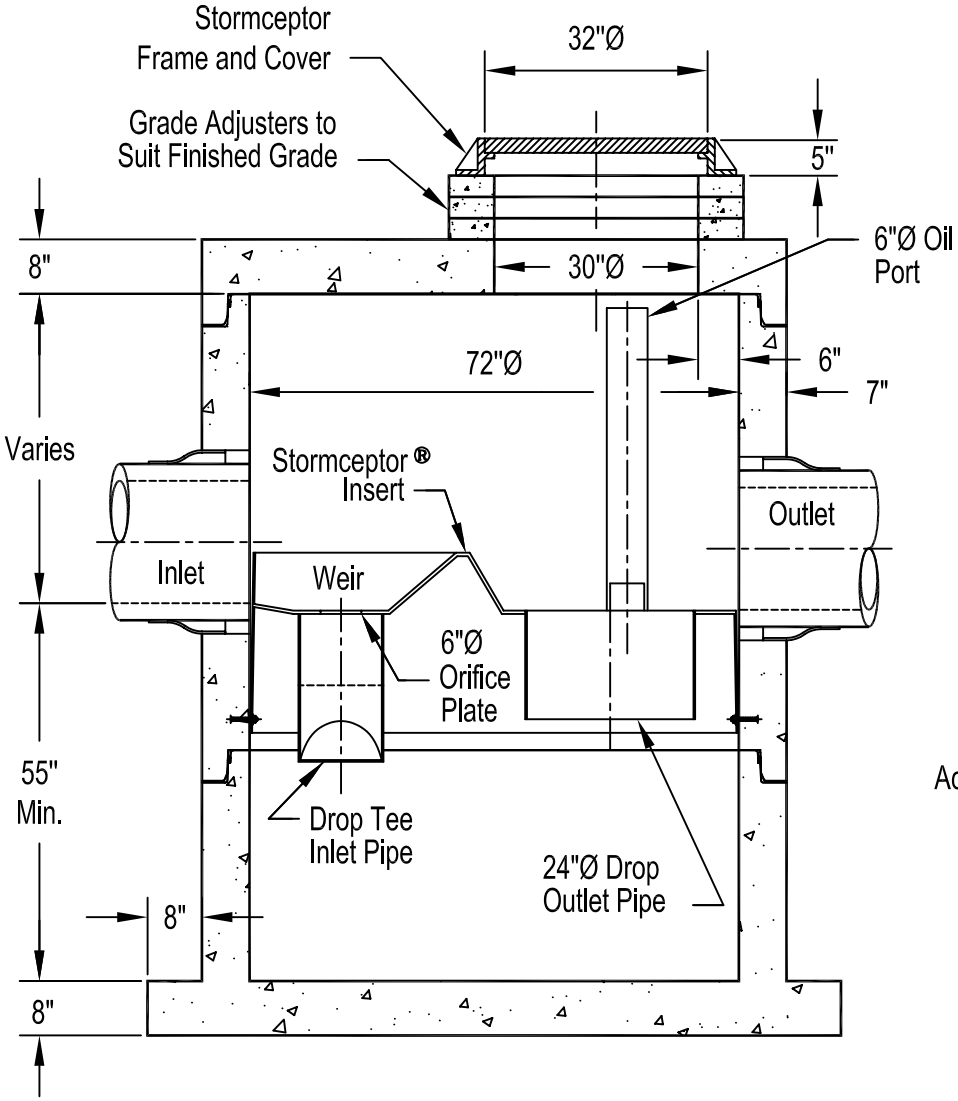

Section Thru Chamber

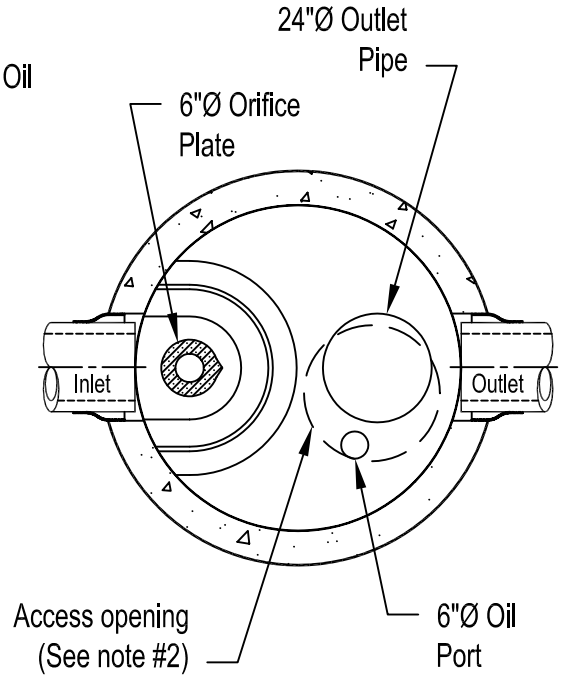

Plan View

Notes:

1. The Use Of Flexible Connection is Recommended at The Inlet and Outlet Where Applicable.
2. The Cover Should be Positioned Over The Outlet Drop Pipe and The Oil Port.
3. The Stormceptor System is protected by one or more of the following U.S. Patents: #4985148, #5498331, #5725760, #5753115, #5849181, #6068765, #6371690.
4. Contact a Concrete Pipe Division representative for further details not listed on this drawing.

STC 1200 Precast Concrete Stormceptor ®
(1200 U.S. Gallon Capacity)

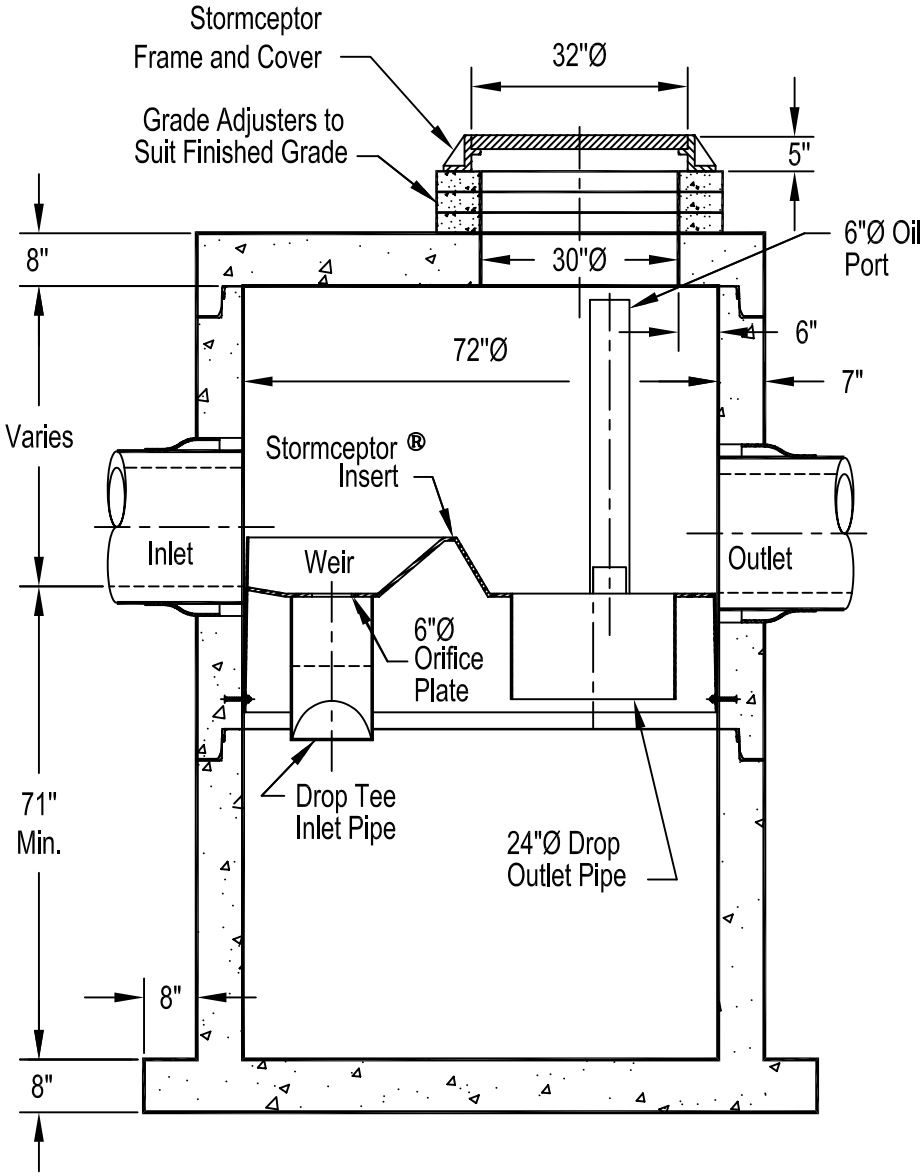

Section Thru Chamber

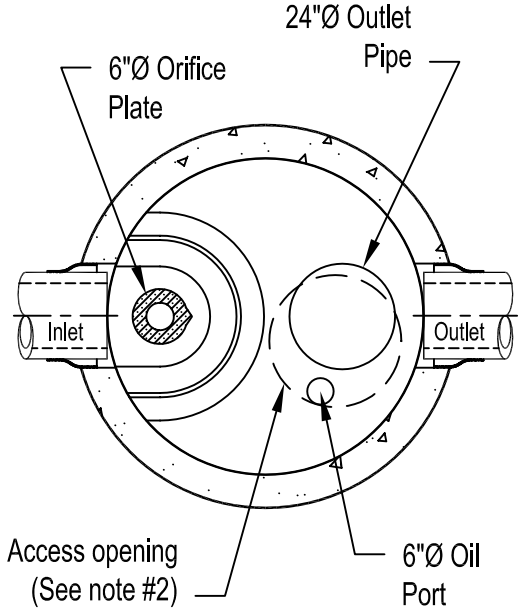

Plan View

Notes:

1. The Use Of Flexible Connection is Recommended at The Inlet and Outlet Where Applicable.
2. The Cover Should be Positioned Over The Outlet Drop Pipe and The Oil Port.
3. The Stormceptor System is protected by one or more of the following U.S. Patents: #4985148, #5498331, #5725760, #5753115, #5849181, #6068765, #6371690.
4. Contact a Concrete Pipe Division representative for further details not listed on this drawing.

STC 1800 Precast Concrete Stormceptor®
(1800 U.S. Gallon Capacity)

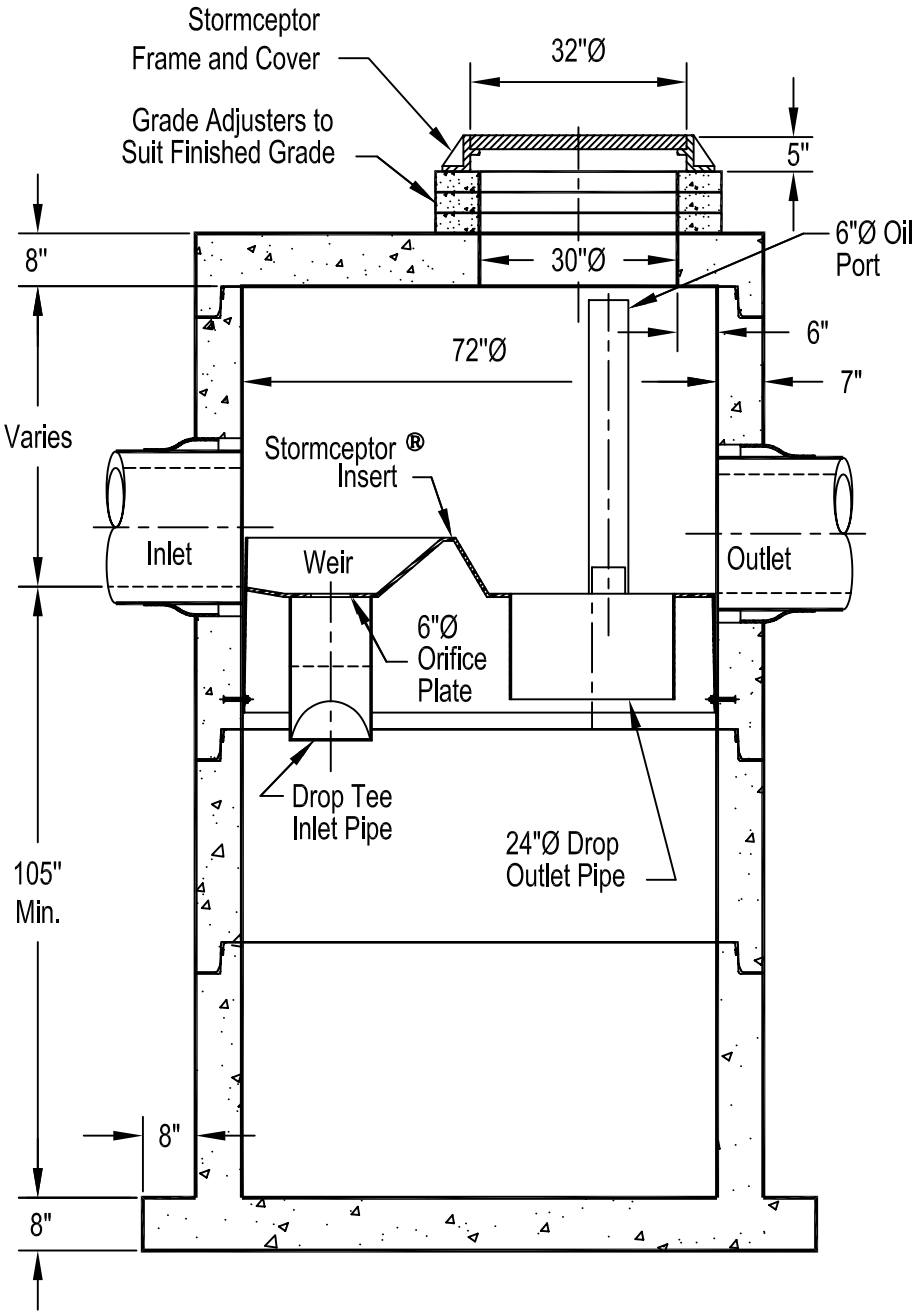

Section Thru Chamber

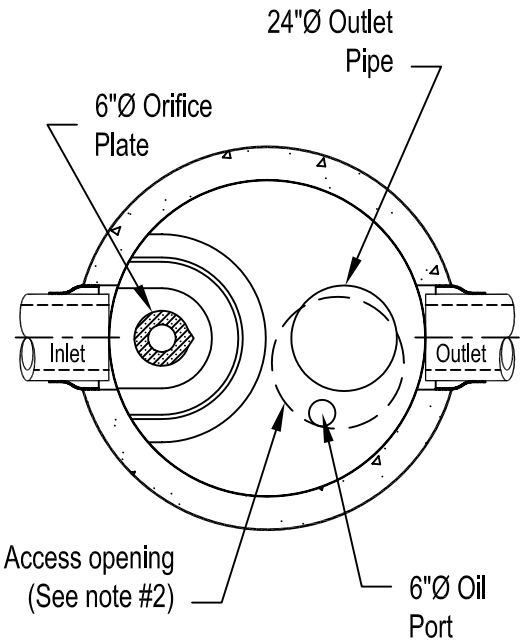

Plan View

Notes:

1. The Use Of Flexible Connection is Recommended at The Inlet and Outlet Where Applicable.
2. The Cover Should be Positioned Over The Outlet Drop Pipe and The Oil Port.
3. The Stormceptor System is protected by one or more of the following U.S. Patents: #4985148, #5498331, #5725760, #5753115, #5849181, #6068765, #6371690.
4. Contact a Concrete Pipe Division representative for further details not listed on this drawing.

STC 2400 Precast Concrete Stormceptor®
(2400 U.S. Gallon Capacity)

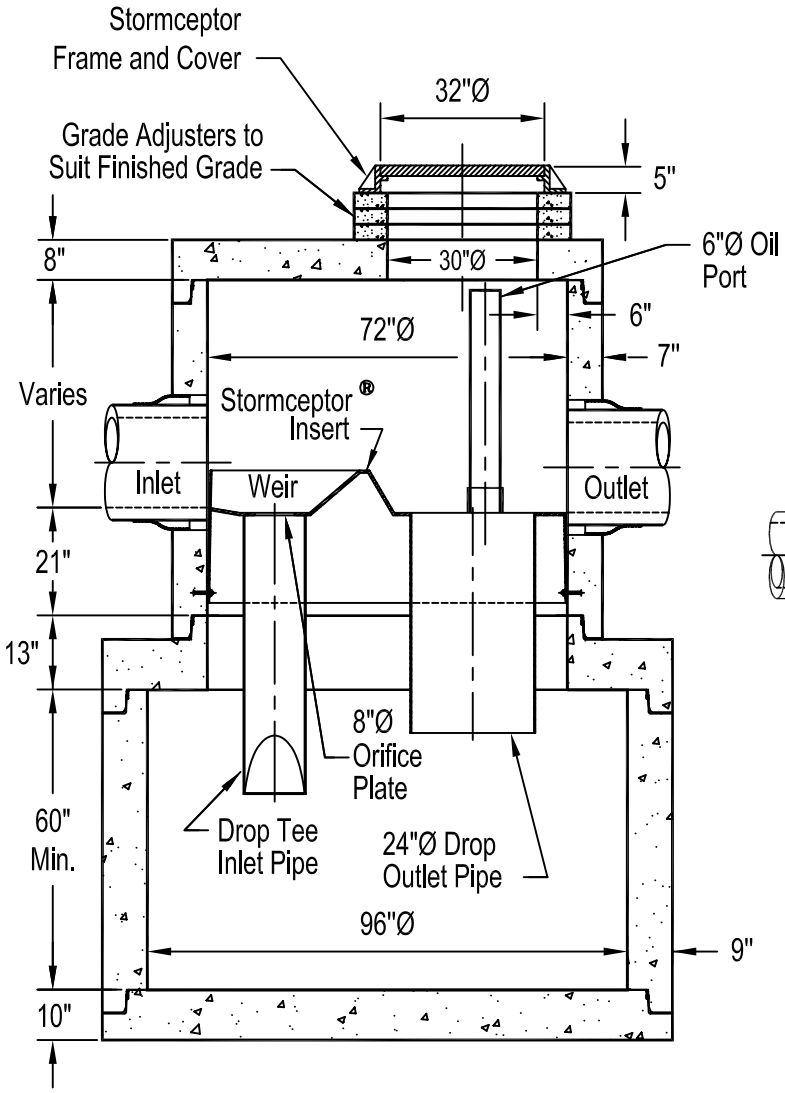

Section Thru Chamber

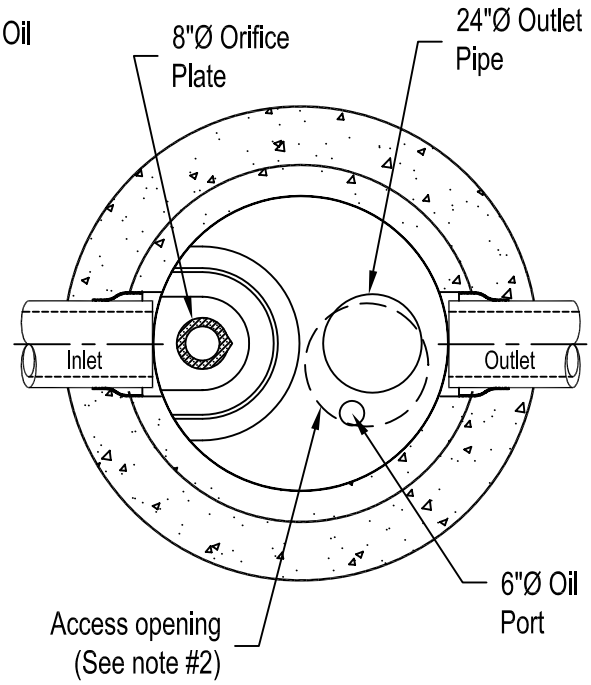

Plan View

Notes:

1. The Use Of Flexible Connection is Recommended at The Inlet and Outlet Where Applicable.
2. The Cover Should be Positioned Over The Outlet Drop Pipe and The Oil Port.
3. The Stormceptor System is protected by one or more of the following U.S. Patents: #4985148, #5498331, #5725760, #5753115, #5849181, #6068765, #6371690.
4. Contact a Concrete Pipe Division representative for further details not listed on this drawing.

STC 3600 Precast Concrete Stormceptor®
(3600 U.S. Gallon Capacity)

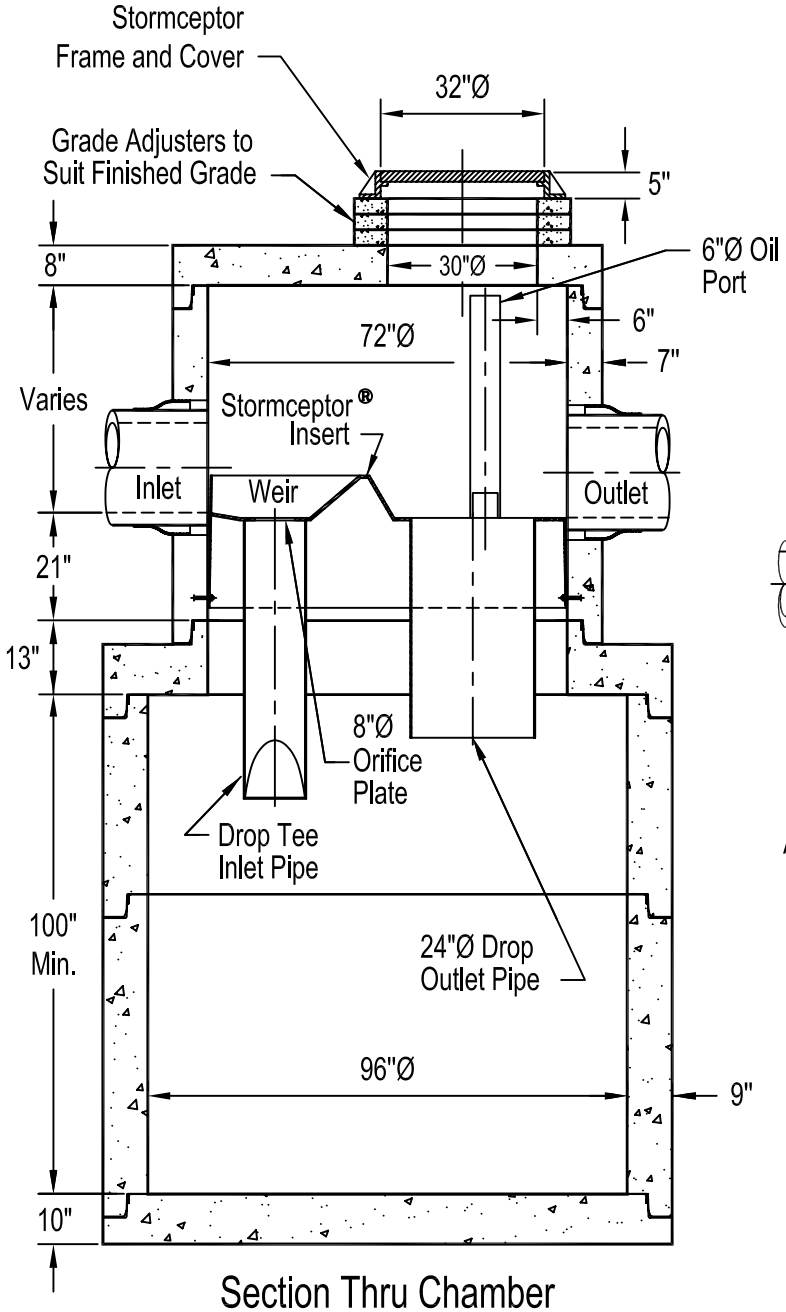

Section Thru Chamber

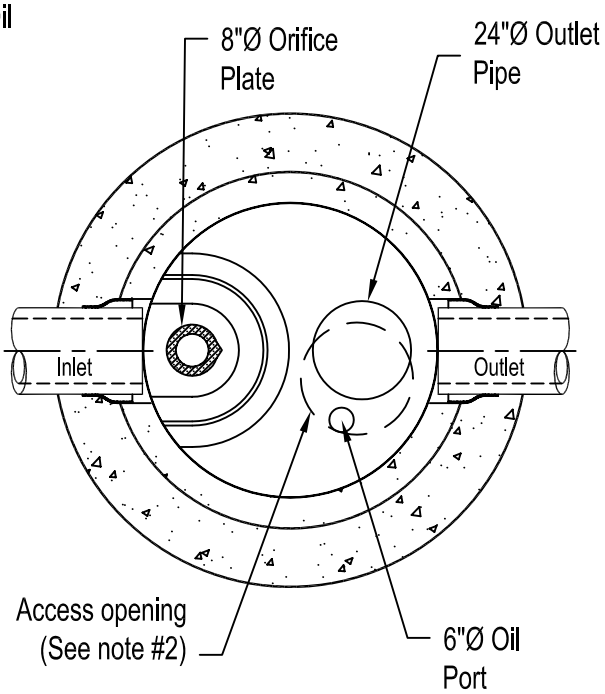

Plan View

Notes:

1. The Use Of Flexible Connection is Recommended at The Inlet and Outlet Where Applicable.
2. The Cover Should be Positioned Over The Outlet Drop Pipe and The Oil Port.
3. The Stormceptor System is protected by one or more of the following U.S. Patents: #4985148, #5498331, #5725760, #5753115, #5849181, #6068765, #6371690.
4. Contact a Concrete Pipe Division representative for further details not listed on this drawing.

STC 4800 Precast Concrete Stormceptor®
(4800 U.S. Gallon Capacity)

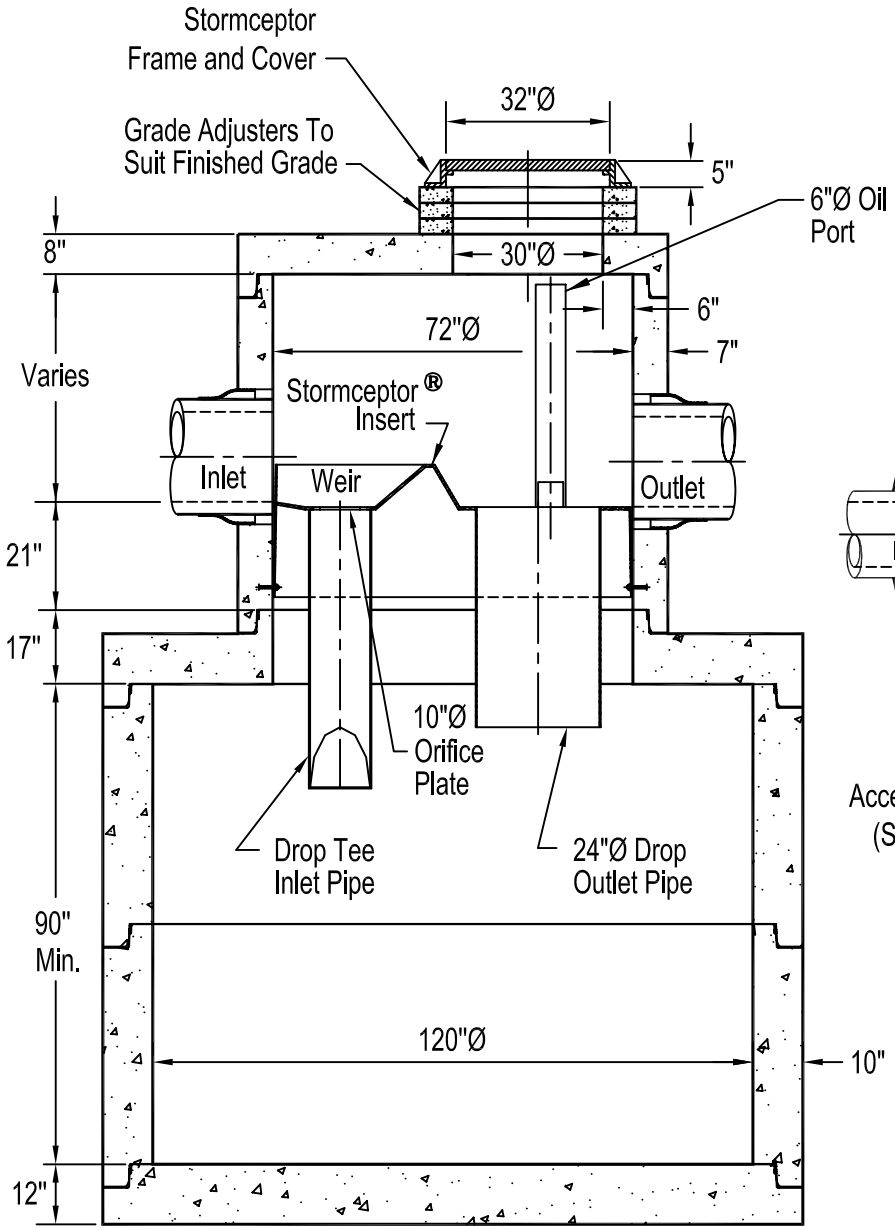

Section Thru Chamber

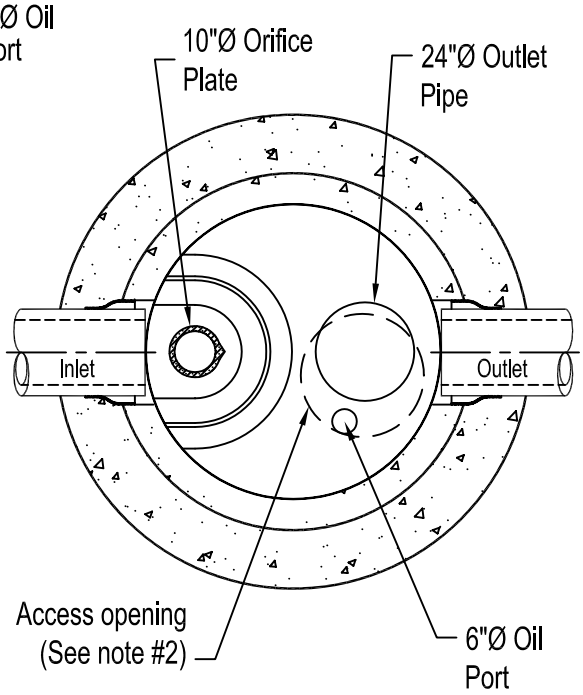

Plan View

Notes:

1. The Use Of Flexible Connection is Recommended at The Inlet and Outlet Where Applicable.
2. The Cover Should be Positioned Over The Outlet Drop Pipe and The Oil Port.
3. The Stormceptor System is protected by one or more of the following U.S. Patents: #4985148, #5498331, #5725760, #5753115, #5849181, #6068765, #6371690.
4. Contact a Concrete Pipe Division representative for further details not listed on this drawing.

STC 6000 Precast Concrete Stormceptor®
(6000 U.S. Gallon Capacity)

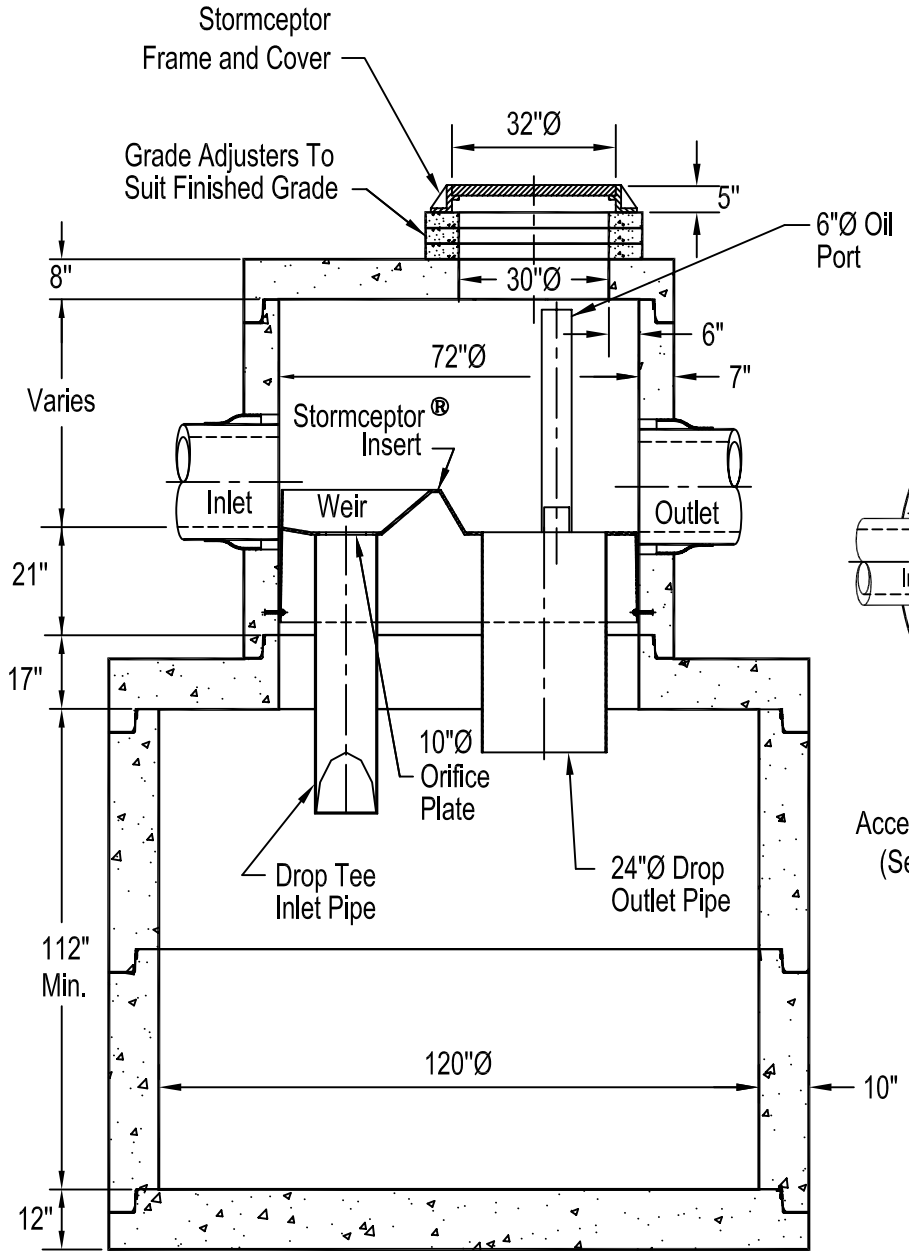

Section Thru Chamber

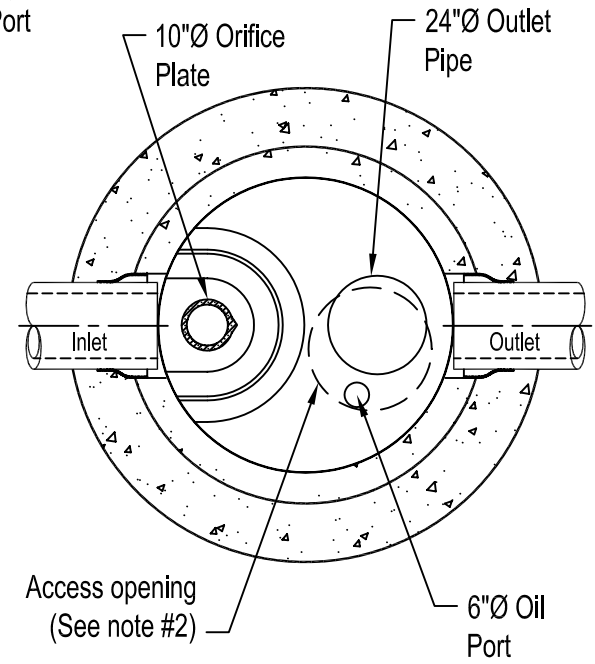

Plan View

Notes:

1. The Use Of Flexible Connection is Recommended at The Inlet and Outlet Where Applicable.
2. The Cover Should be Positioned Over The Outlet Drop Pipe and The Oil Port.
3. The Stormceptor System is protected by one or more of the following U.S. Patents: #4985148, #5498331, #5725760, #5753115, #5849181, #6068765, #6371690.
4. Contact a Concrete Pipe Division representative for further details not listed on this drawing.

STC 7200 Precast Concrete Stormceptor ®
(7200 U.S. Gallon Capacity)

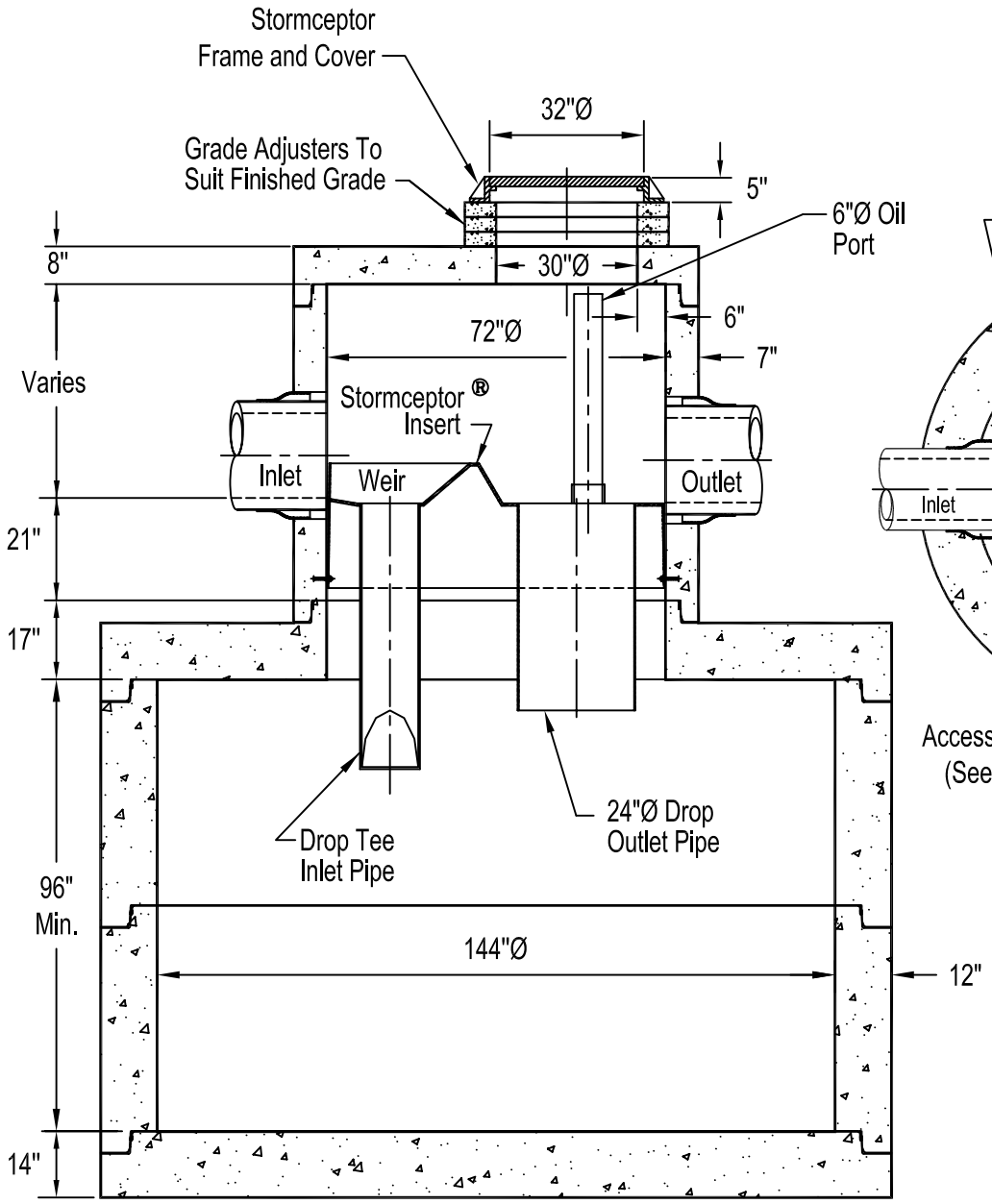

Section Thru Chamber

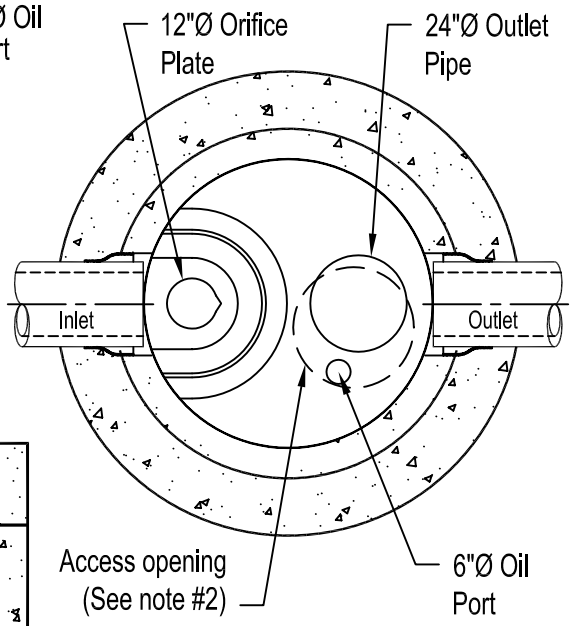

Plan View

Notes:

1. The Use Of Flexible Connection is Recommended at The Inlet and Outlet Where Applicable.
2. The Cover Should be Positioned Over The Outlet Drop Pipe and The Oil Port.
3. The Stormceptor System is protected by one or more of the following U.S. Patents: #4985148, #5498331, #5725760, #5753115, #5849181, #6068765, #6371690.
4. Contact a Concrete Pipe Division representative for further details not listed on this drawing.

Plan View
(STC 11000s, STC 13000s and STC16000s)

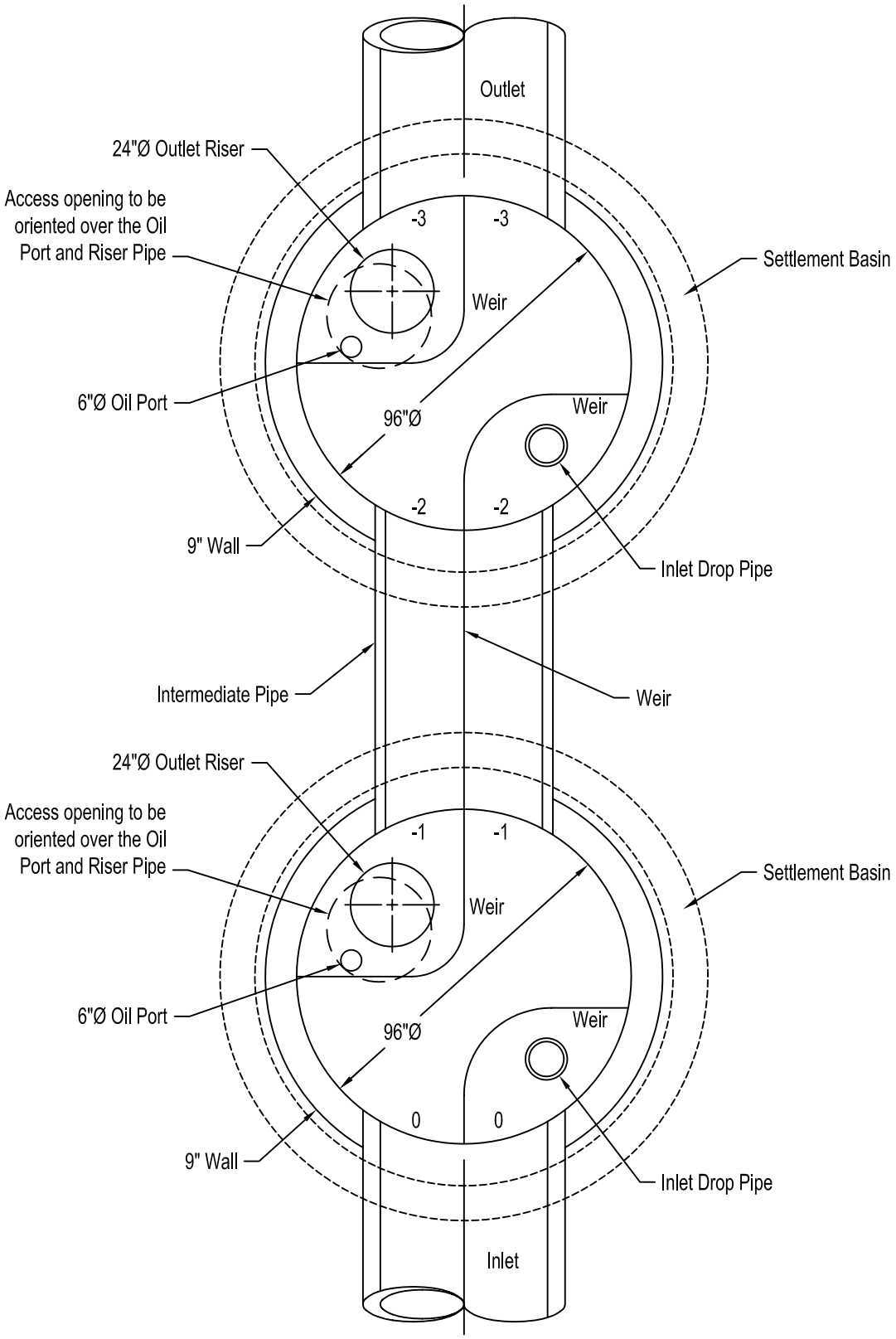

STC 11000s Precast Concrete Stormceptor®
(11000 U.S. Gallon Capacity)

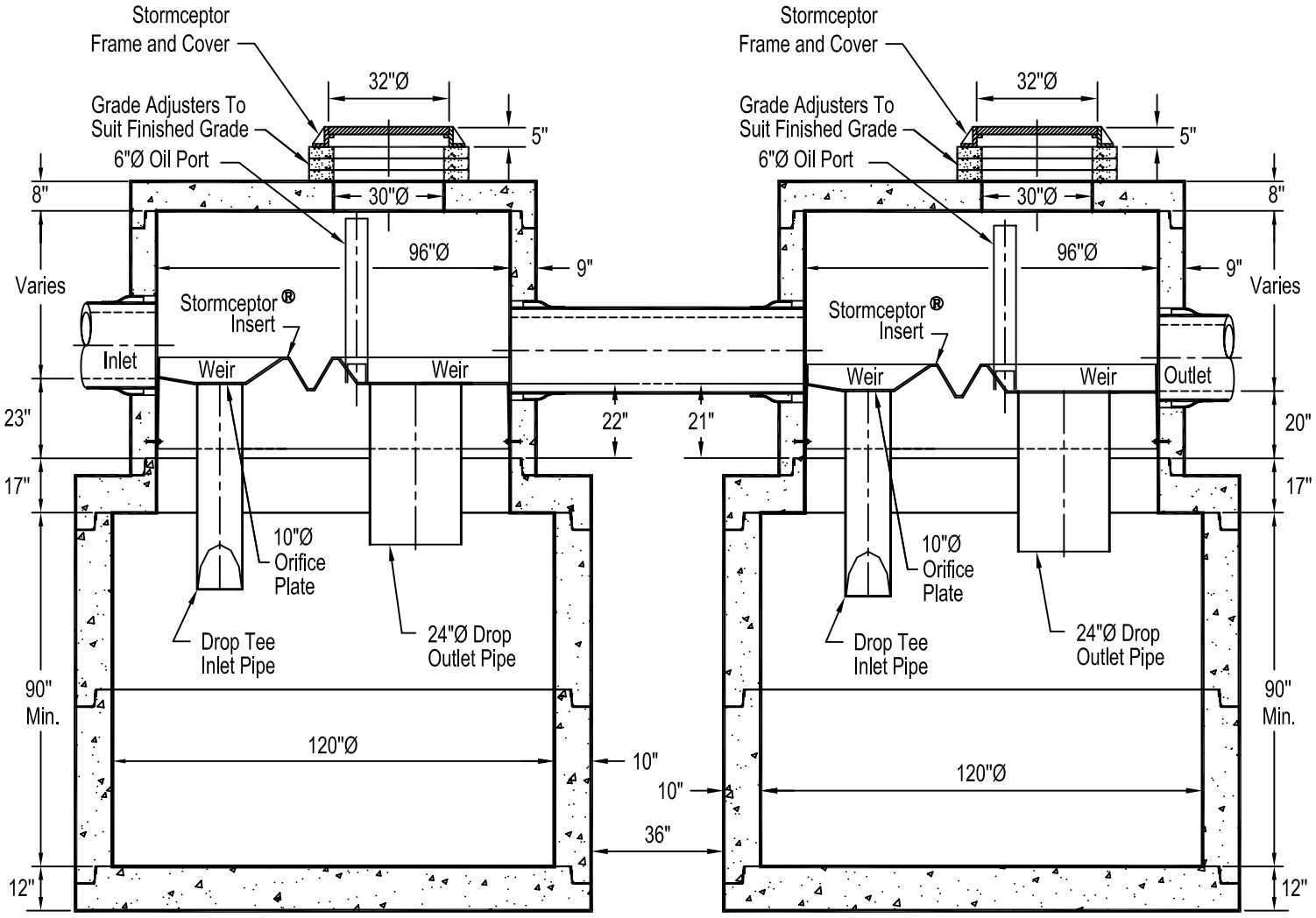

Section Thru Chambers

Notes:

1. The Use Of Flexible Connection is Recommended at The Inlet and Outlet Where Applicable.
2. The Cover Should be Positioned Over The Outlet Drop Pipe and The Oil Port.
3. The Stormceptor System is protected by one or more of the following U.S. Patents: #4985148, #5498331, #5725760, #5753115, #5849181, #6068765, #6371690.
4. Contact a Concrete Pipe Division representative for further details not listed on this drawing.

STC 13000s Precast Concrete Stormceptor®
(13000 U.S. Gallon Capacity)

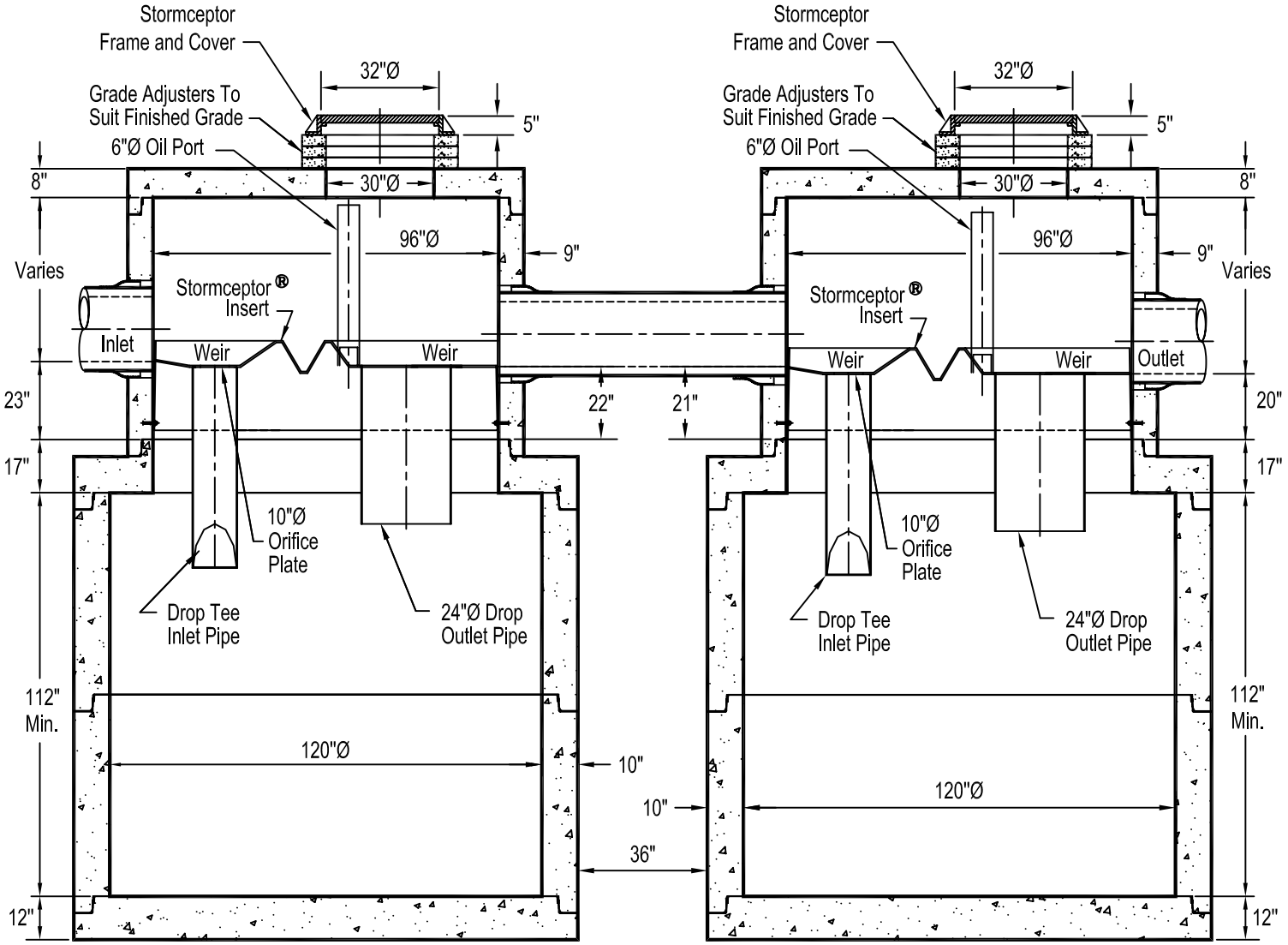

Section Thru Chambers

Notes:

1. The Use Of Flexible Connection is Recommended at The Inlet and Outlet Where Applicable.
2. The Cover Should be Positioned Over The Outlet Drop Pipe and The Oil Port.
3. The Stormceptor System is protected by one or more of the following U.S. Patents: #4985148, #5498331, #5725760, #5753115, #5849181, #6068765, #6371690.
4. Contact a Concrete Pipe Division representative for further details not listed on this drawing.

STC 16000s Precast Concrete Stormceptor®
(16000 U.S. Gallon Capacity)

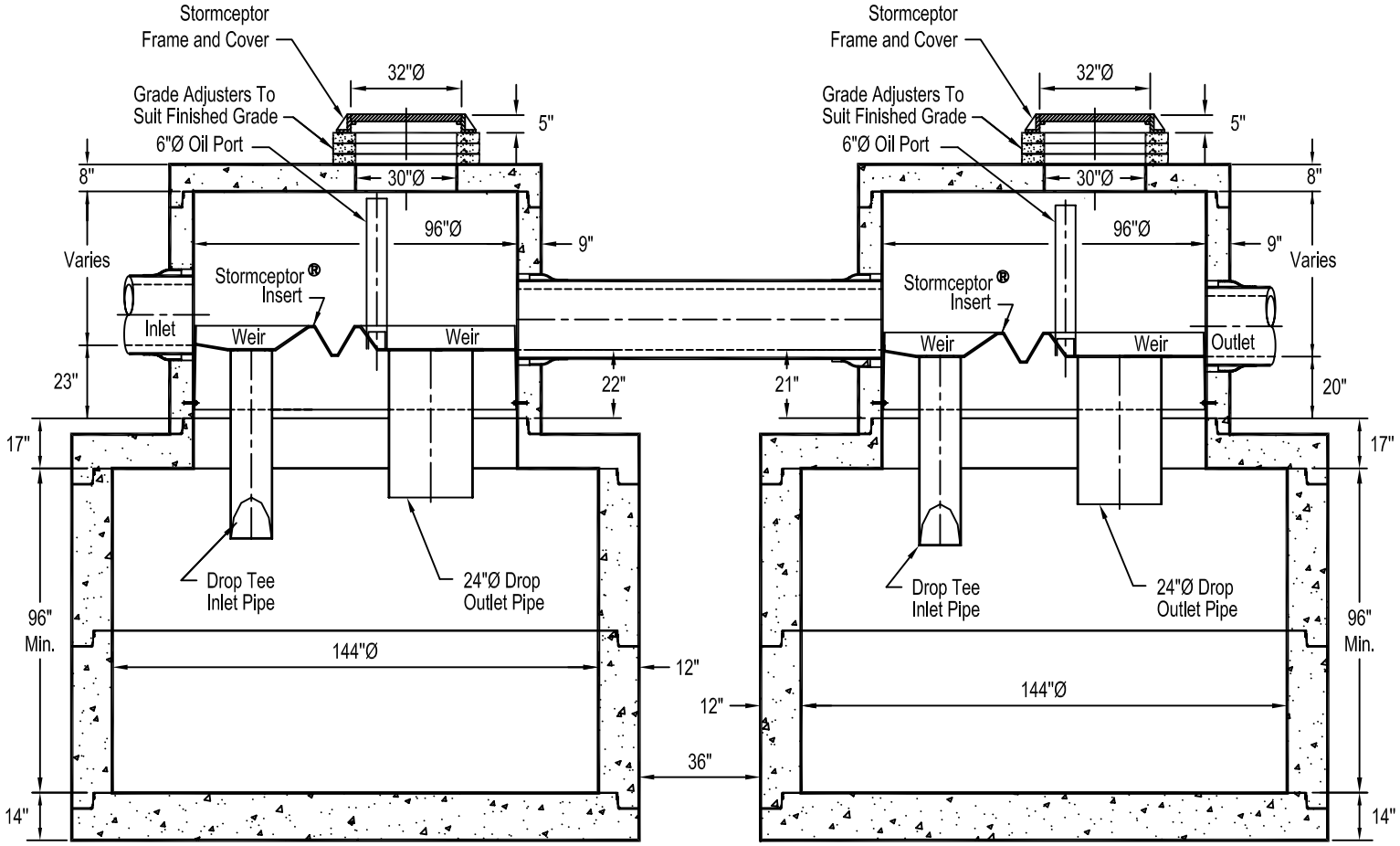

Section Thru Chambers

Notes:

1. The Use Of Flexible Connection is Recommended at The Inlet and Outlet Where Applicable.
2. The Cover Should be Positioned Over The Outlet Drop Pipe and The Oil Port.
3. The Stormceptor System is protected by one or more of the following U.S. Patents: #4985148, #5498331, #5725760, #5753115, #5849181, #6068765, #6371690.
4. Contact a Concrete Pipe Division representative for further details not listed on this drawing.

Contact

800 909 7763

www.rinkerstormceptor.com

Rinker MATERIALS™