Dalmaray Concrete Products Inc.

Tank Model 4300 Tank

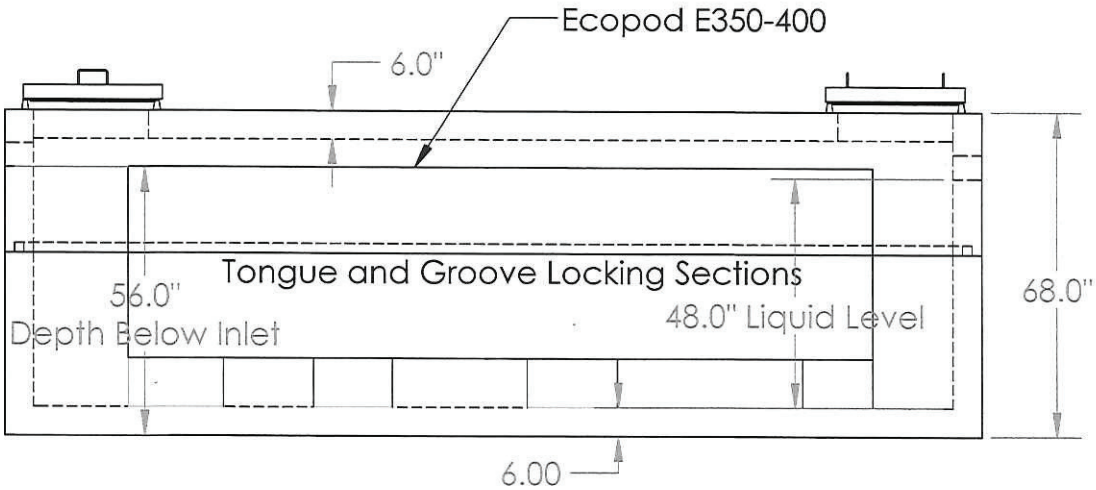

Model 4300 Gallon Setpic, Holding, Grease Interceptor

4310 gal septic
4490 gal holding
89.8 gal/in

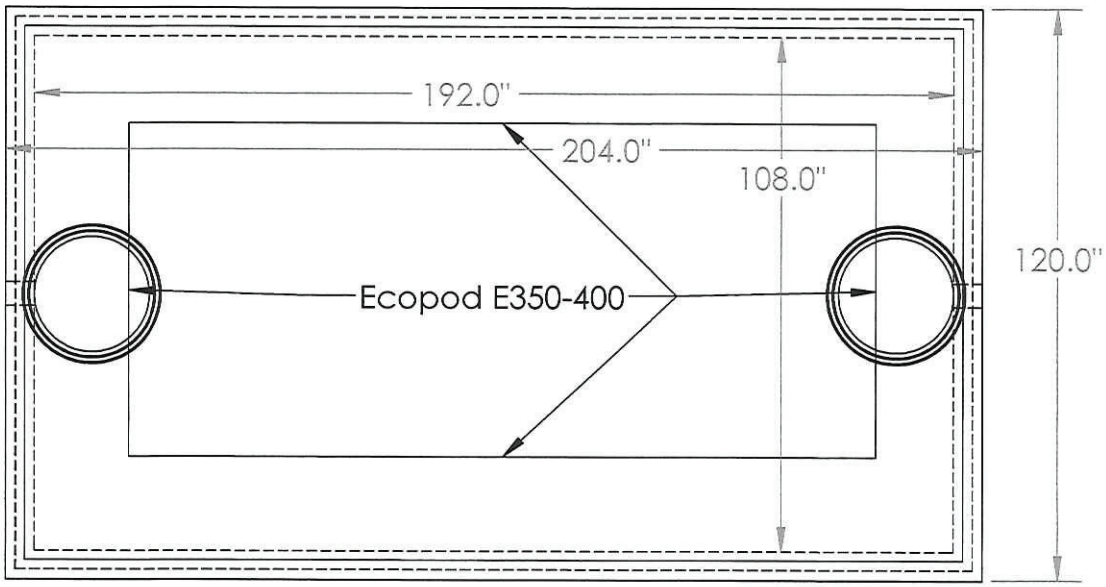

DIMENSIONS:
LENGTH - 204"
WIDTH - 120"
HEIGHT - 68"
BELOW INLET - 56"
BOTTOM SECTION WEIGHT - 23400 lb.
TOP SECTION WEIGHT - 19900 lb.
MAX DEPTH OF BURY 108"

RECEIVED
OCT 23 2012
SAFETY & BUILDINGS

Dalmaray Concrete Products Inc.
405 S. Arch St.
Janesville, WI 53548
(608)-752-6507
Toll Free:(888)-222-4541
Fax: (608)-752-5671
www.dalmarayconcreteproducts.com

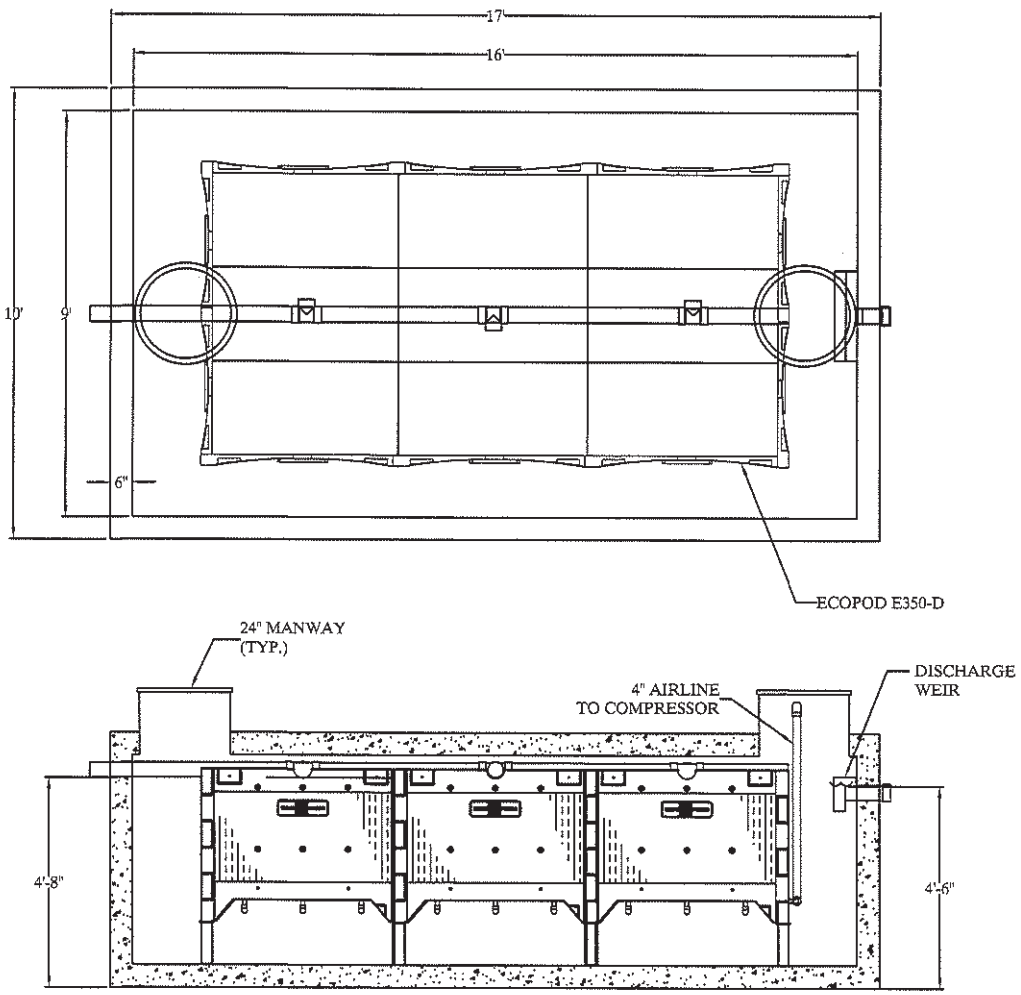

RECEIVED
OCT 23 2012
SAFETY & BUILDINGS

REV.	DATE	REVISION DESCRIPTION	BY

Delta Environmental™
Pentair Water

ECOPOD E350-D IN DALMARAY MODEL 4300 TANK

COMPANY CONFIDENTIAL: INFORMATION CONTAINED HEREIN IS CONFIDENTIAL, IT IS THE PROPERTY OF PENTAIR PUMP GROUP, IT IS TO BE USED SOLELY FOR THE PURPOSE PROVIDED, AND IT IS NOT TO BE DISCLOSED TO OTHERS WITHOUT THE PRIOR WRITTEN CONSENT OF PENTAIR PUMP GROUP.

PLOT SCALE	DRAWING NUMBER	DRAWN BY	DATE	SHEET OF	REV
NTS	DWG NO	D. WRIGHT	10/22/12	1 1	A