20120370

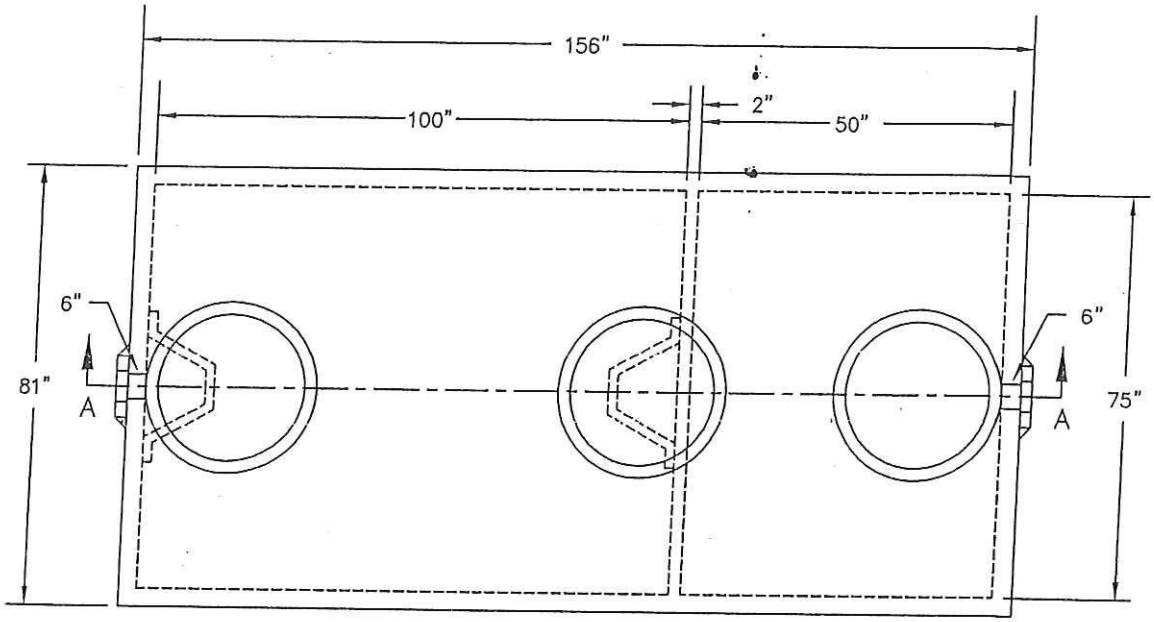

TOP VIEW

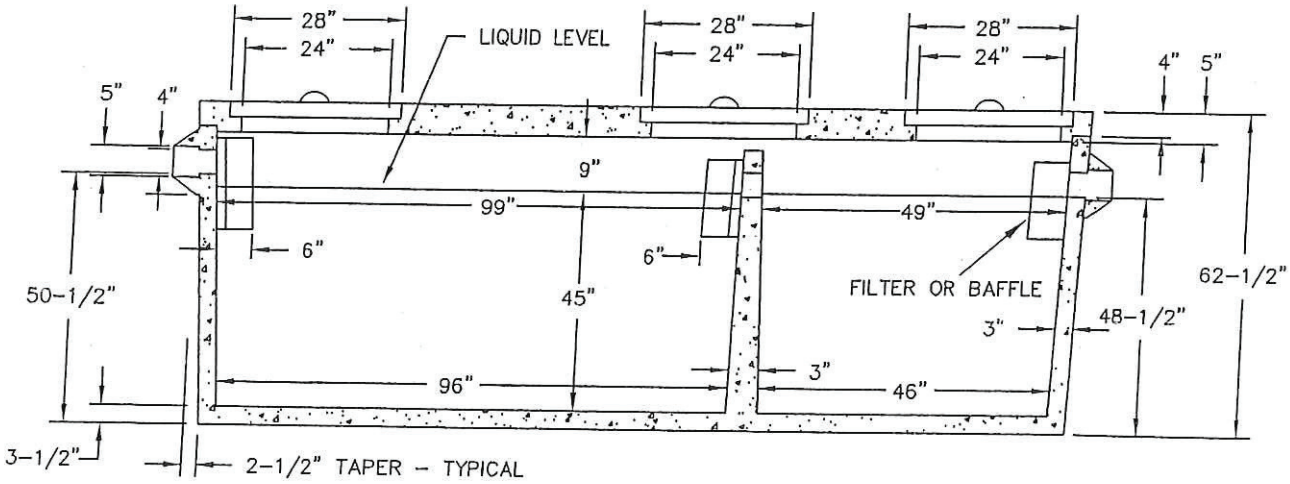

SECTION A-A

RECEIVED

OCT 29 2012

SAFETY & BUILDINGS

2000

PROCON	
MODEL 1377/671 SEPTIC/SEPTIC	
SEPTIC CAPACITY - 1377 GAL	PRODUCT FILE NO. 20050240
SEPTIC CAPACITY - 671 GAL.	EXPIRES 06/09
15.0 G.P.I.	DRAWING DATE 3-1-07